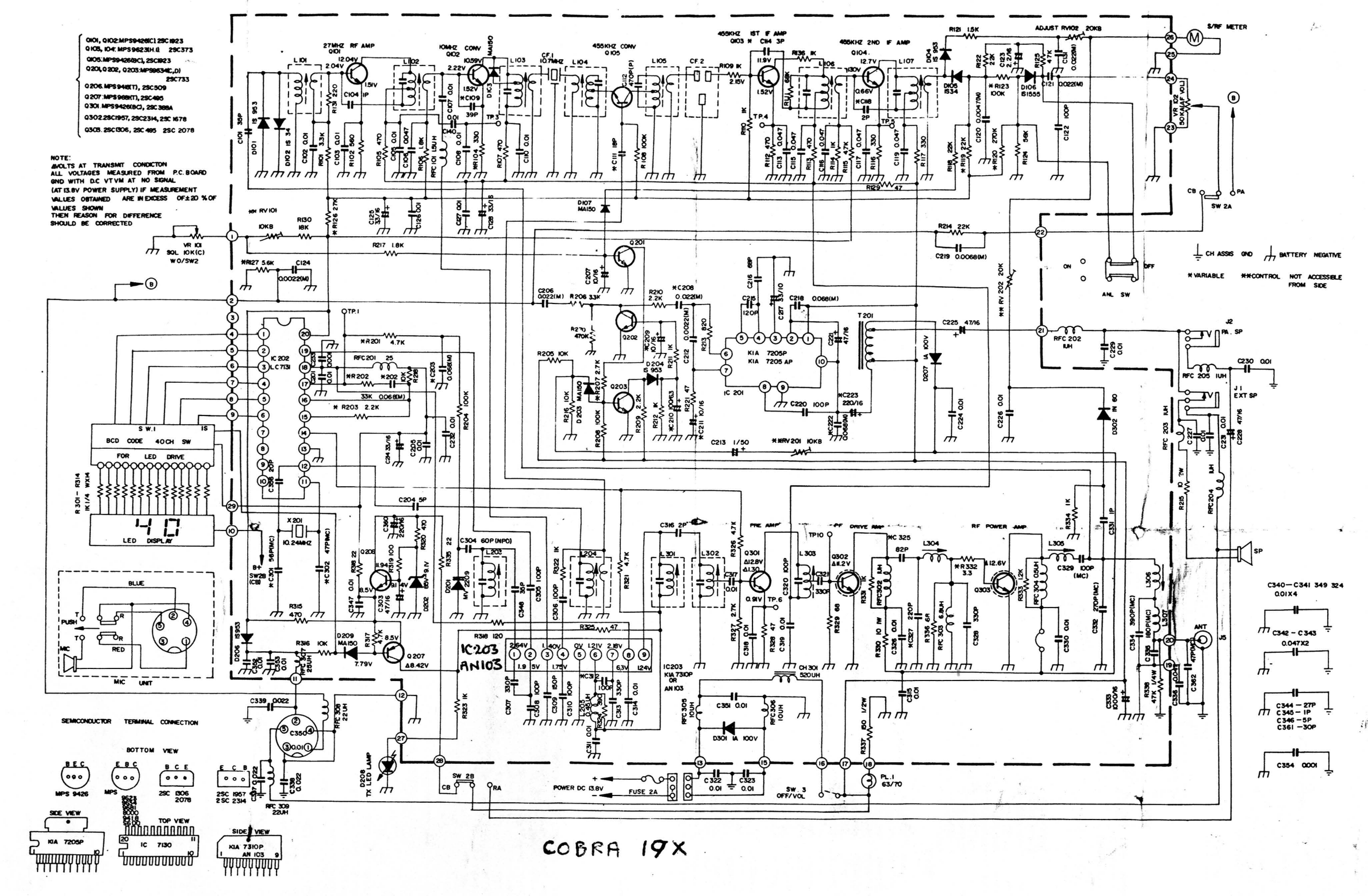
Q101, Q102: MPS9426(C) 2SC1923
Q103, 104: MPS9623(H.I) 2SC373
Q105: MPS9426(BC), 2SC1923
Q201, Q202, Q203: MPS9634(C,D) 2SC733
Q206: MPS9418(T), 2SC509
Q207: MPS9681(T), 2SC495
Q301: MPS9426(BC), 2SC388A
Q302: 2SC1957, 2SC2314, 2SC1678
Q303: 2SC1306, 2SC495 2SC2078
NOTE:
ΔVOLTS AT TRANSMIT CONDICTON
ALL VOLTAGES MEASURED FROM P.C. BOARD GND WITH D.C VTVM AT NO SIGNAL
(AT 13.8V POWER SUPPLY) IF MEASUREMENT VALUES OBTAINED ARE IN EXCESS OF ±20 % OF VALUES SHOWN
THEN REASON FOR DIFFERENCE SHOULD BE CORRECTED
27MHZ RF AMP Q101
10MHZ CONV Q102
455KHZ CONV Q105
455KHZ 1ST IF AMP Q103
455KHZ 2ND IF AMP Q104
ADJUST RV102 20KB
S/RF METER
CH ASSIS GND
BATTERY NEGATIVE
* VARIABLE
** CONTROL NOT ACCESSIBLE FROM SIDE
ANL SW
ON
OFF
IC 202 LC7131
BCD CODE 40CH SW
FOR LED DRIVE
LED DISPLAY
MIC UNIT
BLUE
PUSH
RED
MIC
IC203 AN103
IC203 KIA 7310P OR AN103
PRE AMP
RF DRIVE AMP
RF POWER AMP
ANT
J1 EXT SP
J2 PA. SP
SP
SEMICONDUCTOR TERMINAL CONNECTION
BOTTOM VIEW
MPS 9426
MPS
2SC 1306 2078
2SC 1957 2SC 2314
SIDE VIEW
TOP VIEW
KIA 7205P
IC 7130
KIA 7310P AN 103
POWER DC 13.8V
FUSE 2A
SW 3 OFF/VOL
PL.1 63/70
D208 TX LED LAMP
C340—C341 349 324 0.01X4
C342 - C343 0.047X2
C344 - 27P
C345 - 1P
C346 - 5P
C361 - 30P
C354 0.001

COBRA 19X