As you are now the owner of this document which should have come to you for free, please consider making a donation of £1 or more for the upkeep of the (Radar) website which holds this document. I give my time for free, but it costs me money to bring this document to you. You can donate here https://blunham.com/Misc/Texas

Many thanks.

Please do not upload this copyright pdf document to any other website. Breach of copyright may result in a criminal conviction.

This Acrobat document was generated by me, Colin Hinson, from a document held by me. I requested permission to publish this from Texas Instruments (twice) but received no reply. It is presented here (for free) and this pdf version of the document is my copyright in much the same way as a photograph would be. If you believe the document to be under other copyright, please contact me.

The document should have been downloaded from my website https://blunham.com/, or any mirror site named on that site. If you downloaded it from elsewhere, please let me know (particularly if you were charged for it). You can contact me via my Genuki email page: https://www.genuki.org.uk/big/eng/YKS/various?recipient=colin

You may not copy the file for onward transmission of the data nor attempt to make monetary gain by the use of these files. If you want someone else to have a copy of the file, point them at the website. (https://blunham.com/Misc/Texas). **Please do not point them at the file itself as it may move or the site may be updated.**

It should be noted that most of the pages are identifiable as having been processed by me.

I put a lot of time into producing these files which is why you are met with this page when you open the file.

If you find missing pages, pages in the wrong order, anything else wrong with the file or simply want to make a comment, please drop me a line (see above).

It is my hope that you find the file of use to you.

Colin Hinson
In the village of Blunham, Bedfordshire.

SPDU019

XDS Breakpoint/ Trace

XDS Extended Development Support
Installation and Operation Guide

TEXAS INSTRUMENTS

Texas Instruments

The information and/or drawings set forth in this document and all rights in and to inventions disclosed herein and patents which might be granted thereon disclosing or employing the materials, methods, techniques, or apparatus described herein are the exclusive property of Texas Instruments.

No disclosure of information or drawings shall be made to any other person or organization without the prior consent of Texas Instruments.

XDS Group
MS 2186
12501 Research Blvd.
Austin, Texas 78759

Part Number: 1603442-9701**
Date: 19 OCTOBER 1983
revised

IMPORTANT NOTICE

Texas Instruments reserves the right to make changes at any time in order to improve design and to supply the best product possible.

Texas Instruments assumes no responsibility for infringement of patents or rights of others based on Texas Instruments applications assistance or product specifications, since TI does not possess full access to data concerning the use or applications of customer's products. TI also assumes no responsibility for customer product designs.

Copyright © 1983 Texas Instruments Incorporated

PREFACE

The purpose of this manual is to familiarize the user with the functions and theory of the Breakpoint/Trace board. The Breakpoint/Trace Board is an optional circuit card for the XDS that greatly increases the capabilities of the system. This manual also describes installation instructions for the Breakpoint/Trace board, part numbers 2311045-0001 and 2311045-0002. The user and installer should read this manual before attempting to operate or install the Breakpoint/trace board. If the Breakpoint/Trace board is removed form the XDS, this manual should be kept with the board for reference during future installation.

TABLE of CONTENTS

Paragraph	Title	Page
	PREFACE	
	SECTION 1 INSTALLATION	
1.1	INTRODUCTION	1-1
1.1.1	Board Preperation and Installation	1-1
1.1.1.1	Board Configuration	1-1
1.1.2	Board Installation	1-2
1.1.2.1	Extended Trace Cable Installation	1-4
1.1.2.2	Installation Completion	1-4
	SECTION 2 HARDWARE FEATURES	
2.1	INTRODUCTION	2-1
2.1.1	Status Indicator Lights	2-1
2.1.2	Extended Trace Probe	2-1
2.1.3	Power Requirements	2-1
	SECTION 3 THEORY OF OPERATION	
3.1	INTRODUCTION	3-1
3.1.1	Break Point Capability	3-1
3.1.2	Tracing Capability	3-1
3.1.3	Block Diagram	3-1
	APPENDIX A Breakpoint/Trace Board Schematics	

LIST of TABLES

Table	Title	Page
1-1	Breakpoint/Trace Board Configurations	1-2
1-2	Chassis Configuraiton Label Information	1-4
2-1	Extended Trace Probe Color Code	2-2
2-2	Breakpoint/Trace DC Power Requirements	2-2

LIST of FIGURES

Figure	Title	Page
1-1	Breakpoint/Trace Board PN 2311045	1-3
3-1	Breakpoint/trace Board Block Diagram	3-2

SECTION 1

INSTALLATION

1.1 INTRODUCTION

The breakpoint/Trace board is an option that significantly increases the emulationg power of the XDS, (Extended Development Support System). Some of this increaded performance includes being able to set a breakpoint on any memory access (read or write), breakpoint on an instruction opcode, and breakpoint on any I/O or CRU (Communications Regiter Unit) access (address and data can be specified). Alos, the Breakpoint/Trace board allows the user to trace the execution of a system under test by storing all the mecessary information of address and/or data in memory, and then displaying it after stopping at a breakpoint. More information on the use of the breakpoint/trace board is available in the emulator user's guide. Refer to this section if the board is not installed or if it is to be moved. Also refer to this seciton if you wish to change the board options.

1.1.1 Board Preperation and Installation.

The Breakpoint/Trace board can be configured so that it can support the major portion of the XDS system emulators. When installing the breakpoint/trace board you should check the type of emulator it is being used with to determin if a conversion is required.

1.1.1.1 Board Configuration.

The Breakpoint/Trace board is available in two configurations. Table 1-1 describes which configuration is used with each emulator system. The part number of the breakpoint/trace board determines how the board is configured and which emulators it will support. You should be sure and update the board's part number is the configuration of the board is changed. The board may be field converted from a 2311045-0001 to a 2311045-0002 by changing the 74ALS573 devices in locations U3 through U8 to 74ALS574 devices. Of course a 2311045-0002 may be converted to a 2311045-0001. Table 1-1 describes which devices are used on each configuration of the board. The location of the devices are shown in Figure 1-1 and they are installed in sockets

so no soldering is required.

Table 1-1 Breakpoint/Trace Board Configurations

Part Number	Emulator Type	Device Type Locations U3 - U8
2311045-0001	TMS7000	74ALS573
2311045-0001	TMS9995	74ALS573
2311045-0002	TMS32010	74ALS574
2311045-0002	TMS99000	74ALS574

1.1.2 Board Installation.

CAUTION

BEFORE INSTALLING OR REMOVING ANY BOARD, TURN OFF THE POWER TO THE XDS UNIT.

The XDS Model XX Installation and Operation Guide describes the procedure for installing or removing boards from the XDS unit. Refer to the manual appropriate for the XDS Model you are using. If an breakpoint/trace board is currently installed in the XDS it must be removed before another one can be installed. Only one breakpoint/trace board can be installed at any one time for the XDS to funciton properly. Tme breakpoint/trace board must be installed in slot number 1.

Boards removed from the chassis should be stored so that they are protected from static discharge. Erase the board information on the chassis configuration label for each circuit board removed.

For the Breakpoint/Trace board enter the following information on the chassis configuration label for slot number 1 as given in Table 1-2.

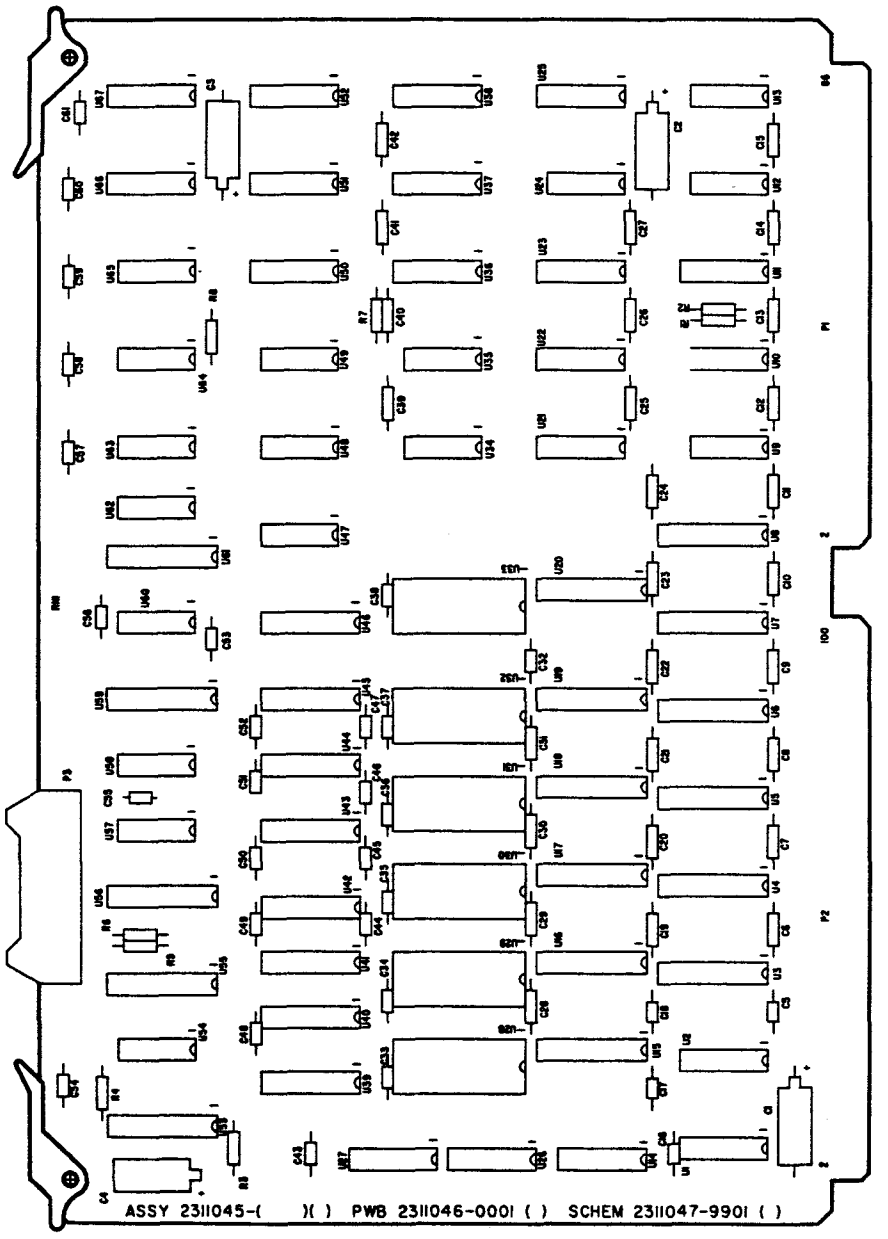

Figure 1-1 Breakpoint/Trace Board PN 2311045

Table 1-2 Chassis Configuraiton Label Information

Block Title	Information to be Entered
PWB Description	BREAKPOINT/TRACE
Part No	2311045-0001 OR 2311045-0002
REV	ENTER REVISION LETTER FRON BREAKPOINT/TRACE BOARD.

1.1.2.1 Extended Trace Cable Installation.

To complete the installation of the breakpoint/trace board the extended trace cable (PN 2232136-0001 must be installed. This cable plugs into the board via connector P3 on the edge of the board. Refer to Figure 1-1 for the location of P3. Note that the extedned trace cable is held in place by the target cable clamp and that theis clamp must be removed before installing or removing the breakpoint/trace board. When the exteded trace cable has been installed, restore the target cable clamp to its position to secure the extended trace cable. Refer to the appropriate XDS installation and operation manual for instructions on installing the target cable clamp.

The extended trace cable has an extended trace probe (PN 2232139-0001) which plugs on to the end of the cable. This probe may be connected or disconnected at any time during an operating session. You may find is desireable to disconnect the probe when it is not in use or to move the target system. When the Probe is disconnected it should be kept in a safe place.

1.1.2.2 Installation Completion.

Complete the installation according to the information in the appropriate XDS installation and operation Guide.

CAUTION

DO NOT OPERATE THE XDS UNIT WITH THE FRONT PANEL REMOVED. THE FRONT PANEL IS REQUIRED FOR PROPER AIR CIRCULATION AND COOLING OF THE CIRCUIT BOARDS. THE FRONT PANEL IS ALSO REQUIRED TO PREVENT LEAKAGE OF RFI/EMI RADIATION.

Restore power to the XDS unit. Refer to the appropriate emulator user's guide for further instructions on operating the XDS.

SECTION 2

HARDWARE FEATURES

2.1 INTRODUCTION

The breakpoint/trace board operates primarily with the emulator software that is referenced in the appropriate emulator user's guide. Also the features and applications of the extended trace cable are discussed in the emulators user's guide. The status lignts and power requirements are discussed below for the breakpoint/trace board.

2.1.1 Status Indicator Lights.

The XDS has four status indicator lights that are located on the fornt panel of the XDS. The Breakpoint/Trace board is required for sstatus light number one to function. The meaning of this light may differ for different emulators but the breakpoint/trace board controls it. If the breakpoint/trace board is not installed this light will not operate.

2.1.2 Extended Trace Probe.

The extended trace probe is color coded to enable you to keep track of each line. Table 2-1 relates the color code to data bit numbers.

2.1.3 Power Requirements.

The DC power requirements for the Breakpoint/Trace board are given in Table 2-2. This information may be used to calculate the total DC power requirements of the XDS system. When adding new boards to the system this DC Power calculation should be made to ensure that the XDS power supply will not be overloaded. Refer to the XDS Installation and Operation Manual for the power supply rating information, and the power requirements for the other circuit boards may be obtained from their appropriate reference manuals.

Table 2-1 Extended Trace Probe Color Code

Data Bit	Number	Color of Line
MSB	7	Violet
	6	Blue
	5	Green
	4	Yellow
	3	Orange
	2	Red
	1	Brown
LSB	0	Black
Ground		White

Table 2-2 Breakpoint/Trace DC Power Requirements

+ 5 VOLTS (AMPS)	+ 12 VOLTS (AMPS)	- 12 VOLTS (AMPS)
2.00	0	0

SECTION 3

THEORY OF OPERATION

3.1 INTRODUCTION

The breakpoint/trace board can be seperated into two basic sections: Break Point capability, and Tracing capability. This section will briefly discuss these capabilities and show a block diagram of the breakpoint/trace board.

3.1.1 Break Point Capability.

A break point is a hardware interrupt which causes emulator control to be passed back to the user, and is used to stop the emulator when it has been put into execution mode. You must set up the breakpoint options before executing a program. On power up the emulators disables the breakpoint/trace board until the user issues a breakpoint or trace command to initialize the breakpoint/trace board.

3.1.2 Tracing Capability.

The trace capability provides a record of the machine cycles that occured during the execution of a program. Each machine cycle, when it qualifies is stored in the trace buffer so that it can be recalled for examination at a later time.

3.1.3 Block Diagram.

Figure 3-1 shows a block diagram of the breakpoint trace board. The major blocks are the trace memory amd the data bus.

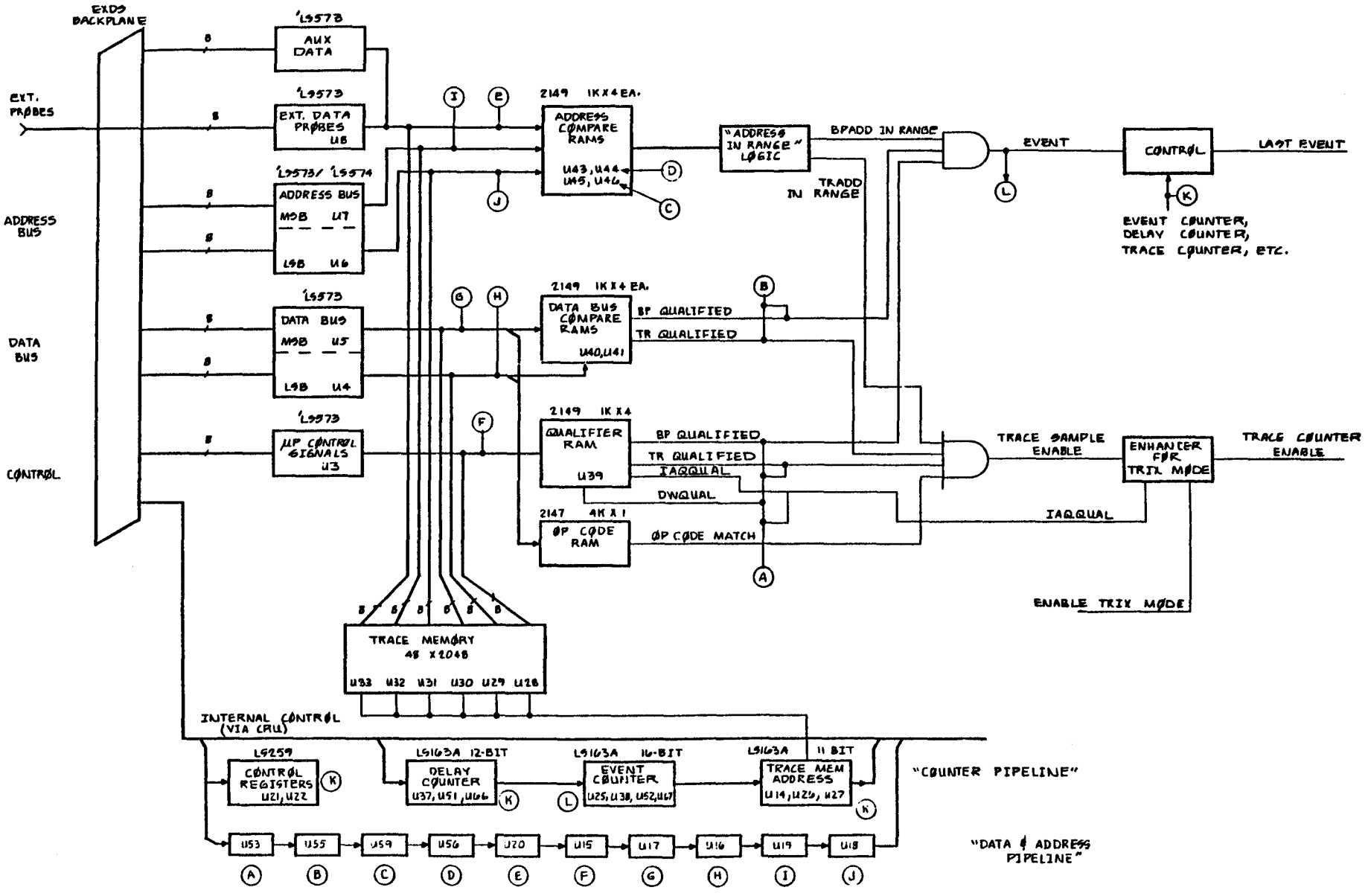

Figure 3-1 Breakpoint/trace Board Block Diagram

APPENDIX A

Breakpoint/Trace Board Schematics

DWG NO 2311047 SH 1

REVISIONS

REV	DESCRIPTION	DATE	APPROVED

NOTES: UNLESS OTHERWISE SPECIFIED:

1. ALL DEVICE TYPES ARE PREFIXED WITH SN74.
2. VCC IS APPLIED TØ PIN 8 ØF ALL 8-PIN IC'S, PIN 14 ØF ALL 14-PIN IC'S, PIN 16 ØF ALL 16-PIN IC'S, PIN 20 ØF ALL 20-PIN IC'S, ETC.
3. GRØUND IS APPLIED TØ PIN 4 ØF ALL 8-PIN IC'S, PIN 7 ØF ALL 14-PIN IC'S, PIN 8 ØF ALL 16-PIN IC'S, PIN 10 ØF ALL 20-PIN IC'S, ETC.
4. DEVICE TYPE, PIN NUMBERS, AND REFERENCE DESIGNATØR ØF IC IS SHØWN AS FØLLØWS:

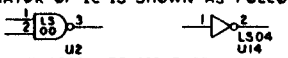

LS00 AND LS04 = DEVICE TYPE
1, 2, AND 3 = PIN NUMBERS
U2 AND U14 = REFERENCE DESIGNATØR

5. RESISTANCE VALUES ARE IN ØHMS.
6. RESISTØRS ARE 1/4 WATT, 5%.
7. CAPACITANCE VALUES ARE IN MICRØFARADS.
8. U1, U2, U10 AND U11 ARE ØPEN IC LØCATIØNS.
9. MSB / LSB DEFINITIØNS:
   A00 = MSB DB00 = MSB
   A15 = LSB DB15 = LSB

-3 QTY	-2 QTY	-1 QTY	ITEM NO	PART OR IDENTIFYING NUMBER	NOMENCLATURE OR DESCRIPTION	NOTES

PARTS LIST

UNLESS OTHERWISE SPECIFIED
- DIMENSIONS ARE IN MILLIMETERS
- TOLERANCES: 2 PLACE DECIMALS ± 0.25, 1 PLACE DECIMALS ± 0.5, ANGLES ± 1°
- INTERPRET DRAWING PER DOD-D-1000
- REMOVE ALL BURRS AND SHARP EDGES
- CONCENTRICITY MACHINED DIAMETERS 0.25 FIM
- DIMENSIONAL LIMITS APPLY BEFORE PROCESSING
- PARENTHETICAL INFO FOR REF ONLY

HOLE TOLERANCE: 0.32 THRU 3.10 +0.10/-0.05; 3.20 THRU 6.35 +0.13/-0.05; 6.38 THRU 12.70 +0.15/-0.05; 12.73 THRU 19.05 +0.20/-0.05; 19.08 THRU 25.40 +0.25/-0.05; 25.43 THRU 50.80 +0.30/-0.05

THIRD ANGLE PROJECTION

DWN	C. KEELER 1-3-83
CHK	C. KEELER 4-4-83
ENGR	[signature] 7-6-83
APPD	[signature] 7-8-83
QA	[signature] 7-8-83
APPD-MFG	[signature] 7-8-83
FILE	

TEXAS INSTRUMENTS INCORPORATED
Digital Systems Group

SI-METRIC

LØGIC DIAGRAM, B/T CARD

SIZE	FSCM NO	DRAWING NO
D	06668	2311047

SCALE NONE SHEET 1 OF 11

NEXT ASSY	USED ON
2311045	7119

APPLICATION

SEQ NO	IDENT	F-SPEC	NO	ADDITIONAL	NOTES
	PROCESS			CLASSIFICATION	

PROCESSES — FOR CORRELATION TO GOVT/IND SPECIFICATIONS. SEE TI DRAWING 729487

REV STATUS OF SHEETS

REV											
SH	1	2	3	4	5	6	7	8	9	10	11

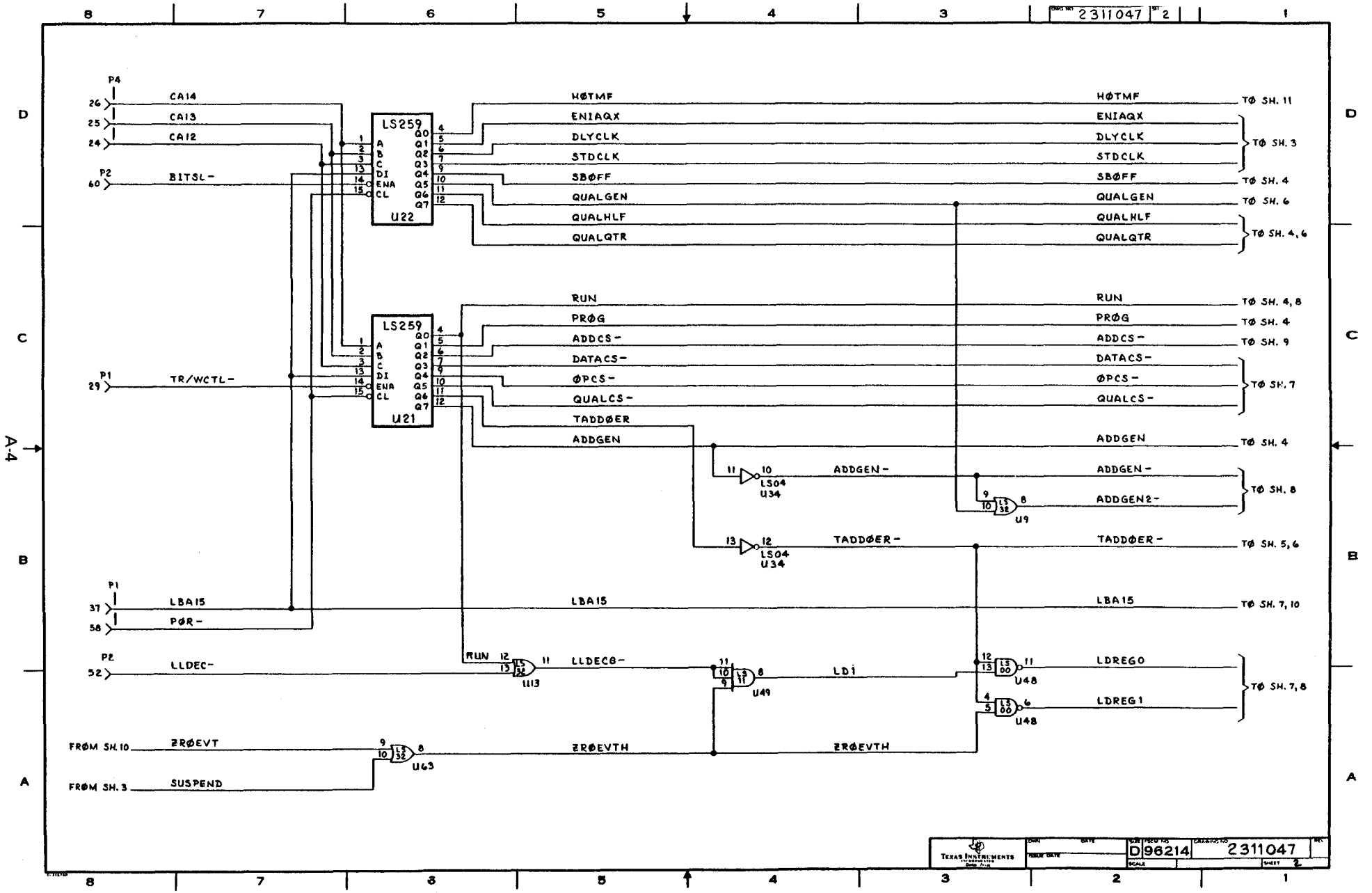

2311047
2
P4
CA14
CA13
CA12
P2
BITSL-
P1
TR/WCTL-
P1
LBA15
PØR-
P2
LLDEC-
FRØM SH. 10
ZRØEVT
FRØM SH. 3
SUSPEND
LS259
U22
LS259
U21
HØTMF
ENIAQX
DLYCLK
STDCLK
SBØFF
QUALGEN
QUALHLF
QUALQTR
RUN
PRØG
ADDCS-
DATACS-
ØPCS-
QUALCS-
TADDØER
ADDGEN
ADDGEN-
TADDØER-
LBA15
LLDECG-
LD1
ZRØEVTH
LS04
U34
U9
U13
U49
U48
U63
TØ SH. 11
TØ SH. 3
TØ SH. 4
TØ SH. 6
TØ SH. 4, 6
TØ SH. 4, 8
TØ SH. 4
TØ SH. 9
TØ SH. 7
TØ SH. 4
TØ SH. 8
TØ SH. 5, 6
TØ SH. 7, 10
LDREG0
LDREG1
TØ SH. 7, 8
TEXAS INSTRUMENTS
D
96214
2311047

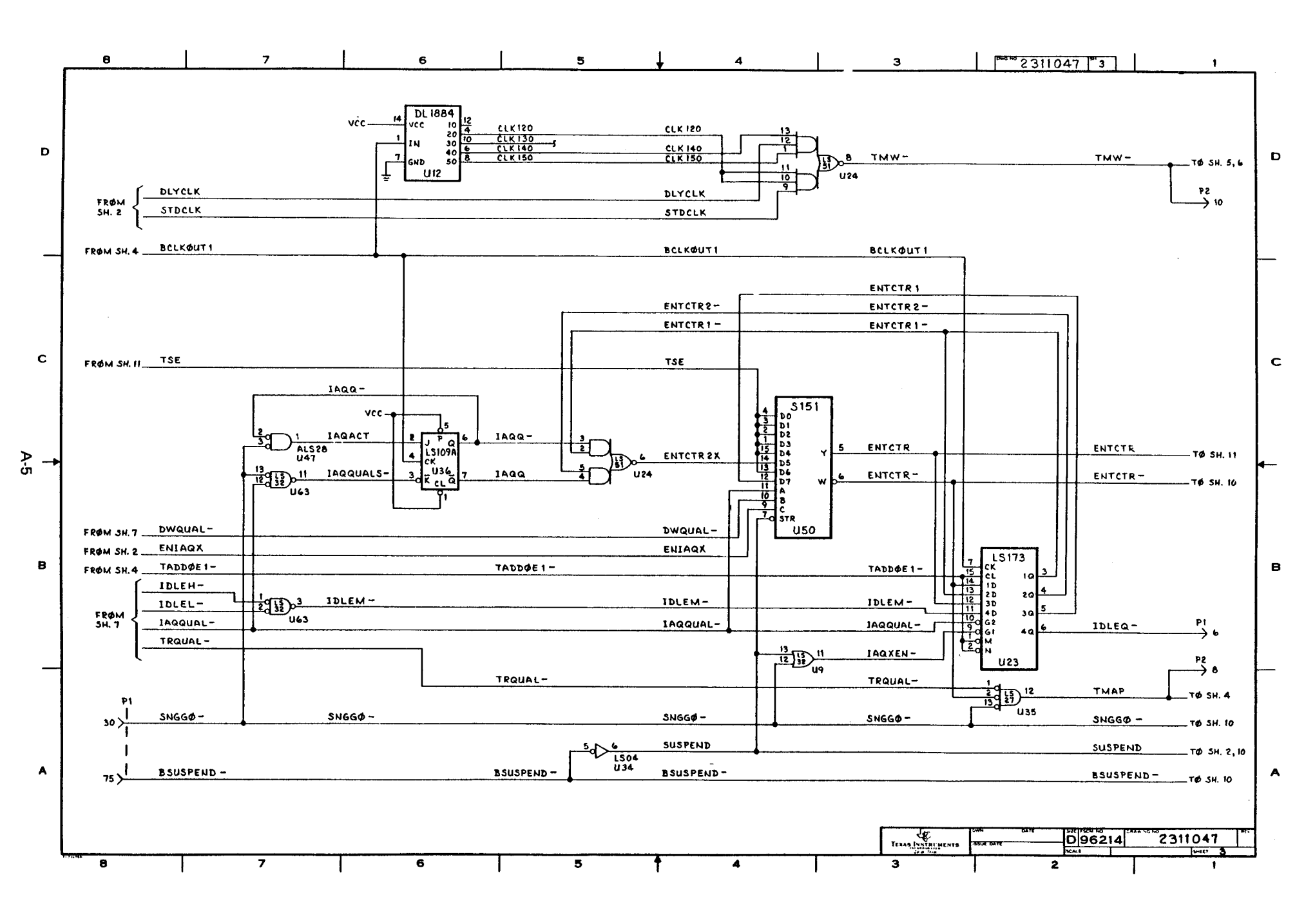
2311047 3
DL1884
U12
VCC
CLK120
CLK130
CLK140
CLK150
LS31
U24
TMW-
TØ SH. 5, 6
P2
10
FROM SH. 2
DLYCLK
STDCLK
FROM SH. 4
BCLKØUT1
FROM SH. 11
TSE
IAQQ-
IAQACT
ALS28
U47
LS109A
U36
IAQQUALS-
IAQQ
U63
ENTCTR1
ENTCTR2-
ENTCTR1-
ENTCTR2X
S151
U50
ENTCTR
ENTCTR-
TØ SH. 11
TØ SH. 10
FROM SH. 7
DWQUAL-
FROM SH. 2
ENIAQX
FROM SH. 4
TADDØE1-
IDLEH-
IDLEL-
IAQQUAL-
TRQUAL-
IDLEM-
LS173
U23
IDLEQ-
P1
6
IAQXEN-
U9
P2
8
TMAP
TØ SH. 4
U35
SNGGØ-
TØ SH. 10
P1
30
75
BSUSPEND-
LS04
U34
SUSPEND
TØ SH. 2, 10
TØ SH. 10
TEXAS INSTRUMENTS
D96214
2311047
SHEET 3
A-5

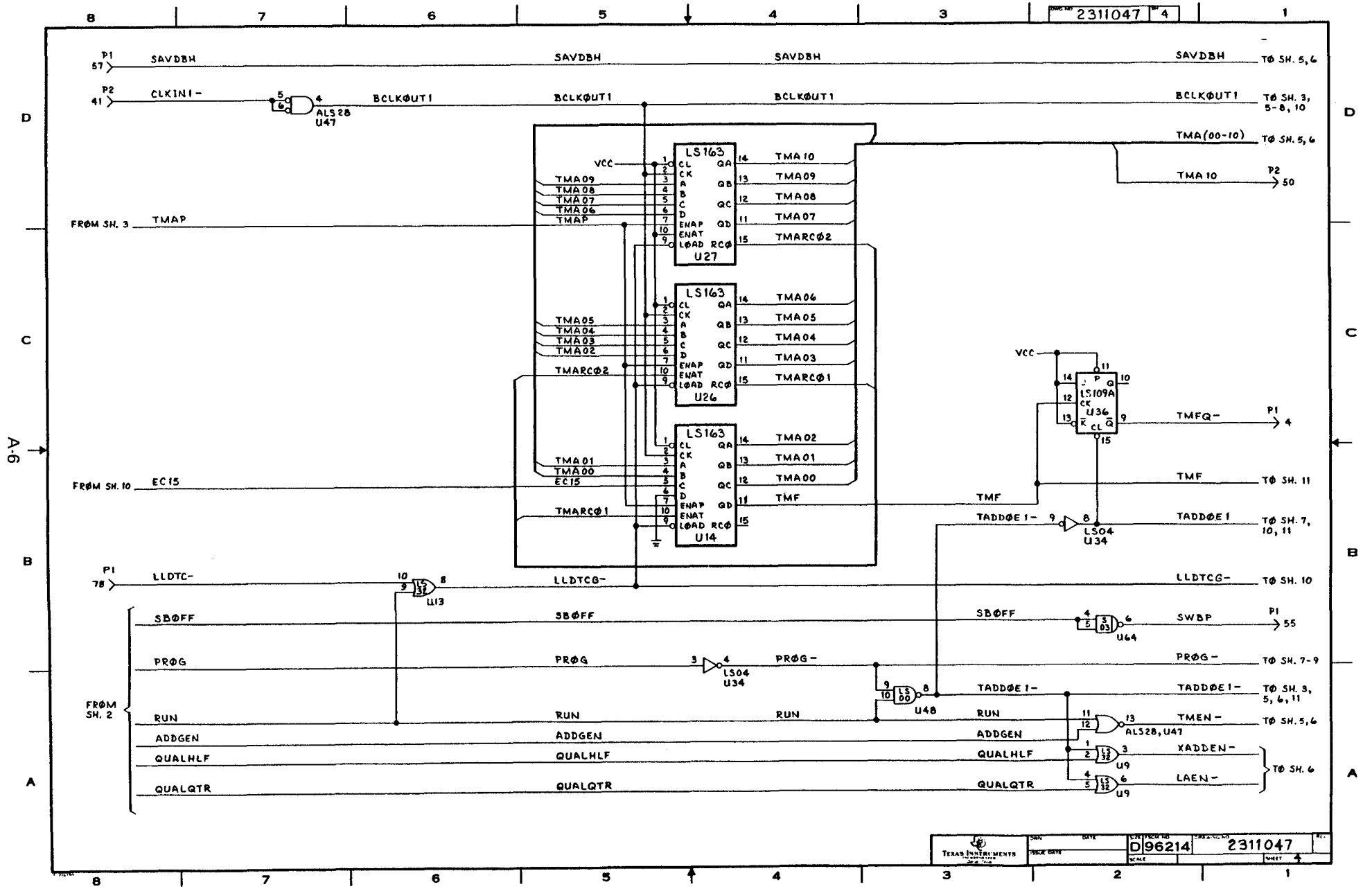
2311047 4
P1 57 SAVDBH
SAVDBH
SAVDBH
SAVDBH TØ SH. 5, 6
P2 41 CLKIN1-
ALS28 U47
BCLKØUT1
BCLKØUT1
BCLKØUT1
BCLKØUT1 TØ SH. 3, 5-8, 10
TMA(00-10) TØ SH. 5, 6
TMA10 P2 50
VCC
LS163 U27
TMA09
TMA08
TMA07
TMA06
TMAP
FROM SH. 3 TMAP
TMA10
TMA09
TMA08
TMA07
TMARCØ2
LS163 U26
TMA05
TMA04
TMA03
TMA02
TMARCØ2
TMA06
TMA05
TMA04
TMA03
TMARCØ1
LS163 U14
TMA01
TMA00
EC15
FROM SH. 10 EC15
TMA02
TMA01
TMA00
TMF
TMARCØ1
VCC
LS109A U36
TMFQ- P1 4
TMF
TMF TØ SH. 11
TADDØE1-
LS04 U34
TADDØE1 TØ SH. 7, 10, 11
P1 78 LLDTC-
LL13
LLDTCG-
LLDTCG-
LLDTCG- TØ SH. 10
SBØFF
SBØFF
SBØFF
U64
SWBP P1 55
PRØG
PRØG
LS04 U34
PRØG-
PRØG-
PRØG- TØ SH. 7-9
FROM SH. 2
RUN
RUN
RUN
U48
TADDØE1-
TADDØE1- TØ SH. 3, 5, 6, 11
RUN
ADDGEN
QUALHLF
QUALQTR
ADDGEN
QUALHLF
QUALQTR
TMEN-
ALS28, U47
TMEN- TØ SH. 5, 6
XADDEN-
LAEN-
U9
TØ SH. 6
TEXAS INSTRUMENTS
D 96214
2311047
SHEET 4

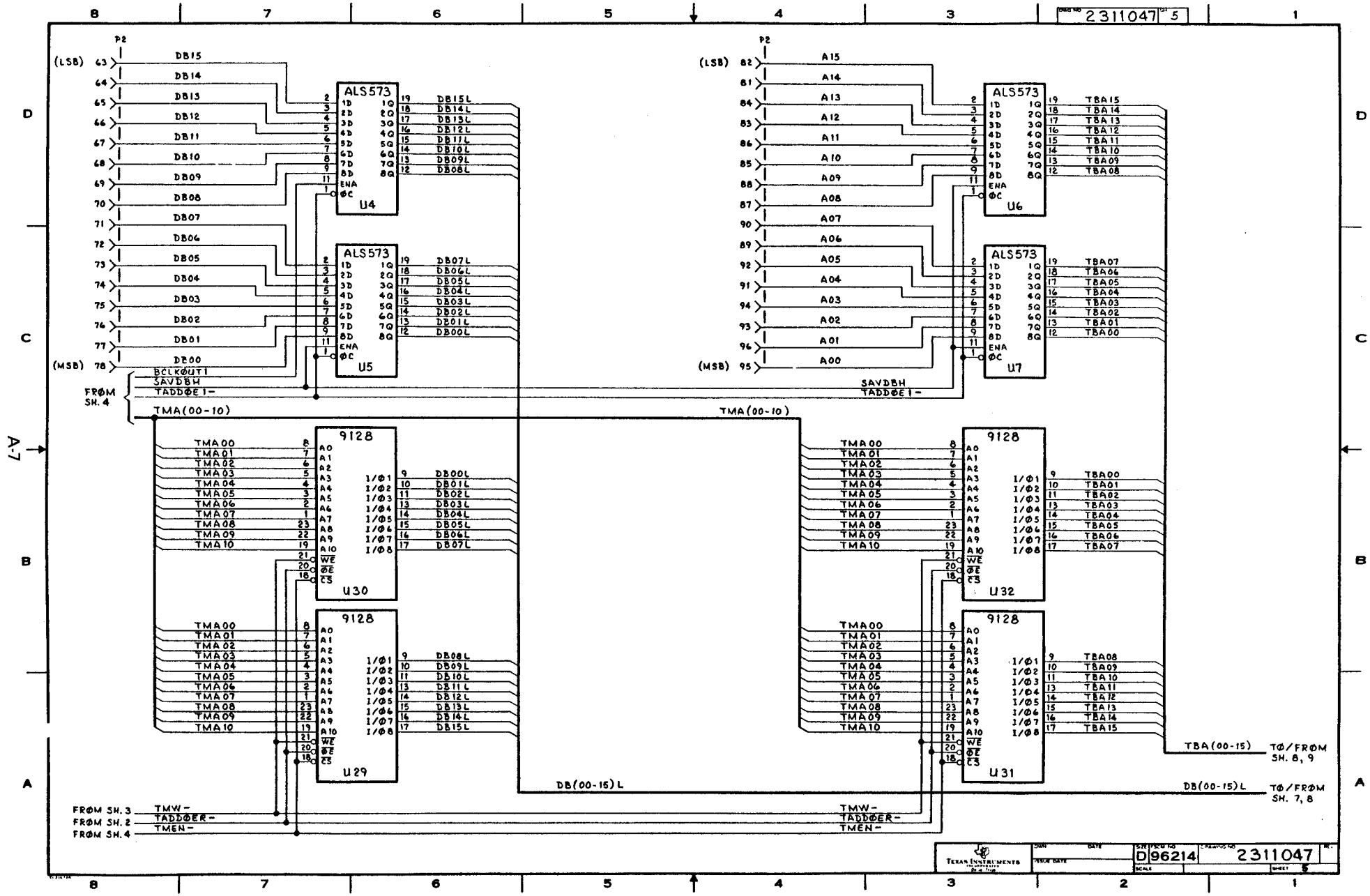
DWG NO 2311047 SH 5
P2
(LSB) 63 DB15
64 DB14
65 DB13
66 DB12
67 DB11
68 DB10
69 DB09
70 DB08
71 DB07
72 DB06
73 DB05
74 DB04
75 DB03
76 DB02
77 DB01
(MSB) 78 DB00
ALS573
U4
U5
DB15L DB14L DB13L DB12L DB11L DB10L DB09L DB08L
DB07L DB06L DB05L DB04L DB03L DB02L DB01L DB00L
BCLKOUT1
SAVDBH
TADDØE1-
FROM SH. 4
TMA(00-10)
9128
U30
U29
TMA00 TMA01 TMA02 TMA03 TMA04 TMA05 TMA06 TMA07 TMA08 TMA09 TMA10
DB00L DB01L DB02L DB03L DB04L DB05L DB06L DB07L
DB08L DB09L DB10L DB11L DB12L DB13L DB14L DB15L
WE ØE CS
FROM SH. 3 TMW-
FROM SH. 2 TADDØER-
FROM SH. 4 TMEN-
DB(00-15)L
P2
(LSB) 82 A15
81 A14
84 A13
83 A12
86 A11
85 A10
88 A09
87 A08
90 A07
89 A06
92 A05
91 A04
94 A03
93 A02
96 A01
(MSB) 95 A00
U6
U7
TBA15 TBA14 TBA13 TBA12 TBA11 TBA10 TBA09 TBA08
TBA07 TBA06 TBA05 TBA04 TBA03 TBA02 TBA01 TBA00
SAVDBH
TADDØE1-
TMA(00-10)
U32
U31
TBA00 TBA01 TBA02 TBA03 TBA04 TBA05 TBA06 TBA07
TBA08 TBA09 TBA10 TBA11 TBA12 TBA13 TBA14 TBA15
TBA(00-15) TØ/FROM SH. 8, 9
DB(00-15)L TØ/FROM SH. 7, 8
TMW-
TADDØER-
TMEN-
TEXAS INSTRUMENTS
D 96214
2311047
SHEET 5
A-7

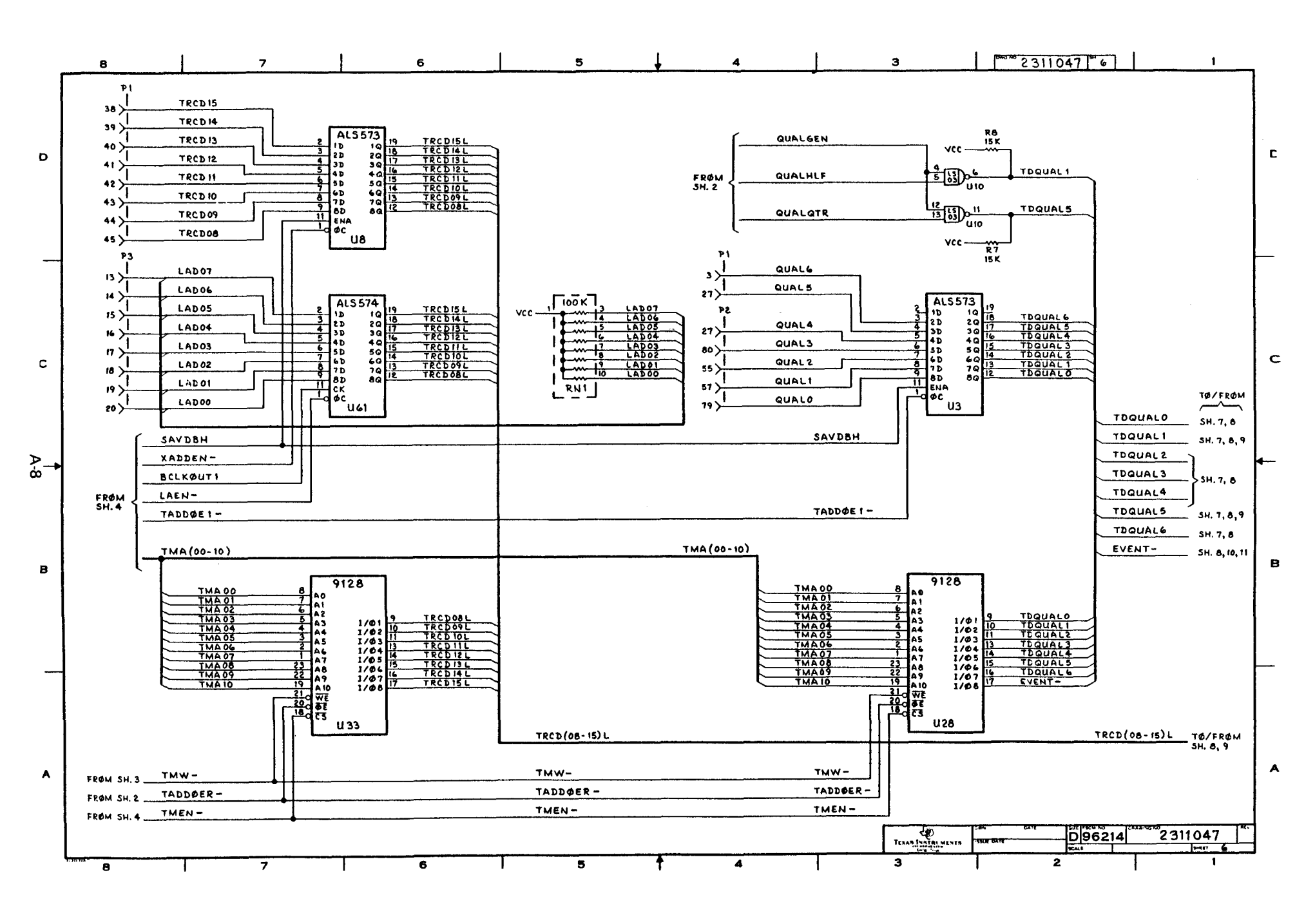
2311047
P1
TRCD15
TRCD14
TRCD13
TRCD12
TRCD11
TRCD10
TRCD09
TRCD08
ALS573
U8
TRCD15L
TRCD14L
TRCD13L
TRCD12L
TRCD11L
TRCD10L
TRCD09L
TRCD08L
P3
LAD07
LAD06
LAD05
LAD04
LAD03
LAD02
LAD01
LAD00
ALS574
U61
100K
RN1
VCC
QUALGEN
QUALHLF
QUALQTR
FROM SH. 2
R8 15K
R7 15K
U10
TDQUAL1
TDQUAL5
QUAL6
QUAL5
QUAL4
QUAL3
QUAL2
QUAL1
QUAL0
P2
U3
TDQUAL6
TDQUAL5
TDQUAL4
TDQUAL3
TDQUAL2
TDQUAL1
TDQUAL0
TØ/FRØM
SH. 7, 8
SH. 7, 8, 9
SH. 7, 8
SH. 7, 8, 9
SH. 7, 8
EVENT-
SH. 8, 10, 11
SAVDBH
XADDEN-
BCLKØUT1
LAEN-
TADDØE1-
FROM SH. 4
TMA(00-10)
9128
U33
U28
TMA00
TMA01
TMA02
TMA03
TMA04
TMA05
TMA06
TMA07
TMA08
TMA09
TMA10
TRCD08L
TRCD09L
TRCD10L
TRCD11L
TRCD12L
TRCD13L
TRCD14L
TRCD15L
TDQUAL0
TDQUAL1
TDQUAL2
TDQUAL3
TDQUAL4
TDQUAL5
TDQUAL6
EVENT-
TRCD(08-15)L
TRCD(08-15)L
TØ/FRØM SH. 8, 9
FROM SH. 3
FROM SH. 2
FROM SH. 4
TMW-
TADDØER-
TMEN-
D96214
2311047
SHEET 6

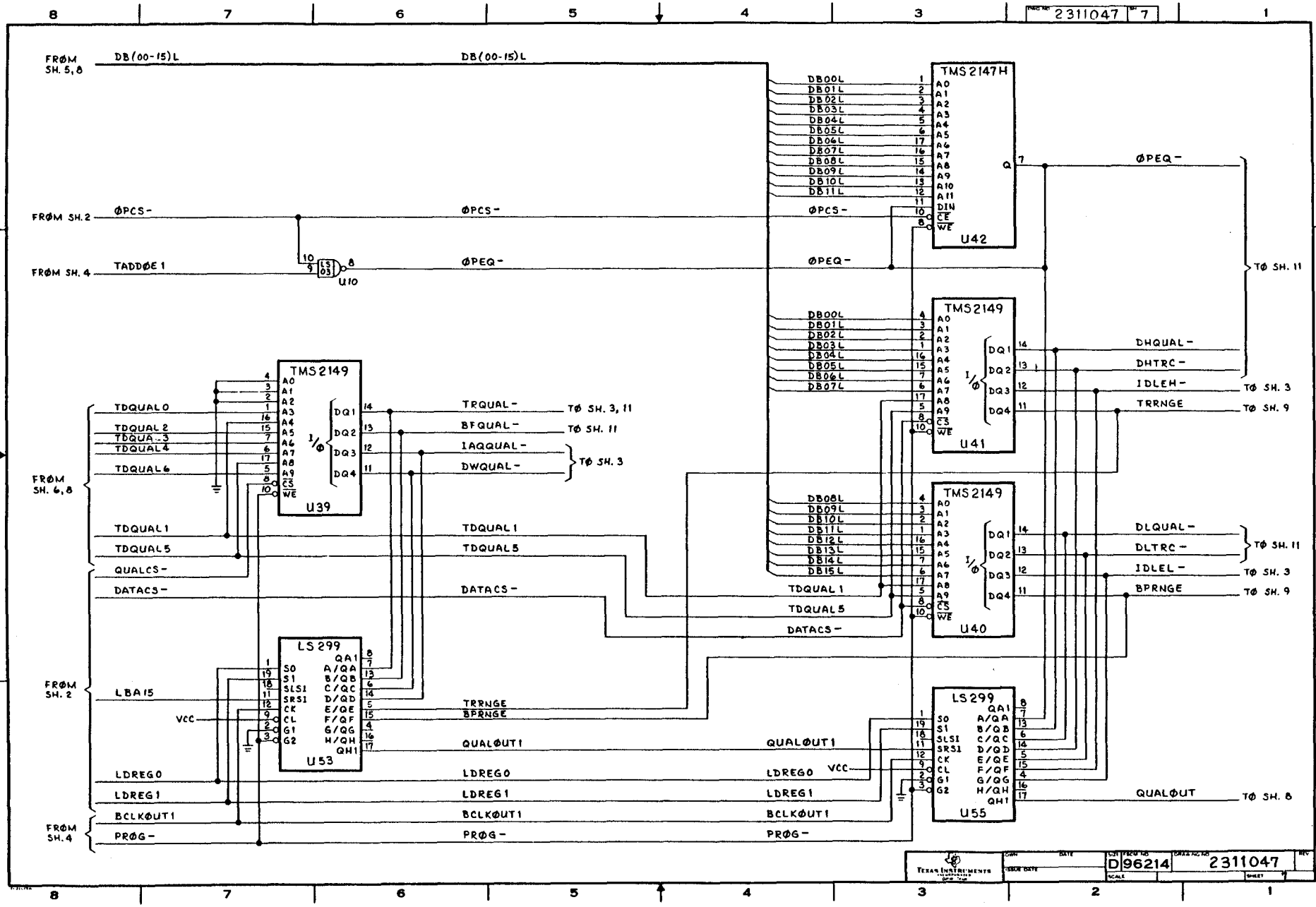
2311047 7
FROM SH. 5,8
DB(00-15)L
DB(00-15)L
FROM SH. 2
ØPCS-
ØPCS-
FROM SH. 4
TADDØE1
ØPEQ-
U10
TMS2147H
U42
ØPEQ-
TØ SH. 11
TMS2149
U41
DHQUAL-
DHTRC-
IDLEH-
TRRNGE
TØ SH. 3
TØ SH. 9
TMS2149
U39
TDQUAL0
TDQUAL2
TDQUA.3
TDQUAL4
TDQUAL6
TRQUAL-
BFQUAL-
IAQQUAL-
DWQUAL-
TØ SH. 3, 11
TØ SH. 11
TØ SH. 3
FROM SH. 6,8
TMS2149
U40
DLQUAL-
DLTRC-
IDLEL-
BPRNGE
TØ SH. 11
TØ SH. 3
TØ SH. 9
TDQUAL1
TDQUAL5
QUALCS-
DATACS-
LS299
U53
LS299
U55
FROM SH. 2
LBA15
VCC
TRRNGE
BPRNGE
QUALØUT1
LDREGØ
LDREG1
BCLKØUT1
PRØG-
FROM SH. 4
QUALØUT
TØ SH. 8
TEXAS INSTRUMENTS
D96214
2311047

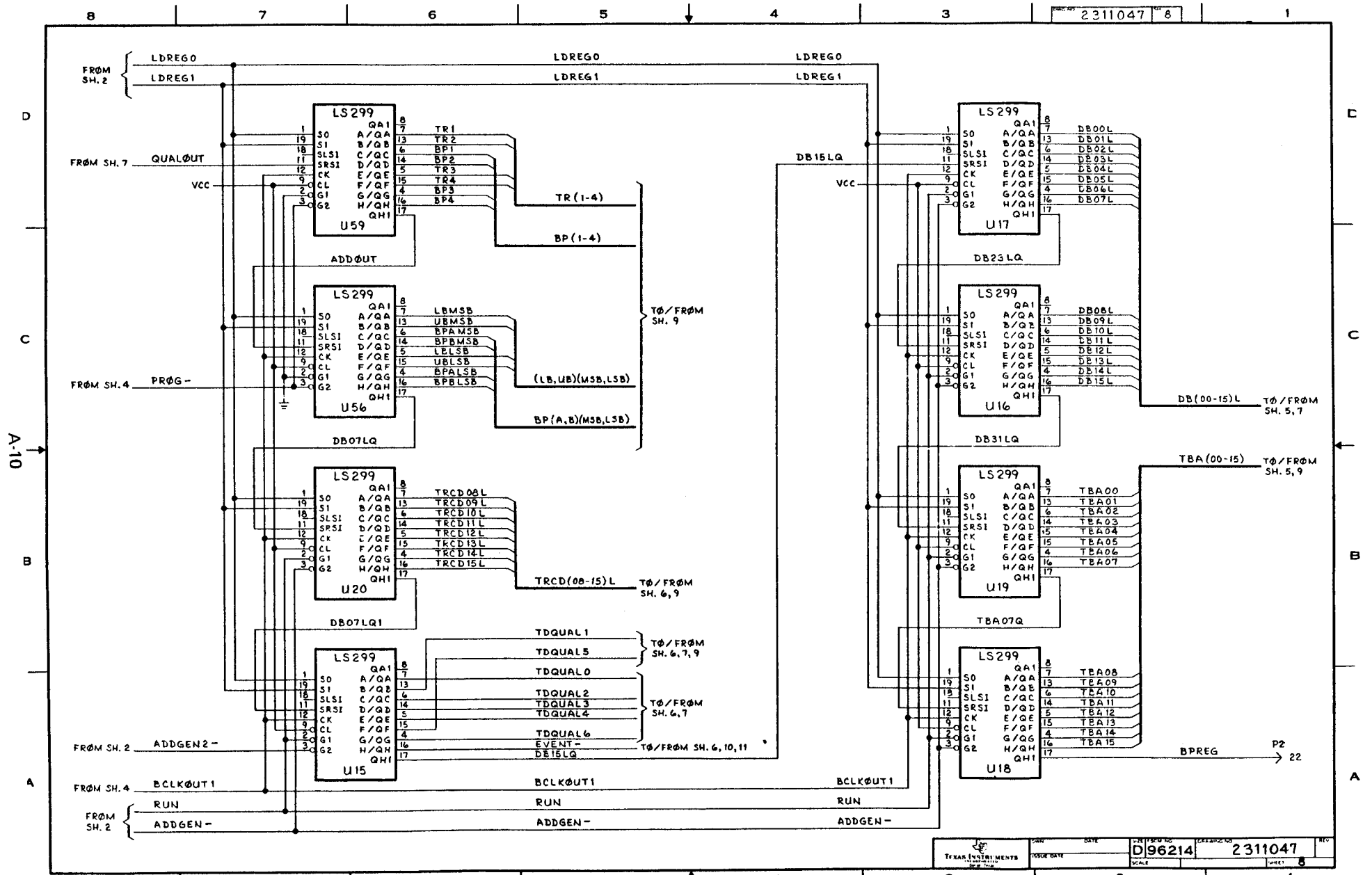
2311047 8
FROM SH. 2
LDREG0
LDREG1
LDREG0
LDREG1
LDREG0
LDREG1
FROM SH. 7
QUALØUT
VCC
DB15LQ
VCC
LS299
U59
TR1
TR2
BP1
BP2
TR3
TR4
BP3
BP4
TR(1-4)
BP(1-4)
ADDØUT
LS299
U17
DB00L
DB01L
DB02L
DB03L
DB04L
DB05L
DB06L
DB07L
DB23LQ
LS299
U56
LBMSB
UBMSB
BPAMSB
BPBMSB
LBLSB
UBLSB
BPALSB
BPBLSB
TØ/FRØM SH. 9
(LB,UB)(MSB,LSB)
BP(A,B)(MSB,LSB)
FROM SH. 4
PRØG-
DB07LQ
LS299
U16
DB08L
DB09L
DB10L
DB11L
DB12L
DB13L
DB14L
DB15L
DB(00-15)L
TØ/FRØM SH. 5,7
DB31LQ
LS299
U20
TRCD08L
TRCD09L
TRCD10L
TRCD11L
TRCD12L
TRCD13L
TRCD14L
TRCD15L
TRCD(08-15)L
TØ/FRØM SH. 6,9
DB07LQ1
LS299
U19
TBA00
TBA01
TBA02
TBA03
TBA04
TBA05
TBA06
TBA07
TBA(00-15)
TØ/FRØM SH. 5,9
TBA07Q
TDQUAL1
TDQUAL5
TØ/FRØM SH. 6,7,9
TDQUAL0
TDQUAL2
TDQUAL3
TDQUAL4
TØ/FRØM SH. 6,7
TDQUAL6
EVENT-
DB15LQ
TØ/FRØM SH. 6,10,11
LS299
U15
LS299
U18
TBA08
TBA09
TBA10
TBA11
TBA12
TBA13
TBA14
TBA15
BPREG
P2
22
FROM SH. 2
ADDGEN2-
FROM SH. 4
BCLKØUT1
BCLKØUT1
BCLKØUT1
FROM SH. 2
RUN
ADDGEN-
RUN
ADDGEN-
RUN
ADDGEN-
TEXAS INSTRUMENTS
D 96214
2311047
A-10

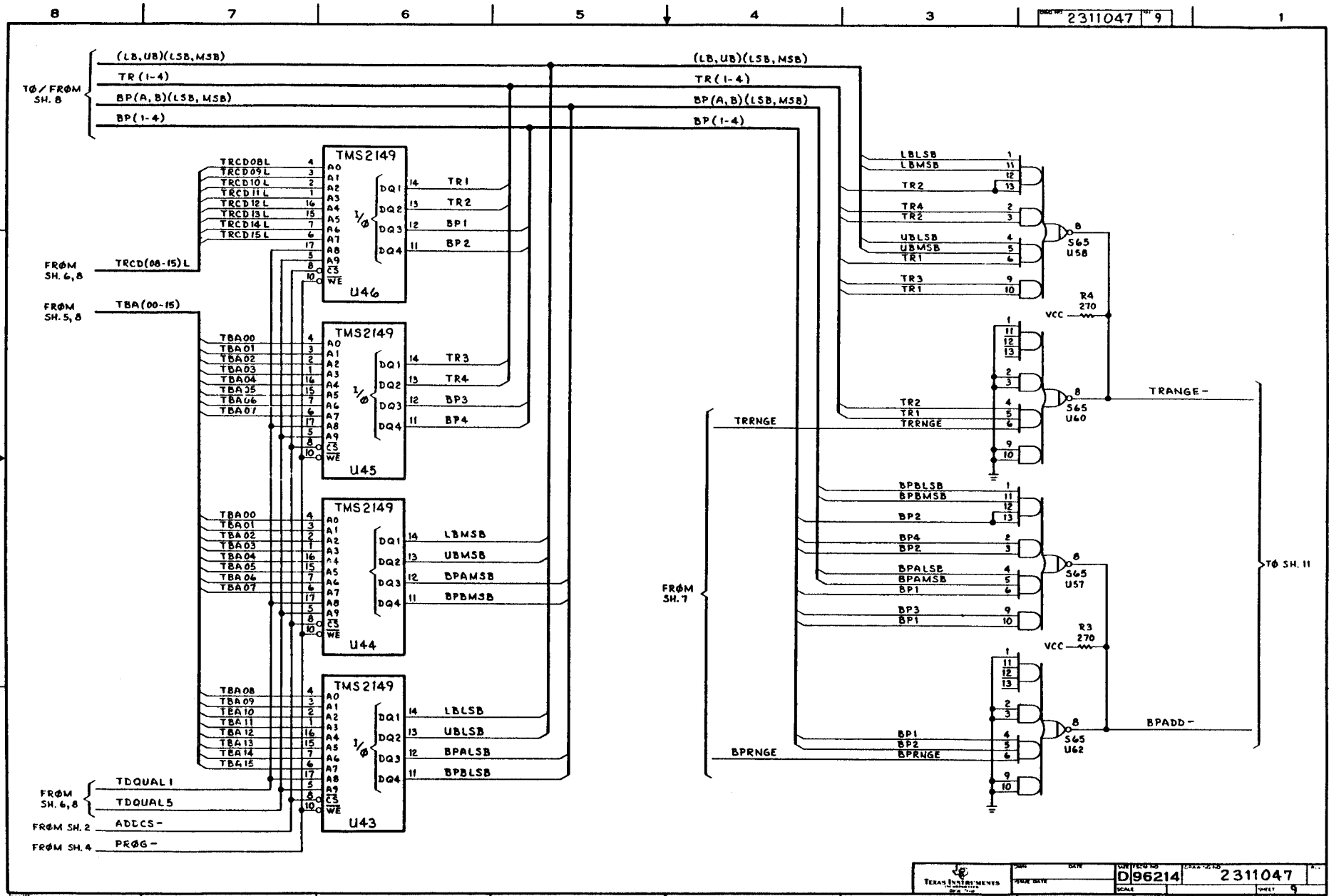
2311047 9
TØ / FRØM SH. 8
(LB,UB)(LSB,MSB)
TR(1-4)
BP(A,B)(LSB,MSB)
BP(1-4)
FRØM SH. 6,8
TRCD(08-15)L
TRCD08L
TRCD09L
TRCD10L
TRCD11L
TRCD12L
TRCD13L
TRCD14L
TRCD15L
FRØM SH. 5,8
TBA(00-15)
TBA00
TBA01
TBA02
TBA03
TBA04
TBA05
TBA06
TBA07
TBA08
TBA09
TBA10
TBA11
TBA12
TBA13
TBA14
TBA15
FRØM SH. 6,8
TDQUAL1
TDQUAL5
FROM SH. 2
ADDCS-
FROM SH. 4
PRØG-
TMS2149
U46
U45
U44
U43
TR1
TR2
BP1
BP2
TR3
TR4
BP3
BP4
LBMSB
UBMSB
BPAMSB
BPBMSB
LBLSB
UBLSB
BPALSB
BPBLSB
FRØM SH. 7
TRRNGE
BPRNGE
LBLSB
LBMSB
UBLSB
UBMSB
TR4
TR2
TR3
TR1
BPBLSB
BPBMSB
BP4
BP2
BPALSB
BPAMSB
BP3
BP1
S65
U58
U60
U57
U62
R4
R3
270
VCC
TRANGE-
BPADD-
TØ SH. 11
TEXAS INSTRUMENTS
D96214
2311047

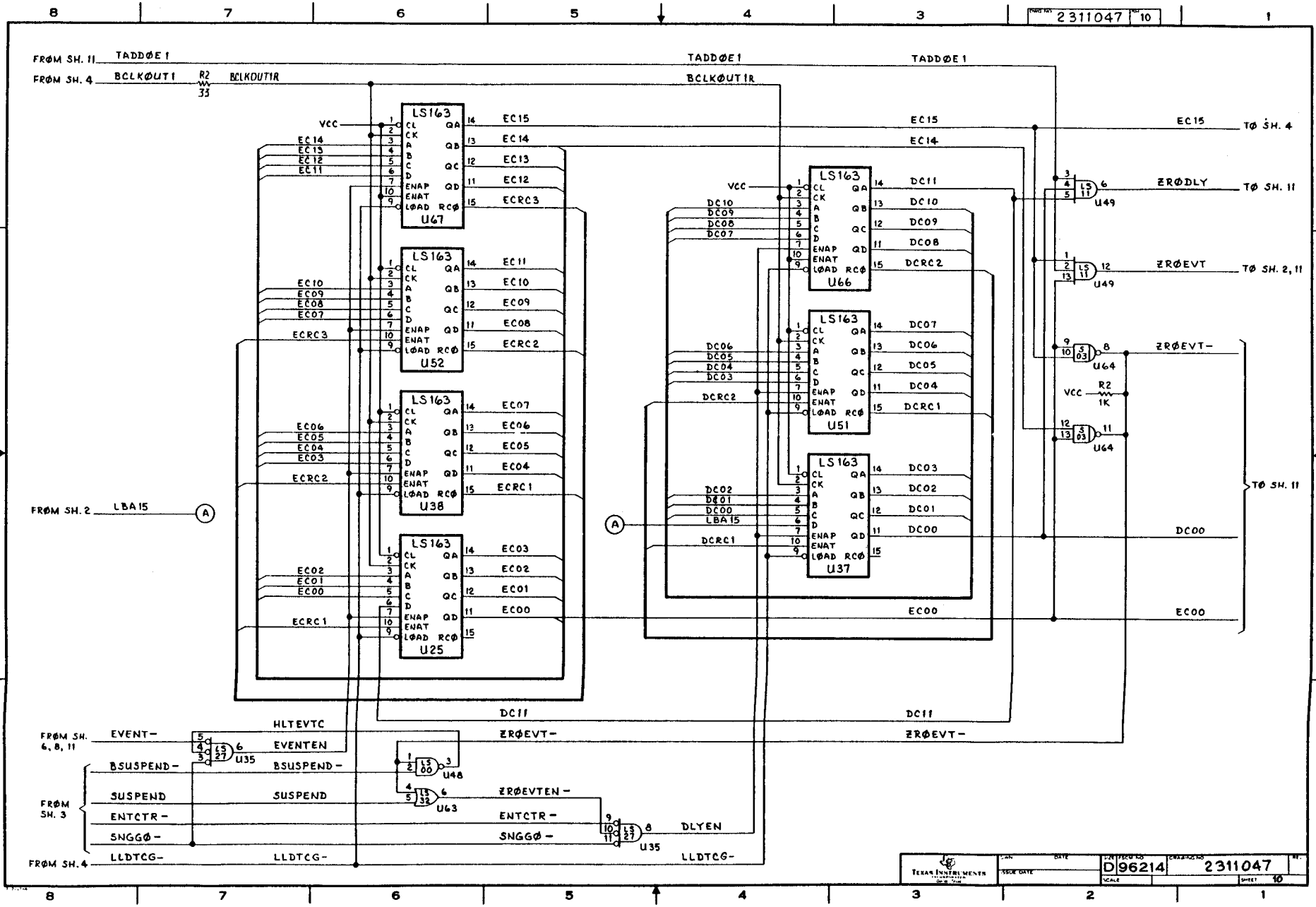

2311047
10
FRØM SH. 11
TADDØE1
FRØM SH. 4
BCLKØUT1
R2
33
BCLKOUT1R
LS163
U67
U52
U38
U25
U66
U51
U37
VCC
EC15
EC14
EC13
EC12
EC11
EC10
EC09
EC08
EC07
EC06
EC05
EC04
EC03
EC02
EC01
EC00
ECRC3
ECRC2
ECRC1
DC11
DC10
DC09
DC08
DC07
DC06
DC05
DC04
DC03
DC02
DC01
DC00
DCRC2
DCRC1
LBA15
TØ SH. 4
ZRØDLY
TØ SH. 11
ZRØEVT
TØ SH. 2, 11
ZRØEVT-
U49
U64
R2
1K
DC00
EC00
FRØM SH. 2
FRØM SH. 6, 8, 11
EVENT-
HLTEVTC
EVENTEN
BSUSPEND-
SUSPEND
ENTCTR-
SNGGØ-
LLDTCG-
FRØM SH. 3
FRØM SH. 4
U35
U48
U63
ZRØEVTEN-
DLYEN
TEXAS INSTRUMENTS
D 96214
2311047
SHEET 10

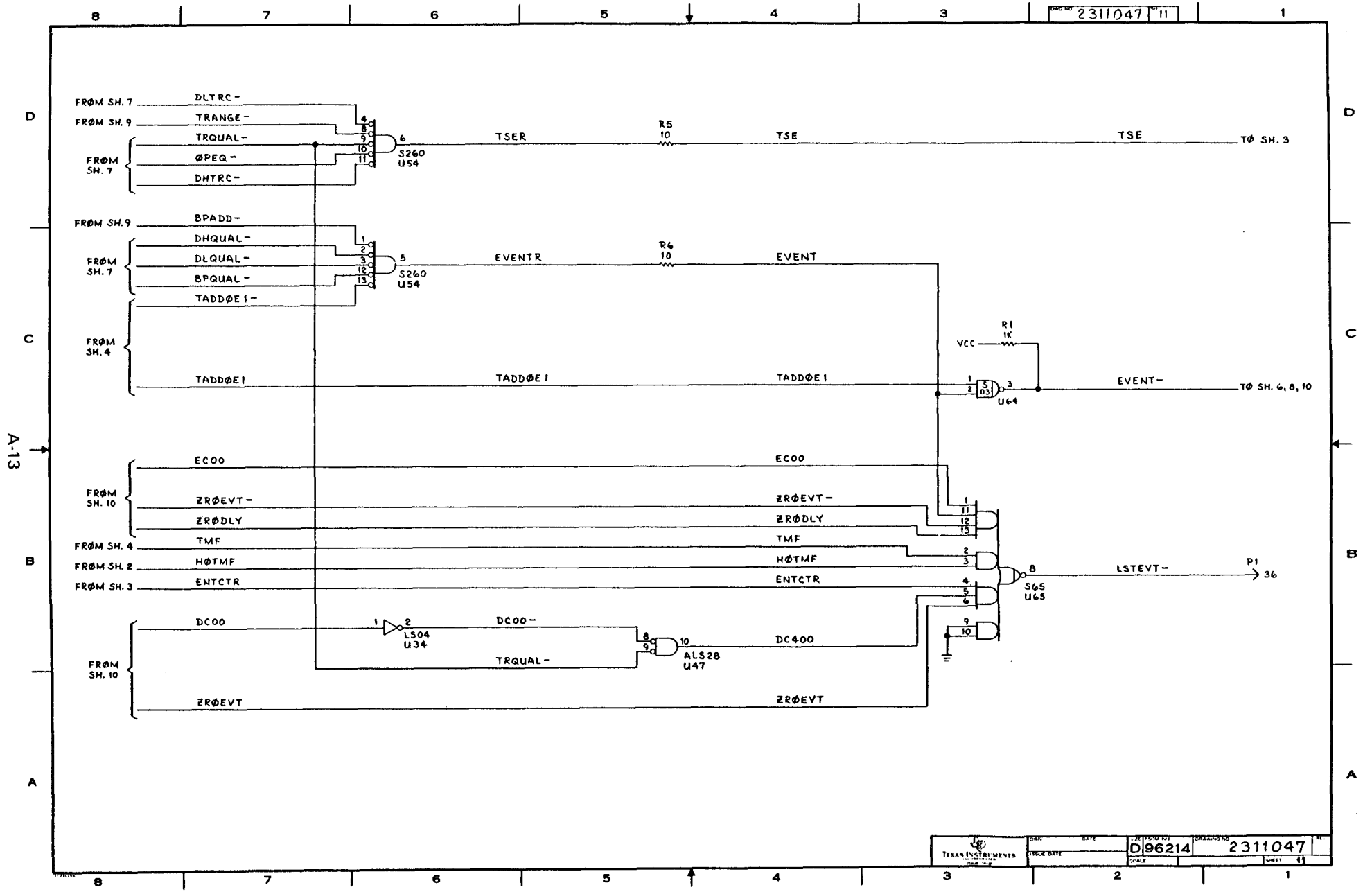
DWG NO 2311047 REV 11
FRØM SH. 7
DLTRC-
FRØM SH. 9
TRANGE-
FRØM SH. 7
TRQUAL-
ØPEQ-
DHTRC-
S260
U54
TSER
R5
10
TSE
TSE
TØ SH. 3
FRØM SH. 9
BPADD-
FRØM SH. 7
DHQUAL-
DLQUAL-
BPQUAL-
S260
U54
EVENTR
R6
10
EVENT
FRØM SH. 4
TADDØE1-
TADDØE1
TADDØE1
R1
1K
VCC
U64
EVENT-
TØ SH. 4, 8, 10
FRØM SH. 10
ECOO
ECOO
ZRØEVT-
ZRØDLY
ZRØEVT-
ZRØDLY
FRØM SH. 4
TMF
TMF
FRØM SH. 2
HØTMF
HØTMF
FRØM SH. 3
ENTCTR
ENTCTR
S65
U65
LSTEVT-
P1
36
FRØM SH. 10
DCOO
LS04
U34
DCOO-
ALS28
U47
DC400
TRQUAL-
ZRØEVT
ZRØEVT
TEXAS INSTRUMENTS
DWN
DATE
ISSUE DATE
SIZE
D
PROJ NO
96214
DRAWING NO
2311047
REV
SCALE
SHEET
A-13