As you are now the owner of this document which should have come to you for free, please consider making a donation of £1 or more for the upkeep of the (Radar) website which holds this document. I give my time for free, but it costs me around £300 a year to bring this document to you. You can donate here https://blunham.com/Radar, thank you.

Do not upload this copyright pdf document to any other website. Breaching copyright may result in a criminal conviction and large payment for Royalties.

This document was generated by me, Colin Hinson, from a document held at R.A.F. Henlow Signals Museum which is believed to be out of copyright or Crown Copyright. It is presented here (for free) under the Open Government Licence (O.G.L.) if under Crown Copyright and this version of the document is my copyright (along with the Crown Copyright) in much the same way as a photograph would be. It should be noted that most of the pages are identifiable as having been processed by me. If you believe the original document to be under copyright, please contact me.

The document should have been downloaded from my website https://blunham.com/Radar, or any mirror site named on that site. If you downloaded it from elsewhere, please let me know (particularly if you were charged for it). You can contact me via my Genuki email page: https://www.genuki.org.uk/big/eng/YKS/various?recipient=colin

You may not copy the file for onward transmission of the data nor attempt to make monetary gain by the use of these files. If you want someone else to have a copy of the file, point them at the website (https://blunham.com/Radar). **Please do not point them at the file itself as it may move or the site may be updated.**

I put a lot of time into producing these files which is why you are met with this page when you open the file.

In order to generate this file, I need to scan the pages, split the double pages and remove any edge marks such as punch holes, clean up the pages, set the relevant pages to be all the same size and alignment. I then run Omnipage (OCR) to generate the searchable text and then generate the pdf file.

Hopefully after all that, I end up with a presentable file. If you find missing pages, pages in the wrong order, anything else wrong with the file or simply want to make a comment, please drop me a line (see above).

If you find the file(s) of use to you, you might like to make a donation for the upkeep of the website – see https://blunham.com/Radar for a link to do so.

Colin Hinson

In the village of Blunham, Bedfordshire, UK.

V7.

SERVICES MANUAL

OF

PREFERRED VALVES

VOL. 1

ISSUED BY
THE INTER-SERVICE
TECHNICAL VALVE COMMITTEE

From :—
MINISTRY OF AVIATION,
T:L.5(b)/T.V.C. OFFICE,
CASTLEWOOD HOUSE,
NEW OXFORD STREET,
LONDON, W.C.I.

Tel :—MUSeum 3644, Ext. 689

Wt. 14290 D519 3M 6/62 B.G. Ltd. (2368) G798

ELECTRONIC VALVE SPECIFICATIONS

PREFERRED VALVES

Attention is drawn to Item 4(a) "Notice for Design and Production Authorities" for conditions under which other than Preferred Valves may be used for new equipment.

INDEX

DGLRD (ADMIN) INFORMATION SHEET NO. 1. - Oct. 1967
SECRD INFORMATION SHEET NO 2. - MARCH 68.
ELECTRONIC VALVE SPEC. MAY 68.

1 List of CV Test Specifications

2 Specification K.1001 No. 6 plus amendments 1-6.
This specification will be issued to holders of Preferred Manual (Vol. 1 and Vol. 1A) when available.

3 Specification K.1006 Issue No. 3 (Containing MIL-E-1D)

This specification will not be issued in view of its limited usage. Copies may be obtained however on request from Ministry of Technology, DGLRD/Dist. Room 104, Castlewood House, New Oxford Street, London, W.C.1, Telephone No. MUSeum 3644, Ext. 689.

4 (a) Notice for Design and Production Authorities Pages 1 and 2

(b) List of Pinned and Flying Lead Valves Equivalents

(c) (i) T.V.C. Information Sheet No. 5

(ii) T.V.C. Information Sheet No. 15

Note: T.V.C. Information Sheet No. 11 has been superseded by Appendix XX of K.1001.

(d) C.R.T. Screen Code

(e) Operating Conditions with Varying Anode Voltages

(f) Mounting positions for Preferred Valves

(g) Valve Base Pin Numbering

5 Functional Classification

6 Preferred CV specifications

DGLRD(Admin) Information Sheet No. 1

BRITISH STANDARD SPECIFICATIONS FOR ELECTRONIC PARTS OF ASSESSED QUALITY

1. The recommendations of the Second Report of the Committee on Common Standards for Electronic Parts (HMSO 1967), i.e. the Burghard Report were accepted by the Government, by Industry and by B.S.I. last year. All participants have since been working within B.S.I. and B.S.9000 "General Requirements for Electronic Parts of Assessed Quality" has now been published. Many of the subsidiary Generic Data and Detail specifications are well advanced and may be published before the end of the year.

2. New Electronic Parts required for use in Service equipment will normally be specified in this series of specifications instead of the RCSC DEF specifications and the TVC CV specifications.

3. Some of the existing DEF and CV specifications will be superseded by the BS Specifications. When this occurs you will be informed.

4. You should, however, keep yourself informed of the current situation in BSI. This may be most easily achieved by consulting BSI News e.g. the September issue contains:

page 5: A reminder about Sockets for electronic tubes and valves and plug-in devices, and fixed capacitors.

page 11: A statement about Rigid Wave-guide tubing.

page 32: The list of draft standards circulated for comment includes three detail specifications.

5. Those DEF and CV specifications which will not be superseded by BS specifications (or will not be superseded in the immediate future) will be the responsibility of branch TL5 of the Directorate of Electronics Research and Development (Telecommunications) DLRD(T) of the Ministry of Technology (Aviation Division). These specifications will continue to be distributed by DGLRD (Admin) as at present.

6. The Qualified Products List (RCG4) will also be maintained for DEF and CV Specification parts.

C. M. GOODCHILD
TL5

October 1967

01-636-3644 Extn. 689

Ministry of Technology
DGLRD DISTRIBUTION
Room 104,
Castlewood House,
77-91 New Oxford Street,
London, W.C.1.

May 1968

New issues of CV specifications are sent herewith for inclusion in the E.V.S. PREFERRED BOOKS held by you. The Specifications supersede previous issues which should be removed. Please amend the Numerical List accordingly.

HOLDERS OF PREFERRED

ELECTRONIC VALVE SPECIFICATION BOOKS

CV.6085 Issue No. 2

CV.6157 Issue No. 1

Information Sheet No. 2 DGLRD/ADMIN. (Please file after Information Sheet No. 1)

The last change sheet was dated March 1968.

DGLRD/DIST.

NM.49582(T)

DGLRD Information Sheet No. 2

NATO Stock Numbers - Item Identification Numbers

1. Passive Components (ex RCSC)

There is a long standing agreement that the digit "0" as the first digit of the item identification number (I.I.N) signifies an RCSC (now DLRD(T)) standard item. The specifications of these items are in the MOD DEF.5000 series as well as the RCS series.

Through a misunderstanding of this agreement MOD/DCA have allotted numbers with the digits 00 as the first two digits of the I.I.N. to non-standard items.

Consequently the agreement has been revised to "the digit 0 when it is not followed by a second 0 signifies a standard item".

This is an amendment to RCSC Information Sheet No. 8 para.3 and RCSC Circular No. 171.

2. Active Components

The same agreement applied in principle to the TVC CV items. However, it was not made effective by TVC and this 0 has no significance for active devices.

Note: TL5b will continue to allott NSN within the present allocations on behalf of DCA for the present. This is without any distinction on whether or not they are "standards."

The standard valves and semiconductors are those listed in the Services Lists of Preferred Valves and of Semiconductors. It is expected that these will shortly be converted to Defence Standards.

3. Summary

The allocations of I.I.N. with 0 as the first digit are:

From	To	User
000-0001	000-9999	Reserved for TL5 (ex T.V.C items
001-0000	009-9999	DCA Non Standards
010-0000	037-1999	Reserved for TL5 (ex RCSC) for Standards
037-2000	037-6999	Reserved for TL5 (ex T.V.C items
037-7000	099-9999	Reserved for TL5(ex RCSC) for Standards

Ministry of Technology
TL5
Castlewood House
77-91 New Oxford Street, London W.C.1

March, 1968

C.M. Goodchild
TL5

Electronic CV Valves

Numerical List of Preferred Types

1. Hitherto CV valve types have been divided into four separate availability classes:-

Preferred - unrestricted use in new equipments, (Valve specification exists, Qualification Approval has been granted etc.).

Guidance - destined to become preferred when all the criteria for preferred have been met.

Current - approval for their use in new equipments to be obtained as there may be difficulties in production or similar types may be preferred etc.

Maintenance - Not for use in new equipments

2. Henceforth CV Valve Types will be divided into two classes only:-

Preferred - Recommended for use in equipments.

Maintenance - All types not listed as preferred.

3. Numerical List of Preferred Types.

CV No.	Issue No.	Amdts.	Description of Tube	Note	Page in Functional Classification - To follow
477	2		Pentode		3
490	2	1	Rectifier		2
1835	1		Rectifier		2
1881	4		Noise Tube		7
1916	1		Magnetron		9
2130	6		Tetrode		4
2131	6		Tetrode		4
2160	4	1.2.3	Rectifier		2
2171	2	1	Noise Diode		7
2274	2		T.B. Cell		11

CV No.	Issue No.	Amdts.	Description of Tube	Note	Page in Functional Classification To follow
2309	2		T.B. Cell		11
2311	4	1.2.3,4A	T.R. Cell		11
2312	4	1.2.3.4A	T.R. Cell		11
2325	1		Selector Tube		12
2341	1	1.2.3	Noise Diode		7
2352	3	1	C.R.T.		1
2388	1	1	C.R.T.		1
2397	2A		U.H.F. Triode		4
2431	1	1	C.R.T.		1
2456	1	1	Corona Stabiliser		6
2457	1	1	Corona Stabiliser		6
2458	1	1	Corona Stabiliser		6
2459	1	1	Corona Stabiliser		6
2460	1	1	Corona Stabiliser		6
2461	1	1	Corona Stabiliser		6
2462	1	1	Corona Stabiliser		6
2466	1	1	Double Tetrode		5
2473	1A		Magnetron		9
2483	1	1.2.3	Pulsed Attenuator		10
2494	~~1A~~	1.2.3	V.M. Tube		9
2498	1		C.R.T.		1
2721	3	1	Pentode		3
2797	3	1,2	Double Tetrode		5
2798	1	1	Double Tetrode		5
2799	4	1	Double Tetrode		5
2975	1		Pentode		3
3523	2	1	Pentode		4
3629	2		Hy. Thyraton	(2)	8
3928	1		Pentode		3
3929	1	1	Pentode		3
3930	1		Triode		3
3946	1	1	C.R.T.		1
3986	1		Double Triode		5
3998	1	1.2	Pentode		3
4003	4A		Double Triode		5
4004	3	1.2.3	Double Triode		5
4007	3	1	Double Triode		2
4009	2	1.2	Pentode		3
4010	5		Pentode		3
4014	4	1.2.3.4	Pentode		3

/4018

CV No.	Issue No.	Amdts.	Description of Tube	Note	Page in Functional Classification - To follow
4018	2		Gas Tetrode		11
4024	3	1.2.3.4	Double Triode		5
4029	1		Pentode		3
4040	2	1	Voltage Stabiliser		6
4043	2	1	Tetrode		3
4055	2	1.2	Pentode		3
4058	~~1~~ A	1.2	Triode		3
4060	2	1	Tetrode		4
4062	2		Pentode		3
4079	1		Triode		4
4080	1	1	Voltage Stabiliser		6
4082	1B	1	Tetrode		4
4085	1A		Pentode		3
4100	1		Voltage Stabiliser		6
4101	1	~~1.2.3~~	Voltage Stabiliser		6
4105	1A	1	Triode	(2)	3
4108	1	1.2.3	Double Triode		5
5008	3	1	Double Triode		5
5018	2		Magnetron		9
5035	1	1	C.R.T.		1
5125	1	1	C.R.T.		1
5135	2		Magnetron	(2)	9
5143	1		Decade Tube		12
5242	1	1	Triode		3
6005	1		Monitor Diode		12
6007	1	1	Hy Thyraton		8
6015	1A		Hy Thyraton		8
6023	5	1	V.T. Osc.		8
6024	4	1	V.T. Osc.		8
6026	1C		Hy Thyraton		8
6028	1	1.2.3	Pre T.R. Cell		11
6034	1		Magnetron	(2)	9
6035	1		Magnetron		9
6036	1		Magnetron	(2)	9
6044	1	1	Decade Tube		12
6045	1A		Tetrode		4
6051	1	1.2.3	Hy Thyraton		8
6065	1	1	Corona Stabiliser		6
6066	1	1	Corona Stabiliser		6
6067	1	1	Corona Stabiliser		6

/6070

CV No.	Issue No.	Amdts.	Description of Tube	Note	Page in Functional Classification - To follow
6070	1		T.C. Cell		11
6071	1		V.M. Tube		9
6072	2		Magnetron		9
6073	1	1	Limiting Cell		11
6076	1		V.T. Osc.		8
6085	2.		T.W.T.		10
6086	1	1.2	Pre T.R. Cell		11
6089	1B	1.2	Pulsed Attenuator	(2)	10
6090	1		T.W.T.		10
6094	1		Voltage Indicator	(3)	12
6096	1A		T.W.T.		10
6097	1	1.2 3.4	Shunt Stabiliser		12
6098	1		T.W.T.	(2)	10
6099	2A	1,2.	I.R. Converter		12
6100	1		Decade Tube		12
6103	1		Selector Tube		12
6106	1	1	T.W.T.		10
6107	2A	1.	Monitor Diode		12
6109	1		C.R.T.		1
6110	1	1.2.3	Pre T.R. Cell	(2)	11
6112	1	1	V.T. Osc.	(2)	8
6113	1,2.	1	C.R.T.		1
6117	1A	1.2	T.W.T.		10
6127	1A		T.W.T.		10
6129	1A	1.2	T.R. Cell		11
6132	1A	1	T.R. Cell		11
6142	1		V.M. Tube		9
6157			T.W.T.	(1)	10
6164	1		C.R.T.	(2)	1
6167	1	1	C.R.T.		1
6168	1		T.R. Cell		11
6169	1	1	T.R. Cell		11
{6178, 6192} {6206.}	1A	1 2.	T.R. Limiter	(2)	11
~~6179~~			T.W.T.	(1)	10
6180			T.W.T.	(1)	10
6181			T.W.T.	(1)	10
~~6182~~			T.W.T.	(1)	10
6184	1	1	Tetrode		4
~~6192~~	~~1A~~	~~1~~	T.R. Limiter		11

6209-10.}
6211-12} 1

6234 1

4. The following types will be added when CV specifications are available.

VX 9252	Noise Tube	Page 7
VX 9247	Noise Tube (Reference)	Page 7
VX 9248	Noise Tube (Reference)	Page 7
VX 9249	Noise Tube (Reference)	Page 7
VX 7166	U.H.F. Triode	Page 4

Cathode Ray Tube to supersede CV 9311

NOTES

1. Specification not yet printed.

2. No Qualification Approval yet granted. Apply to the Establishment quoted on the Specification for information re maker.

3. Foreign-made

August 1967

MINISTRY OF SUPPLY, D.I.R.D./R.A.E.

VALVE ELECTRONIC **CV477**

SPECIFICATION M.O.S./CV.477 incorporating MIL-E-1/97D	SECURITY	
	SPECIFICATION	VALVE
ISSUE 2 DATED 4.12.58	Unclassified	Unclassified
To be read in conjunction with K.1006 and BS.448		

← Indicates a change

TYPE OF VALVE: Subminiature Pentode, Semi-remote cut-off with flying leads.

CATHODE: Indirectly heated.

ENVELOPE: Glass.

PROTOTYPE: 5899.

MARKING

See K.1001/4
Additional marking: 5899

BASE

B8D/F.
(Subminiature 8 pin with long leads.)

RATING

			NOTES
Heater Voltage	(V)	6.3	
Heater Current	(mA)	150	
Max. Operating Anode Voltage	(V)	165	A
Max. Operating Screen Voltage	(V)	155	A
Max. Anode Dissipation	(W)	0.75	A
Max. Screen Dissipation	(W)	0.35	A
Max. Cathode Current	(mA)	16.5	A
Max. Heater Cathode Current	(V)	200	A
Mutual Conductance	(mA/V)	4.5	C
Anode Impedance	(kΩ)	175	C

CAPACITANCES (pF)

C in (nom.)		4.3	B
C out (nom.)		3.4	B
Ca,g1 (max.)		0.015	B

CONNECTIONS

Lead	Electrode
1	g1
2	k + g3
3	h
4	k + g3
5	a
6	h
7	g2
8	k + g3

DIMENSIONS

See BS.448/B8D/F/2.1 ←
Size Ref. No.1

DIMENSIONS (mm)	MIN.	MAX.
A	25.8	28.8
B	-	34.9
C (dia.)	9.3	10.16

MOUNTING POSITION

Any.

NOTES

A. Absolute value.

B. Measured with close fitting metal screen.

C. At Va = Vg2 = 100V, Vg1 = -10V (Ia = 7.2 mA approx. Ig2 = 2.0 mA approx.)

NOTES

The data and tests for Valve Type JAN-5899 shall apply.

CV477

MIL-E-1/97D
22 October 1957
SUPERSEDING
MIL-E-1/97C
23 June 1955

INDIVIDUAL MILITARY SPECIFICATION SHEET

ELECTRON TUBE, RECEIVING PENTODE, SUBMINIATURE

JAN-5899, 6206

This specification sheet forms a part of the latest issue of Military Specification MIL-E-1.

Description: Pentode, Semi-remote Cutoff, Reliable

Ratings:	Ef V	Eb Vdc	Ec1 Vdc	Ec2 Vdc	Ec3 Vdc	Ehk v	Rk ohms	Rg1 Meg	Ik mAdc	Pp W	Pg2 W	T Envelope °C	Alt ft
Absolute Maximum:	6.6	165	0	155	22	200	---	1.1	16.5	---	---	220	60,000
*Design Maximum:	---	---	---	---	---	---	---	---	---	0.85	0.25	---	---
Minimum:	6.0	---	-55	---	---	---	---	---	---	---	---	---	---
Test Cond.:	6.3	100	0	100	0 Note 1	0	120	---	---	---	---	---	---

Cathode: Coated Unipotential
Base: Subminiature - 8 Pin with long leads

Diameter: 0.400 in. max.
Height: 1.375 in. max.

Pin No.:	1	2	3	4	5	6	7	8	
Element:	g1	k g3	h	k g3	p	h	g2	k g3	Type 5899
Element:	g1	k sd	h	g3	p	h	g2	k sd	Type 6206

Envelope: T-3

The following tests shall be performed:

For the purposes of inspection, use applicable reliable paragraphs of MIL-E-1 and Inspection Instructions for Electron Tubes.
For miscellaneous requirements, see Paragraph 3.3, Inspection Instructions for Electron Tubes.

Ref.	Test	Conditions	AQL(%)	Insp. Level or Code	Sym.	LIMITS, NOTE 4 Min.	LAL	Bogie	UAL	Max.	ALD	Units
	Qualification Approval Tests											
3.1	Qualification Approval:	Required for JAN Marking	---	---								
---	Cathode:	Coated Unipotential	---	---								
3.4.3	Base Connections:	E8-10	---	---								
	Measurements Acceptance Tests, Part 1, Note 3											
4.10.8	Heater Current:		---	---	If:	---	144	150	156	---	12	mA
4.10.8	Heater Current:		0.65	II	If:	140	---	---	---	160	---	mA
4.10.15	Heater-Cathode Leakage:	Ehk=+100Vdc	0.65	II	Ihk:	---	---	---	---	5.0	---	uAdc
		Ehk=-100Vdc			Ihk:	---	---	---	---	5.0	---	uAdc
4.10.6.1	Grid Current:	Rg1=1.0Meg	0.65	II	Ic1:	0	---	---	---	-0.3	---	uAdc
4.10.4.1	Plate Current(1):		---	---	Ib:	---	6.4	7.2	8.0	---	2.3	mAdc
4.10.4.1	Plate Current(1):		0.65	II	Ib:	5.2	---	---	---	9.2	---	mAdc
4.10.4.3	Screen Grid Current:		0.65	II	Ic2:	1.0	---	---	---	3.0	---	mAdc
4.10.9	Transconductance(1):		---	---	Sm:	---	4200	4500	4800	---	800	umhos
4.10.9	Transconductance(1):		0.65	II	Sm:	3800	---	---	---	5200	---	umhos
4.7.5	Continuity and Shorts	(Inoperatives):	0.4	II	---	---	---	---	---	---	---	
---	Suppressor:	Note 22	0.4	II	---	---	---	---	---	---	---	
4.9.1	Mechanical:	Envelope (8-1)										
	Measurements Acceptance Tests Part 2											
4.8.2	Insulation of Electrodes:	g1-all	2.5	I	IR:	100	---	---	---	---	---	Meg
		p-all			IR:	100	---	---	---	---	---	Meg
4.10.9	Transconductance(2):	Ef=5.7V; Note 2	2.5	I	$\Delta\frac{Sm}{Ef}$:	---	---	---	---	10	---	%
4.10.9	Transconductance(3):	Ec1=-14Vdc; Rk=0	2.5	I	Sm:	1.0	---	25	---	75	---	umhos

CV477

Ref.	Test	Conditions	AQL(%)	Insp. Level or Code	Sym.	LIMITS Min.	LAL	Bogie	UAL	Max.	ALD	Units
	Measurements Acceptance Tests Part 2(Contd)											
.10.6.2	Grid Emission:	Ef=7.5V;Ecl=-14Vdc; Rgl=1.0Meg;Rk=0; Note 21	2.5	I	Icl:	0	—	—	—	-0.5	—	uAdc
.10.3.2	AF Noise:	Esig=70mVac;Ec2=19Vdc; Rgl=0.1Meg;Rg2=1000: Rp=0.2Meg;Ck=1000uf	2.5	I	EB:	—	—	—	—	17	—	VU
.10.10	Plate Resistance:		6.5	L6	rp:	0.175	—	—	—	—	—	Meg
.10.14	Capacitance:	0.405 in. dia. Shield			Cglp:	—	—	—	—	0.015	—	uuf
		0.405 in. dia. Shield	6.5	Code F	Cin:	3.5	—	—	—	4.5	—	uuf
		0.405 in. dia. Shield			Cout:	2.9	—	—	—	3.9	—	uuf
.9.12.1	Low Pressure Voltage Breakdown:	Pressure=55+5mm Hg.: Voltage=300Vac	6.5	Note 5	—	—	—	—	—	—	—	
.9.20.3	Vibration(1):	No Voltages;Post Shock and Fatigue Test End Points apply	10.0	Note 5		—	—	—	—	—		
.9.19.1	Vibration(2):	F=40cps;G=15;Rp=10,000; Ck=1000uf	2.5	I	Ep:	—	—	—	—	60	—	mVac
	Degradation Rate Acceptance Tests Note 6											
.9.5.3	Subminiature Lead Fatigue:	Note 7	2.5	Code F		4	—	—	—	—	—	arcs
.9.20.5	Shock:	Hammer angle=30°; Ehk=+100Vdc;Notes 8,9	—	—		—	—	—	—	—	—	
.9.20.6	Fatigue:	G=2.5;Fixed Frequency; F=25 min., 60 max.	6.5	Note 5		—	—	—	—	—	—	
—	Post Shock and Fatigue Test End Points:	Vibration(2)	—	—	Ep:	—	—	—	—	200	—	mVac
		Heater-Cathode Leakage Ehk=+100Vdc	—	—	Ihk:	—	—	—	—	20	—	uAdc
		Ehk=-100Vdc	—	—	Ihk:	—	—	—	—	20	—	uAdc
		Change in Transconductance(1) of individual tubes	—	—	Δ_t^{Sm}:	—	—	—	—	20	—	%
—	Glass Strain:	Note 10	6.5	I		—	—	—	—	—	—	

Ref.	Test	Conditions	AQL(%)	Insp. Level or Code	Allowable Defectives per Characteristic 1st Sample	Combined Samples	Sym.	LIMITS Min.	Max.	Units
	Acceptance Life Tests Note 6									
.11.7	Heater Cycling Life Test:	Ef=7.0V; 1 min. on, 4 min. off;Ehk=140Vac;Ecl=Ec2=Eb =Ec3=0;Note 11	2.5	Code H	—	—		—	—	
—	Stability Life Test: (1 Hour)	Ehk=200Vdc;Rgl=1.0Meg; TA=Room;Note 12	1.0	Code I	—	—		—	—	
.11.4	Stability Life Test End Points:	Change in Transconductance(1) of individual tubes	—	—	—	—	Δ_t^{Sm}:	—	10	%
—	Survival Rate Life Test:	Stability Life Test Conditions or equivalent; TA=Room;Notes 13,14	—	II	—	—		—	—	
.11.4	Survival Rate Life Test End Points:	Continuity and Shorts (Inoperatives)	0.65	—	—	—	—	—	—	—
		Transconductance(1)	1.0	—	—	—	Sm:	3350	—	umhos

Ref.	Test	Conditions	AQL(%)	Insp. Level or Code	Allowable Defectives per Characteristic		Sym.	LIMITS		Units
					1st Sample	Combined Samples		Min.	Max.	
	Acceptance Life Tests(continued)									
4.11.4	Intermittent Life Test:	Stability Life Test Conditions;T Envelope= +220°C min;Notes 15,16; 1000 Hour Requirements do not apply	—	—	—	—		—	—	
4.11.4	Intermittent Life Test End Points: (500 Hours) Note 16	Note 17								
		Inoperatives;Note 18	—	—	1	3		—	—	
		Grid Current	—	—	1	3	Icl:	0	-0.8	uAdc
		Heater Current	—	—	2	5	If:	138	164	mA
		Change in Transconductance(1) of individual tubes	—	—	1	3	Δ Sm_t:	—	20	%
		Transconductance(2)	—	—	2	5	Δ Sm_{Ef}:	—	15	%
		Heater-Cathode Leakage								
		Ehk=+100Vdc	—	—	2	5	Ihk:	—	10	uAdc
		Ehk=-100Vdc					Ihk:	—	10	uAdc
		Insulation of Electrodes								
		gl-all	—	—	2	5	R:	50	—	Meg
		p-all	—	—			R:	50	—	Meg
		Transconductance(1) average change	—	—	—	—	AvgΔ Sm_t:	—	15	%
		Total Defectives	—	—	4	8		—	—	
4.11.5	Information Life Test: (1000 Hours)	Intermittent Life Test Conditions;Notes 16,19, 20								
	Packaging Requirements									
4.9.18.1.1	[1] Container Drop:	(d) Package Group 1; Container Size C								

Note 1: Types 5899 and 6206 are the same except for suppressor grid and cathode connections. The Ec3 column in the heading applies only to type 6206. Type 6206 has not been designed for control or gating purposes using the number 3 grid.

Note 2: Transconductance (2) is the percent change in Transconductance (1) of an individual tube resulting from the change in Ef.

Note 3: The AQL for the combined defectives for attributes in Measurements Acceptance Tests, Part 1, excluding inoperatives and mechanical shall be one (1) percent. A tube having one (1) or more defects shall be counted as one (1) defective. MIL-STD-105, Inspection Level II shall apply.

Note 4: Variables Sampling Procedure:

See paragraphs 5.3.3 to 5.3.3.4, inclusive, of the Inspection Instructions for Electron Tubes.

Note 5: This test shall be conducted on the initial lot and thereafter on a lot approximately every 30 days. When one lot has passed, the 30-day rule shall apply. In the event of lot failure, the lot shall be rejected and the succeeding lots shall be subjected to this test until a lot passes. MIL-STD-105, sample size code letter F shall apply.

Note 6: Destructive tests:

Tubes subjected to the following destructive tests are not to be accepted under this specification.

4.9.5.3	Subminiature Lead Fatigue
4.9.20.5	Shock
4.9.20.6	Fatigue
4.11.7	Heater-Cycling Life Test
4.11.5	Intermittent Life Test

Note 7: When a manufacturer submits tubes for qualification approval, five extra tubes shall be submitted for lead fatigue testing. These may be electrical rejects.

Note 8: A grid resistor of 0.1 megohm shall be added; however, this resistor will not be used when a thyratron-type short indicator is employed.

Note 9: Leads may be clipped for application of voltages during impact.

Note 10: Glass strain procedures - All tubes subjected to this test shall have been sealed a minimum of 48 hours prior to conducting this test. All tubes shall be at room temperature. The entire tube shall be immersed in water at not less than 85°C for 15 seconds and immediately thereafter immersed in water at not more than 5°C for 5 seconds. The volume of water shall be large enough that the water temperature will not be appreciably affected by the test. The holder shall be in accordance with Drawing #245-JAN, and the tubes shall be immersed quickly. The tubes shall be so placed in the water that no contact is made with the containing vessel, nor shall the tubes contact each other. After the 5-second submersion period, the tubes shall be removed and allowed to return to room temperature on a wooden surface. After drying at room temperature for a period of 48 hours, the tubes shall be inspected and rejected for evidence of air leaks (Ref. MIL-E-1, par. 3.2.4.3). Electrical rejects, other than inoperatives, may be used in the performance of this test.

Note 11: The no-load to steady state full load regulation of the heater voltage supply shall be not more than 3.0 percent. This test shall be made on a lot by lot basis. A failure or defect shall consist of an open heater, open cathode circuit, heater-cathode short, or heater-cathode leakage in excess of the specified Heater-Cycling Life Test End Point limit.

Note 12: Stability Life Test: The sampling and testing procedure for this test shall be in accordance with paragraphs 5.3.4.1(a) to 5.3.4.1(g), inclusive, of the Inspection Instructions for Electron Tubes.

Note 13: SURVIVAL RATE LIFE TEST: The sampling and testing procedure for this test shall be as defined in paragraphs 5.3.4.2 to 5.3.4.2.4, inclusive, of the Inspection Instructions for Electron Tubes.

Note 14: For Survival Rate Life test, the equivalent Stability Life Test conditions shall be as defined in paragraph 5.3.4.2.5 of the Inspection Instructions for Electron Tubes.

Note 15: Intermittent Life Tests: Sampling and acceptance procedures for these tests shall be as defined in paragraphs 5.3.4.3(a) to 5.3.4.3(i), inclusive, of the Inspection Instructions for Electron Tubes.

Note 16: Envelope Temperature is defined as the highest temperature indicated when using a thermocouple of #40 BS or smaller diameter elements welded to a ring of 0.025 inch diameter phosphor bronze in contact with the envelope. Envelope Temperature requirement will be satisfied if tube, having bogie Ib (±5%) under normal test conditions, is determined to operate at minimum specified temperature at any position in the life test rack.

Note 17: Order for Evaluation of Life Test Defects: See Paragraph 5.3.4.4 of the Inspection Instructions for Electron Tubes.

Note 18: An inoperative as referenced in Life Test is defined as a tube having one (1) or more of the following defects: discontinuity (Ref. MIL-E-1, par. 4.7.1), shorts (Ref. MIL-E-1, par. 4.7.2), air leaks (Ref. MIL-E-1, par. 3.2.4.3).

Note 19: On Information Life Tests, read same characteristics as Intermittent Life Test. Limits do not apply. Six (6) copies of these data shall be forwarded to the Armed Services Electron Tube Committee for review.

Note 20: This life test shall be conducted on a minimum of one sample of ten tubes each month of production. This sample shall be selected as the first ten serially marked, noninoperative tubes from a completed Intermittent Life Test sample. This life test shall be classified as a destructive test. Read at 1000 hours.

Note 21: Prior to this test tubes shall be preheated 5 minutes at conditions indicated below. Test within three (3) seconds after preheating. Three-minute test is not permitted. Grid Emission shall be the last test performed on the sample selected for the Grid Emission test.

Ef	Ec1	Ec2	Ec3	Eb	Rk	Rg1
V	Vdc	Vdc	Vdc	Vdc	ohms	Meg
7.5	0	100	0	100	120	1.0

Note 22: Reject for open suppressor if plate current does not decrease by a minimum of 10% when Ec3 is changed from 0 to -100Vdc. This test is applicable only to tube type 6206.

Note 23: Referenced specification shall be of the issue in effect on the date of invitation for bid.

* Design maximum ratings, in general, are limiting values, based on bogie tubes, at which satisfactory tube life can be expected under the types of service for which the tube is rated. The design maximum rating for plate dissipation is defined as 120 percent of the product of the plate voltage applied during Intermittent Life test and the plate current of an average (bogie) tube during the life test, expressed in watts.

CV490

VALVE ELECTRONIC

ADMIRALTY SIGNAL & RADAR ESTABLISHMENT

Specification AD/CV490/Issue 2. Dated : 12.12.50. To be read in conjunction with K1001.	**SECURITY** Specification: Unclassified Valve: Unclassified

TYPE OF VALVE:- High Vacuum Rectifier, Damping Diode.

CATHODE:- ~~Indirectly~~ OR INDIRECTLY Heated, Oxide Coated.

ENVELOPE:- Hard Glass.

PROTOTYPE:- VX6021.

MARKING

See K1001/4.

BASE

Edison-type Screw Lamp Cap E.40/45 (Goliath)

See ~~K1001 A14/D15.1~~ K1001/A 1V/D15

RATING

			Note
Heater Voltage	(V)	4.0	A,B
Heater Current	(A)	4.0	
Max. Anode Dissipation	(W)	32	B,C
Max. Peak Inverse Voltage			
Under short pulse conditions	(kV)	27	D
Under faulty conditions	(kV)	35	E
Under rectifier conditions (no load)	(kV)	20	
Max. Peak Anode Current			
Under short pulse conditions	(A)	10	D
Under rectifier conditions	(A)	1.0	F
Max. RMS Anode Current	(mA)	350	
Internal Resistance	(ohms)	105	G

CONNECTIONS

Base thread : H) See
" button : H) Note A.
T.C. : A

TOP CAP

See K1001/AI/D5.

Dimension	Min.	Max.
A (mm)	9.27	9.78
B (mm)	11.43	16.51

AK1

DIMENSIONS

See K1001/AI/D1.

Dimension	Min.	Max.
A (mm)	-	240
B (mm)	-	58

PACKAGING

See K1005.

NOTES

A. ~~As the cathode is connected to the centre of the filament~~ the HT return should preferably go to the centre tap of the heater transformer. If this cannot be done, the ratings for peak and mean anode current should be reduced.

B. The anode voltage must not be applied for 30 seconds after switching on the heater.

C. This may be increased to 38 W provided the Peak Inverse Voltage does not exceed 75% of the rated value.

D. These ratings are for pulses of the order of 2 μs or less.

E. Under short pulse conditions, provided fault does not persist for more than 50 milliseconds.

F. If necessary a resistance of up to 1600 ohms must be added to the anode circuit to limit the peak switching surge to 6 A.

G. At Ia = 8 A.

TESTS

To be performed in addition to those applicable in K1001.

	Test Conditions		Test	Limits		No. Tested	Note
	Vh (V)	Va (V)		Min.	Max.		
a	4.0	-	Ih		4.4	100%	
b	4.0	200 Applied through a resistance of 264 ohms	Ia Vacuum Test (mA)	320	450	100%	1
c	(i) 4.0	800 1 micro-second pulses at a prf not greater than 550 c/s	(i) Internal resistance at full cathode heating to be called R_1 (ohms)	85	132	100%	
	(ii) 3.6		(ii) Internal resistance at reduced cathode heating (ohms)		R_1 + 25 or 142 which ever is the smaller	100%	
d	4.0	Valve to be run for 15 minutes in a Voltage Doubler circuit at Va = 7.75 kV RMS (50 c/s sine wave), Load = 130,000 ohms, Condenser = 1 µF/Valve, Limiting resistance = 1,600 ohms.		Reject valve which shows appreciable sparking or abnormal heating of cathode or heaters.		100%	
e	4.0	35,000 pulsed P.I.V.	Pulse test : Duration 1 minute. Not rejected valves, which show tendency to spark (more than 5 times per minute) to be submitted to test 'f'.	Reject valves which spark more than 20 times per minute.		100%	2
f	4.0	27,000 pulsed P.I.V.	Pulse Test Duration 2 minutes.	No sparking permitted.		Selected in test 'e'.	2

NOTES

1. No portion of the anode may show hot spots during this test. No visible ionisation glow may occur and Va must remain constant to within ± 3% during the last three minutes of test.

2. This test is to be done in an approved pulse tester, giving pulses of 2 to 3 microseconds duration with a repetition frequency 500 c/s.

ADMIRALTY SIGNAL AND RADAR ESTABLISHMENT

VALVE ELECTRONIC **CV1835**

Specification AD/CV1835 incorporating Jan-Issue No. 1 dated 11 Feb. 1955. 3B28. To be read in conjunction with K1006	SECURITY Specification: Unclassified Valve: Unclassified

TYPE OF VALVE: Half Wave, Xenon-filled Rectifier.

CATHODE: Directly Heated, Oxide coated.

ENVELOPE: Glass

PROTOTYPE: 3B28

MARKING
K1001/4
Add:- 3B28

BASE
US4B A4-10
K1006
Figure 15

RATINGS			Note
Filament Voltage	(V)	2.5	
Filament Current	(A)	5.0	
Min. Cathode Heating Time	(Secs.)	5	A
Rating (a)			
Max. Peak Inverse Voltage	(kV)	10.0	A
Max. Mean Anode Current	(mA)	250	
Max. Peak Anode Current	(A)	1.0	
Max. Frequency	(c/s)	150	
Rating (b)			
Max. Peak Inverse Voltage	(kV)	5.0	
Max. Mean Anode Current	(mA)	500	
Max. Peak Anode Current	(A)	2.0	
Max. Frequency	(c/s)	500	
Max. Permissible Ambient Temperature Range	(°C)	-55 to +75	A

CONNECTIONS

Pin	Electrode
1	Filament
2	No connection
3	No connection
4	Filament
T.C.	Anode

TOP CAP
CT3
B.S.448

DIMENSIONS (Inches)

Dimension	Min.	Max.
Length (Overall)	5.87	6.15
Diameter	-	2.07

NOTES

A. Absolute Maximum or Minimum Value.

Z.9231.R.

CV 1835

MIL-E-1/753A
17 December 1954
SUPERSEDING
MIL-E-1/753
13 August 1954

INDIVIDUAL MILITARY SPECIFICATION SHEET

ELECTRON TUBE, RECTIFIER, HALF-WAVE, GAS

JAN-3B28

This specification sheet forms a part of the latest issue of Military Specification MIL-E-1.

Ratings:	Ef	epx	ib	Io	tk	F	T	Alt
Absolute	Vac	kv	a	mAdc	sec(min)	cps	°C	ft
Maximum:	2.5±5%	10.0	1.0	250	5	150	-55 to +75	10,000
	2.5±5%	5.0	2.0	500	5	500	-55 to +75	10,000
Test Cond:	2.5	11	---	---	30	60	---	---

*Height: 5-7/8 in. min., 6-5/32 in. max. *Diameter: 2-1/16 in. maximum
**Base: Medium 4-Pin Bayonet, A4-10, Phenolic **Cap: Medium, C1-5

**Pin No.:	1	2	3	4	Cap
Element:	f	nc	nc	f shield	a

**Cathode: Coated Filament
**Envelope: T-16

For miscellaneous requirements see paragraph 3.3, Inspection Instructions for Electron Tubes.

Ref.	Test	Conditions		Min.	Max.	
3.1	Qualification Approval:	Required for JAN Marking				
4.9.18.1.3	Carton Drop:	(d) Package Group 1; Carton Size M				
4.5	Holding Period:	t=96 hrs.				
4.9.19.3	*Bump:	Angle=20°				
4.10.1.2	1/ *Peak Emission:	ib=5.0a	etd:	---	14.0	v
4.10.8	Filament Current:		If:	4.60	5.40	Aac
4.10.13	1/ Operation (1):	Io=250mAdc minimum; t=120 minimum				
4.10.13	**Operation (2):	epx=7.0kv; F=500cps; Io=500 mAdc; ib=2.0a; t=120 minimum				
4.11	Life Test (1):	Group C; epx=10kv; Io=250mAdc; ib=1.0a	t:	500	---	hrs
4.11	**Life Test (2):	Operation (2)	t:	500	---	hrs
4.11.4	Life Test End Point:	Peak Emission	etd:	---	17.0	v

Note 1: Reference specification shall be of the issue in effect on the date of invitation for bids.

MINISTRY OF SUPPLY - DLRD(A)/RRE (South)

VALVE ELECTRONIC **CV1881**

Specification MOS(A)/CV1881	SECURITY	
	Specification	Valve
Issue 4 Dated 24. 6. 55		
To be read in conjunction with K1001	UNCLASSIFIED	UNCLASSIFIED

→ Indicates a change

TYPE OF VALVE - Argon-filled Noise Tube

CATHODE - Directly-heated

ENVELOPE - Glass

PROTOTYPE - VX4144

MARKING

See K1001/4

BASE & CONNECTIONS

See Drawing on Page 3

DIMENSIONS

See Drawing on Page 3

MOUNTING POSITION

Any

RATING

		Note
Filament Voltage (V)	6.3	
Filament Current (A)	0.4	
Striking Voltage on DC (V)	1000	A
Normal Operating Voltage (Ia=180mA) (V)	60	
Max. Operating Current (mA)	250	
Nom. Continuous Operating Current (mA)	180	B
Nom. Noise Power Available (Ia=180mA) (db)	15.5	C
Nom. Noise Power Output Change with Current (db/mA)	-0.005	
Nom. Useful Working Frequency Range (Mc/s)	3000 to 12000	
Nom. Gas Pressure (mm)	30	

NOTES

A. With earthed metal sheath.

B. The discharge current should be adjusted for optimum matching conditions but must not fall below 160 mA if instability is to be avoided.

C. Relative to thermal noise at 17°C

To be performed in addition to those applicable in K1001

	Test	Test Conditions	AQL %	Insp. Level	Symbol	Limits Min.	Limits Max.	Units
a	Filament Current	Vf = 6.3V Note 1	6.5	I	If	0.35	0.45	A
b	VSWR	Vf = 6.3V f = 9375 ± 5Mc/s Note 2	6.5	I		0.95	-	-
c	Insertion Loss	Vf = 0 f = 9375 ± 5Mc/s Note 3	6.5	I		-	0.25	db
→ d	Torque Applied to each cap	See K1001/12.3	6.5	I		-	1.5	in-lb

NOTES

1. The valve shall be pre-heated for 15 secs before performing the test. The test shall be applied to each filament in turn.

2. The valve shall be inserted into an approved 15° E-plane mount on a No. WG16 waveguide system and terminated in a matched load. The empty mount shall be screw-tuned to give a VSWR of at least 0.98 : 1. The valve shall be operated at a discharge current of 180 ± 5mA. The power shall be derived from a matched source through an attenuation of at least 6 db.

3. The valve shall be inserted into an approved 15° E-plane mount on a No. WG16 waveguide system and terminated with a matched detector.
   Using an empty mount and not more than 1.0 mW RF derived from a matched source through an attenuation of at least 6 db, the detector reading shall be noted. The valve shall remain inert.

CV 1881

9" NOISE SOURCE TUBE. OUTLINE DIMENSIONS.

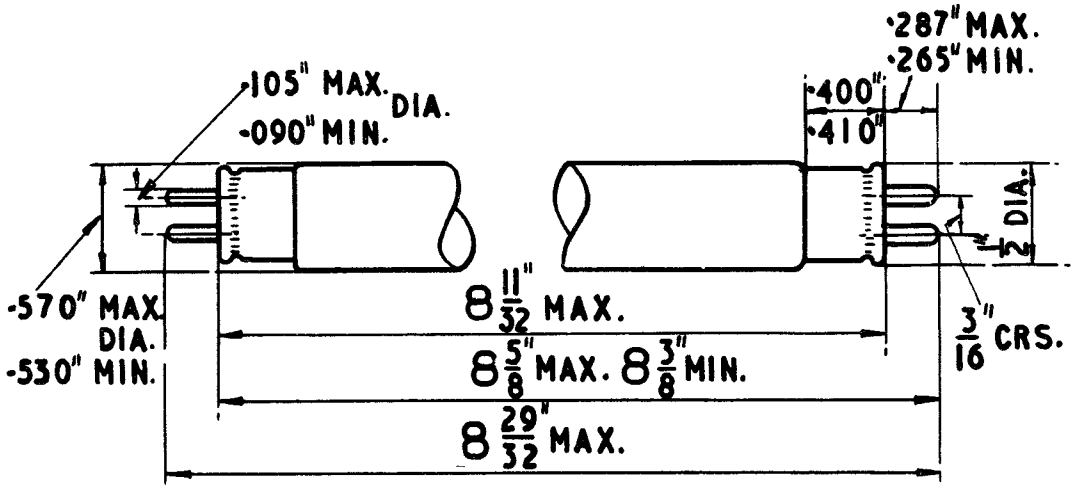

NOTE:- 1. THE PINS SHOULD ENTER A GAUGE CONSISTING OF TWO HOLES ·110" DIA. AT ·1875" CENTRES.

NOTE :-2. VALVE TO PASS THROUGH A TUBULAR GAUGE OF 0·610" INT. DIA. AND LENGTH 8 INCHES.

TEST MOUNT.

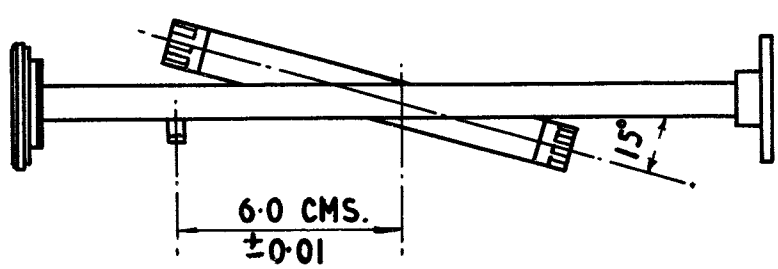

ADMIRALTY SIGNAL AND RADAR ESTABLISHMENT

VALVE ELECTRONIC

CV1916

Specification AD/CV1916 Issue 1 dated 10.10.58 incorporating MIL-E-1/765 dated 16th July 1954. To be read in conjunction with K1006.	SECURITY Specification Valve Unclassified Unclassified

Type of Valve Magnetron, fixed frequency, pulse type. **Cathode** Indirectly heated. **Envelope** Metal - Glass. **Prototype** 4J33.	**MARKING** K1001/4 Additional marking 4J33.

RATINGS

All limiting values are absolute

			Note
Heater Voltage	(V)	16.0	A
Heater Current	(A)	3.0	
Nominal Frequency	(Mc/s)	2780 to 2820	
Max. Mean Input Power	(W)	1200	B
Frequency Pulling Factor	(Mc/s)	15	
Typical Operating Conditions			C
Magnetic Field Strength	(Oersteds)	2700	D
Peak Anode Voltage	(kV)	28	
Peak Anode Current	(A)	40	
Peak Power Output	(kW)	400	

DIMENSIONS

See Drawing 240JAN

See Note E.

NOTES

A. The heater shall be switched on at least 3 minutes before HT voltage is applied. See Note 1 on Page 2 of MIL-E-1/765 dated 16th July 1954 for heater voltage conditions during periods of high anode dissipation.

B. Cooling air shall be supplied sufficient to prevent the anode temperature from exceeding 100°C.

C. These conditions refer to pulse operation with pulse duration of 2 μS, repetition rate of 500 pps and rate of rise of pulse voltage not exceeding 90 kV/μS.

D. The valve shall be operated with the north pole of the magnet adjacent to the cathode lead.

E. This drawing may be obtained on application to the Specifying Authority.

NOTES

1. The data and tests for Valve type JAN-4J33 shall apply.

2. This specification refers only to the American 4J33 with frequency range 2780 to 2820 Mc/s. No reference should be made to any test, clause, or condition specifically applicable to any of the other magnetrons, (viz., 4J31, 4J32, 4J34 or 4J35) shown on the following pages.

CV1916

MIL-E-1/765
16 July 1954

INDIVIDUAL MILITARY SPECIFICATION SHEET

ELECTRON TUBE, MAGNETRON, FIXED FREQUENCY, PULSE TYPE

JAN-4J31-35

This specification sheet forms a part of the latest issue of Military Specification MIL-E-1.

Ratings:	Ef	epy	ib	pi	Pi	tk	Du	tp	Anode T	Alt.
Absolute	V	kv	a	kw	W	sec	—	us	°C	ft.
Maximum:	16.0±10%	30	70	2000	1200	—	.001	2.5	100	10,000
Minimum:	—	—	—	—	—	120	—	—	—	

Pulsing Service Note 1 **Cathode: Oxide Coated Unipotential

For miscellaneous requirements, see Paragraph 3.3 Inspection Instructions for Electron Tubes.

Ref.	Test	Conditions		Min.	Max.	
3.1	Qualification Approval:	Required for JAN Marking				
4.5	Holding Period:	t=168 hours				
4.8	Insulation of Electrodes:	Omit				
4.9.8	**Salt Spray Corrosion:	Omit				
4.9.18.1.8	Carton Drop:	(1) Package Group 9 Carton Size E				
4.9.19.1	*Vibration:	No voltage				
4.9.19.2	**Vibration:	No voltage				
4.9.2	Dimensions:	Per drawing 240-JAN				
3.7.1.3	Marking:					
4.16.1	**Cooling:					
4.9.13	Pressurising:	40 to 45 lbs/sq. in. (absolute)				
4.10.8	Heater Current:	Ef=16.0V	If:	2.8	3.4	A
4.16.3	Oscillation(1):					
—	Coupling:	Per drawing 240-JAN				
4.16.3.1	Magnetic Field:	H=2700 gauss;Coil No. 400; Pole Tip Fig. No. 1				
4.16.3.2	Heater:	tk=120 (max) at Ef=16.0V; Ef=10.0V for test				
4.16.3.3	Pulse Characteristics:	tp=0.9 to 1.1 us;Du=.0005; trv=0.2 us (max)				
4.16.3.4	Average Anode Current: Standing Wave Ratio:	Ib=35mAdc δ=1.15/1(max.)				
4.16.3.5	Pulse Voltage:		epy:	26	30	kv
4.16.3.6.2	Power Output:	t=300(max.)	Po:	400	—	W

CV1916

Ref.	Test	Conditions		Min.	Max.
4.10.7.3	Frequency:		4J31 F:	2860	2900Mc
			4J32 F:	2820	2860Mc
			4J33 F:	2780	2820Mc
			4J34 F:	2740	2780Mc
			4J35 F:	2700	2740Mc
4.16.3.7	$\frac{1}{f}$ R.F. Bandwidth:		Bandwidth:	—	2.5Mc
4.16.5	*Pulling Factor:	Ib=20 to 35mAdc	ΔF:	—	15 Mc
4.16.7	Stability:	Note 2			
4.16.3	Oscillation(2):				
—	Coupling:	Per drawing 240-JAN			
4.16.3.1	Magnetic Field:	H=2700 gauss; Coil No. 400; Pole Tip Fig. No. 1			
4.16.3.2	Heater:	tk=120(max.) at Ef=16.0V; Ef=10.0V for test			
4.16.3.3	Pulse Characteristics:	tp=1.8 to 2.2 us; Du=.0006; trv=0.2 us(max.)			
4.16.3.4	Average Anode Current:	Ib=45mAdc			
	Standing Wave Ratio:	δ=1.15/1(max.)			
4.9.14	**Temperature Coefficient:		ΔF:	—	.07Mc/°C
4.9.15	**Low Temperature Operation:	tk=180(max);			
4.11	Life Test:	Group D; Osc. (1)	t:	500	—hrs.
4.11.4	Life Test End Point :	Osc. (1)	Po:	320	— W
			Bandwidth :	—	2.5 Mc

Note 1: During high voltage operation it is essential to operate the heater according to the following schedule:

Pi (watts)	Ef (volts)
1000 - 1200	8
800 - 1000	10.5
600 - 800	13
400 - 600	15
Less than 400	16

The above schedule is valid only for repetition rates of 300 pps or greater

Note 2: The tube is considered to be operating stably when the average current is constant, showing no appreciable kicks which are accompanied by flicker in a neon lamp used as an indicator of RF output, or by wide variations in the oscilloscope trace of input current or voltage. Stable operation shall be demonstrated over the last 30 seconds of a test interval not to exceed 5 minutes.

Note 3: Reference specification shall be of the issue in effect on the date of invitation for bid.

MINISTRY OF SUPPLY (D.L.R.D.(A)/R.A.E.)

VALVE ELECTRONIC

CV2130

Specification MOSA/CV.2130 Issue 6 Dated 11.1.55 To be read in conjunction with BS448,BS1409 & K1001	SECURITY Specification: UNCLASSIFIED Valve: UNCLASSIFIED

→ Indicates a change

TYPE OF VALVE - V.H.F. Power Tetrode (Transmitting)

CATHODE - Directly Heated

ENVELOPE - Glass - unmetallised

PROTOTYPE - QY3 - 125

MARKING

See K.1001/4

RATING

(All Limiting Values are Absolute)

			Note
Filament Voltage	(V)	5.0	
Filament Current	(A)	6.5	
Max. Anode Voltage	(kV)	3	B
Max. Screen Voltage	(V)	600	B
Max. Anode Dissipation	(W)	125	B
Max. Screen Dissipation	(W)	20	B
Max. Control Grid Dissipation	(W)	5	B
Max. D.C. Control Grid Voltage	(V)	-500	B
Max. D.C. Anode Current	(mA)	225	B
Mutual Conductance	(mA/V)	2.45	
Inner Amplification factor ($\mu g1$, g2)		6.2	
Max. Anode Top Cap Temperature		220°C	A

BASE

BS.448/B5F

CONNECTIONS

Pin	Electrode
1	f
2	g2
3	g1
4	g2
5	f
T.C.	a

CAPACITANCES (pF)

C in (nom.)	10.8
C out (nom.)	3.0
Ca, g1 (max.)	0.07

DIMENSIONS

See Drawing on Page 4 ←

NOTES

A. Forced Air Cooling is required at frequencies above 30 Mc/s.
The temperature of the anode seal shall not exceed 170°C.
The base seals shall be cooled by the circulation of at least 2 cubic feet of air per minute
For intermittent use the maximum temperature shall be 220°C.

B. Class C Telegraphy

Z.9515.R.

To be performed in addition to those applicable in K.1001

	Test Conditions					Test	Limits Min.	Limits Max.	No. Tested	Note
a	See K.1001/AIII									
	Links to H.P.		Links to L.P.	Links to E.		CAPACITANCES (pF)				
	3		1,2,4,5	6,7,8,9, 10, T.C.1, T.C.2		C in	9.2	12.4	6 per week	
	T.C.1		1,2,4,5,	3,6,7,8, 9,10, T.C.2		C out	2.5	3.5		
	T.C.1		3	1,2,4,5,6,7,8, 9,10, T.C.2		Ca, g1	-	0.07	T.A.	
	Vf	Va(kV)	Vg2	Vg1	Ia(mA)					
b	5.0	0	0	0	0	If	6.0	7.0	100% or S	
c	6.0	See Note 1				g1 Primary Emission (μA)	-	500	100%	1
d	6.0	See Note 2				g2 Primary Emission (μA)	-	500	100%	2
e	5.0	2.5	500	Adjust	50	Vg1 (V)	-63	-80	100%	
f	5.0	2.5	500	Adjust	50	Ig1 (μA)	-	10	100%	
g	5.0	400(V)	400	100	-	Ig1 (mA)	-	50	100%	3
h	5.0	-	300	Adjust	-	μg1, g2	5.2	6.5	20 per week	4
k	5.0	Anode, g2 and g1 strapped with 2.5 kV Peak applied				Peak Emission (A)	4.0	-	100%	
m	5.0	3.0	350	-	100	Power Output (W) Ig2 (mA)	175 15	- 50	20 per week	5
n	5.0	3.0	350	-	100	Power Output (W)	175	-	T.A.	6

NOTES

1. With anode and g2 floating, the 50 c/s A.C. volts applied to g1 through suitable rectifiers, shall be adjusted to heat the grid during the (+)ve half-cycles and give mean Ig1 = 170 mA D.C. The grid emission shall be measured during the (-)ve half-cycles. Test duration = 15 seconds minimum.

2. With anode floating, the 50 c/s A.C. volts applied to g2 through suitable rectifiers, shall be adjusted to heat the grid during the (+)ve half-cycles and give a mean Ig2 = 75 mA D.C. The grid emission shall be measured during the (-)ve half-cycles. Test duration = 15 seconds minimum.

CV2130

NOTES (Continued)

3. Ig1 must increase continuously when Vg1 is increased uniformly from 0 - 1 volt.

4. Anode floating; Vg1 D.C. adjusted to give Ig2 = 60 mA.

5. Power oscillation test frequency = 15 Mc/s; Rg1 = 15000 ohms

6. Power oscillation test frequency = 120 Mc/s; Rg1 = 15000 ohms

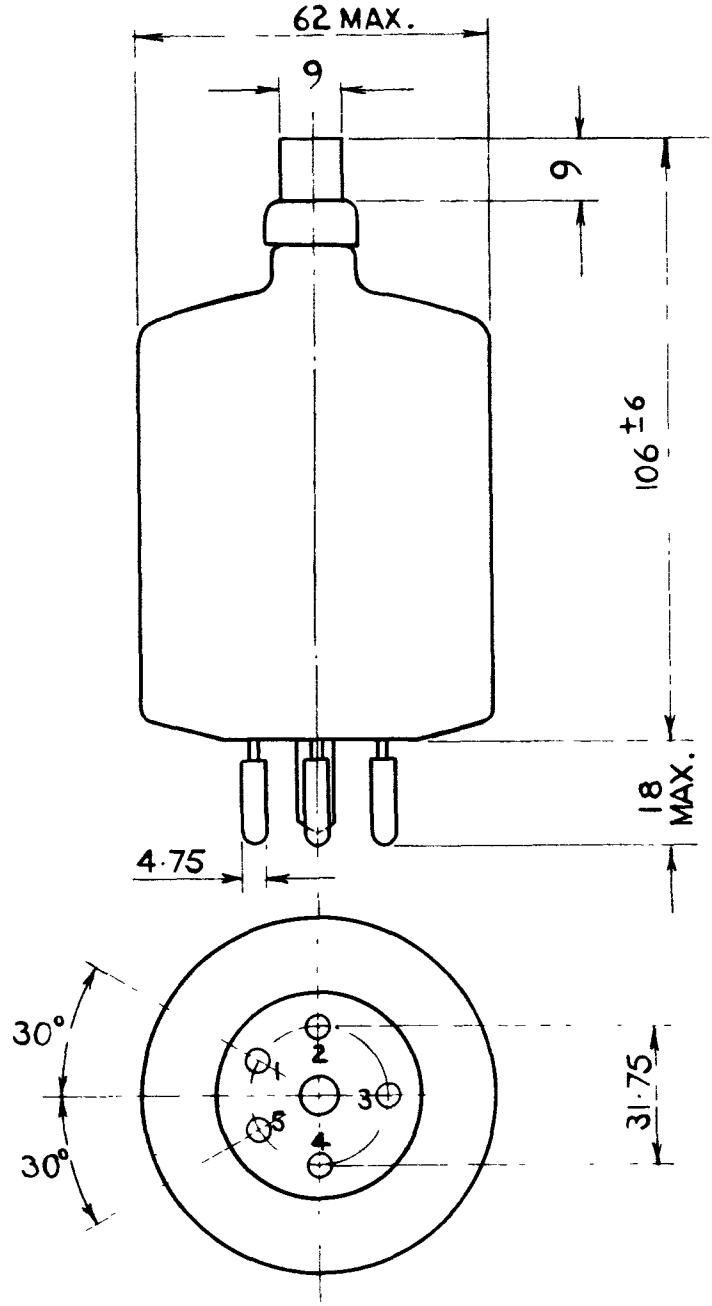

ALL DIMENSIONS IN MILLIMETRES

MINISTRY OF SUPPLY - D.L.R.D.(A)/R.A.E.

VALVE ELECTRONIC **CV2131**

Specification MOSA/CV.2131 Issue 6 Dated 29.5.56 To be read in conjunction with BS448 BS1409 and K1001	SECURITY Specification: UNCLASSIFIED Valve: UNCLASSIFIED

——————→ Indicates a change

TYPE OF VALVE - Transmitting Tetrode

CATHODE - Directly Heated

ENVELOPE - Glass, unmetallised

PROTOTYPE - QY4 - 250

MARKING

See K.1001/4

RATINGS

		Note
Filament Voltage (V)	5.0	
Filament Current (A)	14.1	
Max. Anode Voltage (kV)	4	A,C
Max. Screen Voltage (V)	600	A,C
Max. Anode Dissipation (W)	250	A,C
Max. Screen Dissipation (W)	35	A,C
Max. Control Grid Dissipation (W)	10	A,C
Max. D.C. Control Grid Voltage (V)	-500	A,C
Max. D.C. Anode Current (mA)	350	A,C
Mutual Conductance (mA/V)	4.0	
Inner Amplification Factor (μg1,g2)	5.25	
Max. Anode Top Cap Temperature	170°C	A,B

BASE

B.S.448/B5F

CONNECTIONS

Pin	Electrode
1	f
2	g2
3	g1
4	g2
5	f
T.C.	a

CAPACITANCES (pF)

C in (nom.)	12.6
C out (nom.)	4.4
Ca, g1 (max.)	0.14

DIMENSIONS

See Drawing on Page 3

NOTES

A. Absolute value.

B. Forced Air cooling is required at frequencies above 30 Mc/s. The temperature of the anode seal shall not exceed 170°C. The base seals shall be cooled by the circulation of at least 2 cubic feet of air per minute.

C. Class C. Telegraphy.

Z.11975.R.

CV2131

TESTS

To be performed in addition to those applicable in K.1001

	Test Conditions					Test	Limits		No. Tested	Note
							Min.	Max.		
	See K.1001/AIII									
	,Links to H.P.		Links to L.P.		Links to E	CAPACITANCES (pF)				
a	3		1,2,4,5,		6,7,8,9,10, T.C.1,T.C.2	C in	10.70	14.50	6 per week	
a	T.C.1		1,2,4,5		3,6,7,8,9, 10,T.C.2	C out	3.70	5.10		
a	T.C.1		3		1,2,4,5,6, 7,8,9,10, T.C.2	Ca, g1	-	0.14	T.A.	
	Vf	Va(kV)	Vg2	Vg1	Ia(mA)					
b	5.0	0	0	0	0	If (A)	13.5	14.7	100% or S	
c	6.0	See Note 1				g1 Primary Emission (µA)	-	500	100%	1
d	6.0	See Note 2		0	-	g2 Primary Emission (µA)	-	500	100%	2
e	5.0	2.5	500	Adjust	100	Vg1 (V)	-65	-95	100%	
f	5.0	2.5	500	Adjust	100	Ig1 (µA)	-	10	100%	
g	5.0	-	500	Adjust	-	µg1,g2	4.5	6.0	20 per week	3
h	5.0	Anode, g2 and g1 Strapped with 2.5 kV Peak applied				Peak Emission (A)	4.0	-	100%	
→ j	5.0	3.0	350	-	200	Power Output (W) Ig2 (mA)	350	- 100	20 per week	4
k	5.0	3.0	350	-	200	Power Output (W)	350	-	T.A.	5

NOTES

(1) With anode and g2 floating, the 50c/s A.C. volts applied to g1 through suitable rectifiers, shall be adjusted to heat the grid during the (+)ve half cycles and give a mean Ig1 = 200 mA D.C. The grid emission shall be measured during (-)ve half cycles. Test duration to be 15 seconds minimum.

(2) With anode floating, the 50 c/s A.C. volts applied to g2 through suitable rectifiers shall be adjusted to heat the grid during the (+)ve half cycles and give a mean Ig2 = 170 mA D.C. The grid emission shall be measured during (-)ve half cycles. Test duration to be 15 seconds minimum.

NOTES (Cont'd)

(3) Anode earthed, V_{g1} adjusted to give:

I_{g2} = 70 mA.

(4) Power oscillation test frequency = 15 Mc/s:

R_{g1} = 12,000 ohms.

(5) Power oscillation test frequency = 75 Mc/s:

R_{g1} = 12,000 ohms.

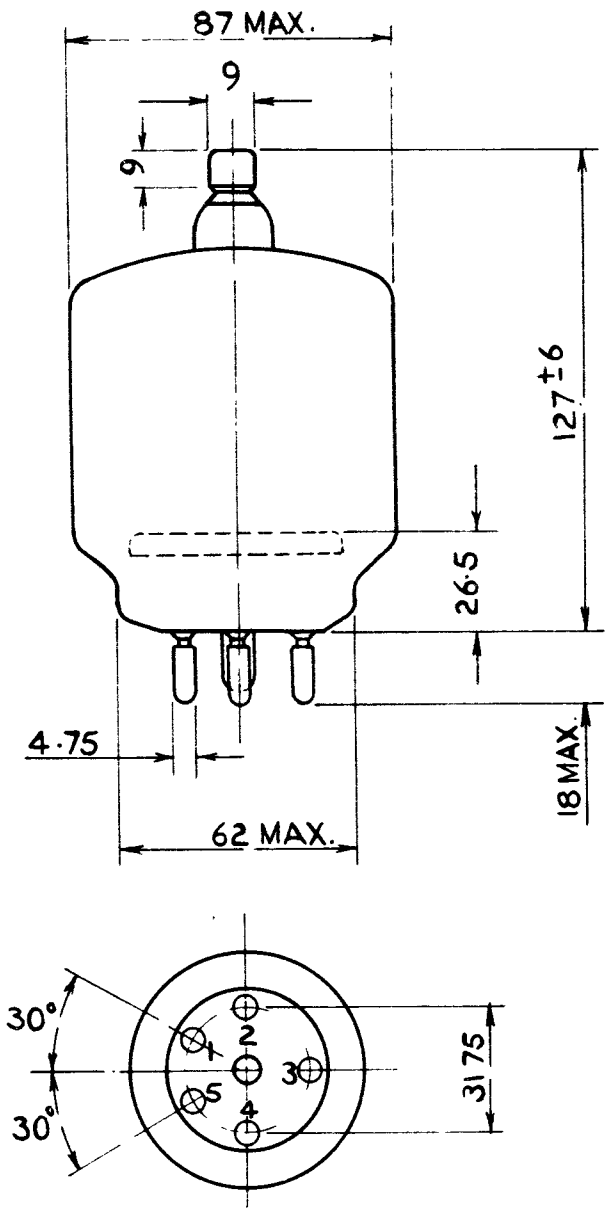

ALL DIMENSIONS IN MILLIMETRES.

VALVE ELECTRONIC CV2160

ADMIRALTY SIGNAL AND RADAR ESTABLISHMENT

Specification AD/CV2160 Issue No.4 dated 13/9/57 To be read in conjunction with K1001	**SECURITY** **Specification** Unclassified **Valve** Unclassified

→ Indicates a change

TYPE OF VALVE: High Vacuum, High Voltage, Half-wave Rectifier. **CATHODE:** Directly heated, Thoriated Tungsten. **ENVELOPE:** Glass **PROTOTYPE:** VX374	**MARKING** See K1001/4 **BASE** G.E.S.

RATINGS

All limiting values are absolute

			Note
Filament Voltage	(V)	4.0	
Filament Current	(A)	12.0	
Max. Mean Anode Power Dissipation	(W)	130	
→ Max. Peak Anode Inverse Voltage	(kV)	40	A
→ Min. Total Emission	(A)	2.5	

CONNECTIONS

Base Thread - f
Base Button - f
T.C. - a

DIMENSIONS

See K1001/A.1/D.1

Dimension(mm)	Min.	Max.
A	-	250 ←
B (SEE NOTE B BELOW)	-	60 ← A1

TOP CAP

See K1001/A.1/D.5.7

MOUNTING POSITION

Vertical with Top Cap Uppermost.

NOTES

→ A. The valve will operate satisfactorily at the maximum rated value of peak anode inverse voltage even when the mean anode power dissipation is at the maximum rated value of 130 Watts.

B. NO PART OF THE VALVE, INCLUDING ITS BASE AND ANY CORONA RING, IS TO EXCEED 60 M.M. IN DIAMETER A1

Z.15146.R.

TESTS

To be performed in addition to those applicable in K1001, and after a Holding Period of 14 days.

Test Conditions		Test	Limits		No. Tested	Note
Vf(r.m.s.) V	Va		Min.	Max.		
4.0	0	If (A)	11.5	12.5	100%	1
0	-70kV for 2 mins. (see note 2)	Inverse Voltage (i) Sparking	-	Nil		
		(ii) Field Emission (μA)	-	20	100%	2
4.0	300V for 3 mins.	Ia (mA)	425	575	100%	3
4.0	3 kV applied briefly - See K1001/A.5	Emission (A)	2.5	6.0	100%	
4.0	See Note 4	Life Test (i) Sparking during test	-	Nil	T.A. and as in Note 5	
		(ii) Emission after 1000 hours (A)	2.0	-		4,5

NOTES

The filament shall be heated at Vf = 4V for at least 2 minutes before If is measured.

The anode voltage shall vary sinusoidally with time from 0 to the peak value of -70kV at a frequency of 50 c/s. The "Field Emission" is the maximum value of the current indicated by a d.c. microammeter in the anode circuit.

There shall be no sign of arc-back or sparking during the test.

The anode voltage shall be maintained at 300V for 3 minutes. During the last minute of this period the anode current shall be constant to within ± 5 mA.

The valve shall be operated for at least 1000 hours in a half-wave rectifier circuit at 50 c/s, with peak anode inverse voltage of 40 kV, and with a mean anode power dissipation of 130W. This operation may be done in a "[illegible]r" circuit in which the inverse anode voltage is supplied by a [illegible]oltage low-current transformer and in which the forward and [illegible]e is supplied by a medium-voltage medium-current transform[illegible]. A permissible life test procedure shall be to subject the val[illegible] short periods of operation at the specified mean anode dissipation [illegible]igible inverse anode voltage, alternating with short periods of operation at zero anode dissipation and the maximum rated peak inverse anode voltage. Thus with the circuit shown in Fig. 1, it will be permissible to operate the valve during the test as follows:-

One valve [illegible] valve satisf[illegible] shall be ac[illegible] valve from 1 fails under satisfactor[illegible]

(a) S shall be connected to A for 1 minute with the transformer T1 adjusted to give a mean anode dissipation of about 130 watts.

(b) At the end of 1 min. as in (a), S shall be switched rapidly from A to B and left connected to B for 1 minute with the transformer T2 adjusted to provide a peak inverse anode voltage of 40 kV in the valve.

(c) At the end of the minute as in (b), S shall be switched rapidly from B back to (A), and the operation as in (a) repeated.

The operations (a), (b) and (c) shall be repeated thirty times

VALVE ELECTRONIC CV216

ADMIRALTY SIGNAL AND RADAR ESTABLISHMENT

Specification AD/CV2160 Issue No.4 dated 13/9/57 To be read in conjunction with K1001	**SECURITY** **Specification** Unclassified **Valve** Unclassifie

→ Indicates a change

TYPE OF VALVE:	High Vacuum, High Voltage, Half-wave Rectifier.	**MARKING** See K1001/4
CATHODE:	Directly heated, Thoriated Tungsten.	**BASE** G.E.S.
ENVELOPE:	Glass	
PROTOTYPE:	VX374	

RATINGS

All limiting ...

CONNECTIONS

FIG. 1.

Min.	Max.
-	250
-	60
WATER	BELOW

P

/D.5.7

OSITION

Top Cap

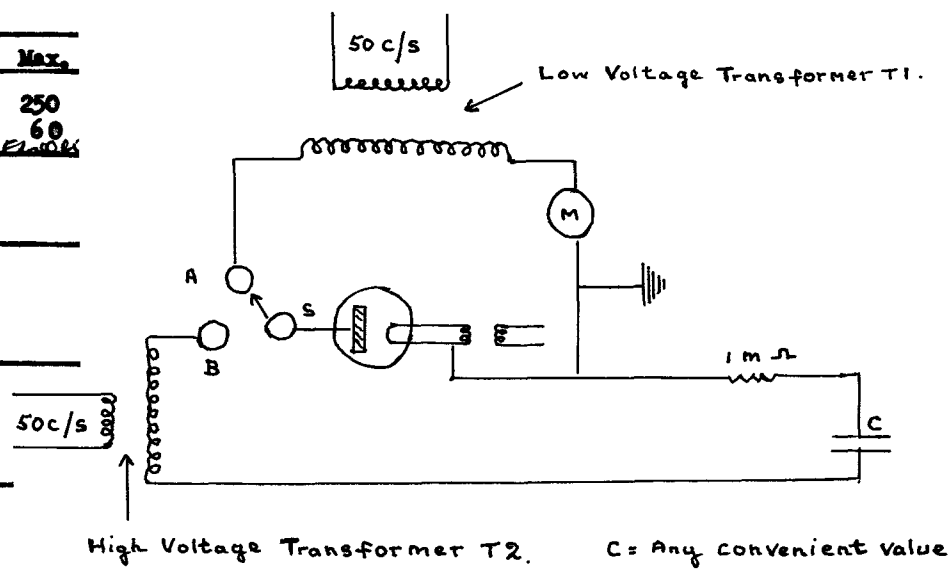

voltage of 40 kV in the valve.

(c) At the end of the minute as in (b), S shall be switched rapidly from B back to (A), and the operation as in (a) repeated.

The operations (a), (b) and (c) shall be repeated thirty times an hour throughout the period of the test.

During the test there shall be no sign of arc-back or sparking in the valve.

MINISTRY OF SUPPLY (R.R.E.)

VALVE ELECTRONIC CV2171

Specification MOS/CV2171/Issue 2 Dated 4.3.59 → To be read in conjunction with BS448, BS1409 and K1001 ignoring clause 5.8.	SECURITY Specification UNCLASSIFIED	 Valve UNCLASSIFIED

→ Indicates a change

TYPE OF VALVE:- Noise diode for frequencies up to 500 Mc/s.
CATHODE:- Directly heated, tungsten
ENVELOPE:- Glass, unmetallised
PROTOTYPE:- VX3120

MARKING

See K1001/4

RATING			Notes
Normal filament voltage	(V)	3.7-4.4	C
Mean filament current at Vf = 3.7V	(A)	0.58	
Mean saturated anode current at Vf = 3.7V	(mA)	5	A
Mean filament current at Vf = 4.4V	(A)	0.64	
Mean saturated anode current at Vf = 4.4V	(mA)	20	B
Max. filament voltage	(V)	4.8	
Max. anode voltage	(V)	200	
Max. saturated anode current	(mA)	20	
Max. anode dissipation	(W)	2	

BASE

B7G/1.1. ←

Pin	Electrode
1	Anode
2	(Getter support)
3	Filament
4	Filament
5	Anode
6	-
7	(Filament Spring)

DIMENSIONS

See BS448. B7G/2.1. SIZE REF [illegible]

CAPACITANCES (pF) (with external shield)	
Ca.f	0.8
Ca.all	2.3

PACKAGING

See K1005

NOTES:- See page 2

Z.18882.

To be performed in addition to those applicable in K1001

	Test Conditions		Tests	Limits		No. Tested
	Vf (V)	Va(V)		Min.	Max.	
(a)	4.0		If (A)	0.57	0.65	100% or S
(b)	4.0	100	Ia (mA)	6	16	100%

NOTES

A:- The design of the valve shall be such that the saturated emission of 5 mA shall be obtained with Va not greater than 40 volts.

B:- At a saturated emission of 20 mA the life of the valve is reduced to 100-300 hours.

C:- The value of the saturated anode current is regulated by variation of the filament voltage. With a 6.3 volt filament supply a series variable resistor of 10 ohms max. will be suitable for most purposes.

MINISTRY OF SUPPLY (R.R.D.E.)

VALVE ELECTRONIC CV 2274

Specification MOS/CV2274/Issue 2. Dated:- 6.2.53 To be read in conjunction with K1001 ignoring clauses:- 5.2, 5.8	SECURITY Specification: Unclassified Valve: Unclassified

TYPE OF VALVE:- Broad Band T.B. Cell

PROTOTYPE:- VX4134

MARKING

See K1001/4

RATING		Note
Min. transmitter peak power (kW)	5.0	
Max. transmitter peak power at 0.001 duty cycle (kW)	100	
Frequency coverage (Mc/s)	9500 to 9700	

DIMENSIONS

See drawing page 4

PACKAGING

See K1005

NOTES

1. At least one washer of the dimensions shown in the drawing on page 4 shall be supplied with each valve.

To be performed in addition to those applicable in K1001.

	Test Conditions	Test	Limits Min.	Limits Max.	No. Tested	Note
a	Valve mounted as shown in drawing on page 5 and terminated in a matched load. Test frequency = 9600 Mc/s ± 0.05%.	Tuning Susceptance	-0.06	+0.06	100%	1
b	As for test "a".	Equivalent Conductance		- 0.05	100%	2
c	Valve mounted as shown in drawing on page 5 and terminated in a matched load. Test frequency in band 9500-9700 Mc/s. Line to be energised with 4 kW peak RF with T_p = 1.0 µsec. ± 10% and p.r.f. = 1000 c/s ± 10%. Test to be performed at least 7 days after pumping, and at least 24 hours after any previous discharge.	Firing Time (secs) Time interval between application of power and tube firing.		- 10	100%	
d	As for test "c"	Arc Loss (db)		- 0.8	100%	3
e	Valve mounted as shown in drawing on page 5 and terminated in a matched load. Test frequency in band 9500-9700 Mc/s. Line to be energised with 12-15 kW peak RF test power derived from a higher power source through an attenuation of not less than 6 db with T_p = 1 µsec. ± 10% and p.r.f. = 1000 c/s ± 10%.	Recovery Loss (db) After 2 µsec. (measured between trailing edge of transmitter pulse and leading edge of signal pulse of frequency 9600 Mc/s ± 0.05%).		- 2.0	100%	
f	As for test "a"	Loaded Q		- 6.5	T.A.	4

TESTS (Contd.)

CV 2274

	Test Conditions	Test	Limits		No. Tested	Note
			Min.	Max.		
g	As for test "e" Load standing wave ratio to be better than 0.97	High Level Standing Wave Ratio	0.91	-	5%	5

NOTES

1. The susceptance may be measured by comparing the phase of the reflector with that of the valve that is resonant at the test frequency. The susceptance is given by:-

$$\frac{B}{Y_o} = \frac{1 + 2\,G/Y_o}{2} \tan\frac{4\pi\Delta 1}{\lambda g} \simeq (1.1)\,\frac{2\pi\Delta 1}{\lambda g} \text{ for small } \Delta 1$$

Where λ_g is the guide wavelength and $\Delta 1$ is the phase shift measured in the same units as λ_g and where G/Y_o is assumed to be 0.05.

2. A curve of SWR vs. Frequency is plotted around a centre value of 9600 Mc/s. The valve is resonant (B = 0) at the frequency corresponding to the maximum SWR. The value of SWR is:-

$$\sigma = \frac{1}{G/Y_o} + 1 \text{ therefore } G/Y_o = \frac{1}{\sigma - 1}$$

If the valve has passed the susceptance test ($B < 0.06\ Y_o$), the SWR measured as 9600 Mc/s is very nearly equal to $\frac{1}{G/Y_o} + 1$ and may be used to measure G.

3. The power loss in the arc shall be less than 680 W peak:-

$$\frac{p}{p - pL} = \frac{4000}{4000-680} = 1.20\ (0.8\ db)$$

4. Loaded Q is defined as:-

$$QL = Fo\ \frac{dB/Y_o}{dF} \Big/ 2(1 - G/Y_o) \qquad \text{where } F_o = 9600 \text{ Mc/s.}$$

CV2274

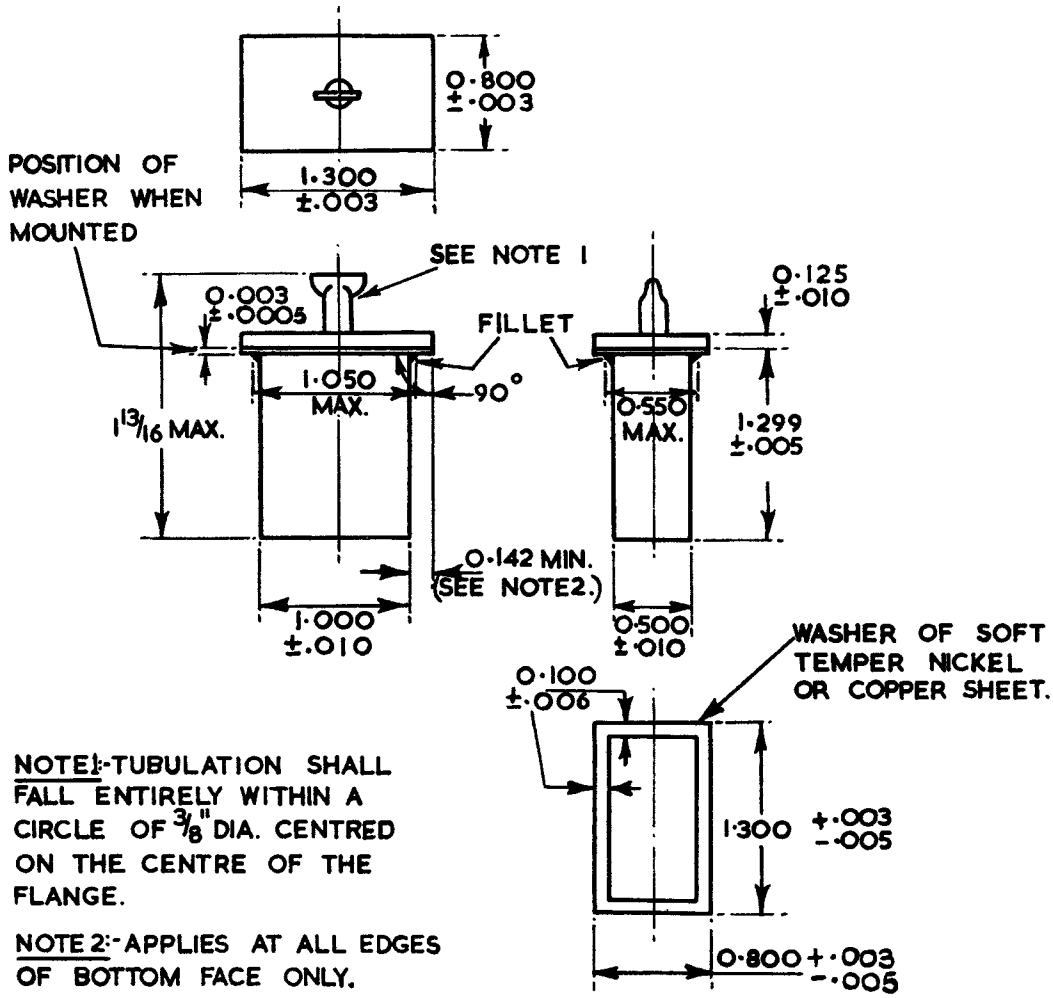

NOTE 1:-TUBULATION SHALL FALL ENTIRELY WITHIN A CIRCLE OF 3/8" DIA. CENTRED ON THE CENTRE OF THE FLANGE.

NOTE 2:-APPLIES AT ALL EDGES OF BOTTOM FACE ONLY.

NOTE 3:-VALVE TO BE FINISHED TINNED.

ALL DIMENSIONS IN INCHES.

MOUNT FOR TESTING CV2274

NOTE 1. 0·015 CUT-AWAY AT SIDE OF WAVEGUIDE MEASURED FROM THE PLANE OF THE INNER SURFACE OF THE TOP OF THE WAVEGUIDE.

NOTE 2. 0·030 TO 0·040 SPACING ALL ROUND THE VALVE.

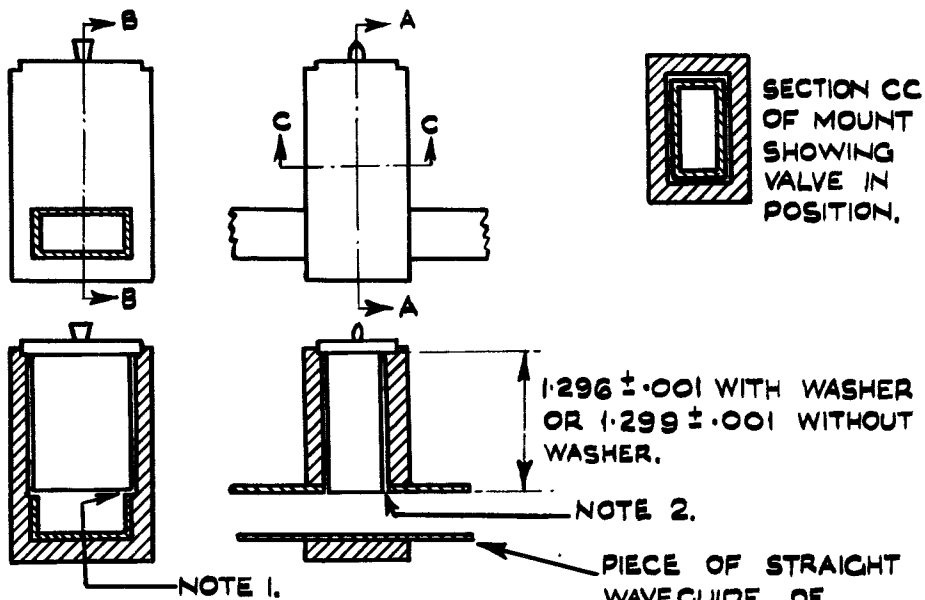

ALL DIMENSIONS IN INCHES.

ADMIRALTY SIGNAL AND RADAR ESTABLISHMENT

VALVE ELECTRONIC **CV2308**
CV2309

Specification AD/CV2308, CV2309 Issue No. 2 Dated 17.8.55. To be read in conjunction with K1001	SECURITY Specification: Unclassified Valve: Unclassified

→ Indicates a change

TYPE OF VALVE: Broad Band T.B. Cell

PROTOTYPES: VX4142 (BS.116)
VX4143 (BS.118)

MARKING
See K1001/4

RATING		Note
Operating frequency:		
CV2308 (Mc/s)	9050 to 9600	
CV2309 (Mc/s)	8500 to 9050	
Max. Transmitter Peak Power at 0.001 duty cycle (kW)	50	A
Min. Transmitter Peak Power (kW)	5	

DIMENSIONS

CV2308 - See drawings, Pages 4 and 6

CV2309 - See drawings, Pages 5 and 6

NOTES

A. Absolute Maximum Value

B. At least one washer of the dimensions given in the drawing on pages 4 and 5 shall be supplied with each valve.

TESTS

To be performed in addition to those applicable in K1001

	Test Conditions	Test	Limits Min.	Limits Max.	No Tested	Note
a	Valve shall be mounted as shown in drawing on page 6 and terminated in a matched load (V.S.W.R. better than 1.03). Test frequency:- CV2308 = 9325 Mc/s ±0.05% CV2309 = 8775 Mc/s ±0.05%	Equivalent Conductance G/Yo	-	0.10	100%	1
b	As for Test (a)	Tuning Susceptance B/YO	-0.06	+0.06	100%	2
c	Valve shall be mounted as shown in drawing on page 6 and terminated in a matched load (V.S.W.R. better than 1.03) Test at a frequency between 8500 and 9600 Mc/s. Line to be energised with 4kW peak R.F. power with Tp = 1.0 µsecs. ± 10% and p.r.f. 1000 c/s ± 10%. Test to be performed at least 7 days after pumping and at least 24 hours after any previous discharge.	Firing Time (Secs) Time interval between application of power and valve firing (measured at least 24 hours after any previous discharge)	-	10	100%	
d	As for Test (c) ignoring the last sentence.	Arc Loss (dB)	-	0.8	100%	3
e	Valve shall be mounted as shown in drawing on page 6 and terminated in a matched load. Test at a frequency between 8500 and 9600 Mc/s. Line to be energised with 12-15kW peak R.F. power derived from a higher power source through an attenuator of not less than 6 dB with Tp = 1.0 µsec. ± 10% and p.r.f. = 1000 c/s ± 10%.	Recovery Loss (dB) After 2 µsecs. (measured between trailing edge of transmitter pulse and leading edge of a signal pulse of the same frequency as the test frequency).	-	2.0	100%	

TESTS

To be performed in addition to those applicable in K1001

	Test Conditions	Test	Limits		No. Tested	Note
			Min.	Max.		
f	As for Test (a)	Loaded Q	-	6.5	T.A.	4
g	As for Test (e) Load V.S.W.R. to be better than 1.02.	High Level Voltage Standing Wave Ratio	-	1.11	5%	

NOTES

1. The effect of susceptance on the V.S.W.R. is negligible at the test frequency; therefore, the equivalent conductance $\frac{G}{Yo}$ can be taken as equal to $\frac{1}{r-1}$, where r is the V.S.W.R.

2. Susceptance may be measured by comparing the phase of the reflection from the valve with the phase of the reflection from another valve known to be resonant at the test frequency. Then, provided $\Delta\lambda$ is small,

$$\frac{B}{Yo} \doteq \left(1 + \frac{2G}{Yo}\right) \frac{2\pi\Delta\lambda}{\lambda g}$$

where λ g is the guide wavelength and $\Delta\lambda$ is the phase difference measured in the same units as λ g.

3. That is, the power loss in the arc shall be less than 680W peak.

4. Loaded Q is defined as:-

$$\text{Loaded Q} = \frac{Fo \frac{d}{dF}\left(\frac{B}{Yo}\right)}{2\left(1 + \frac{G}{Yo}\right)}$$

where Fo = Test Frequency.

SCALE: TWICE FULL SIZE.

ALL ·142 MIN DIMENSIONS TO BE MEASURED AT A-A.

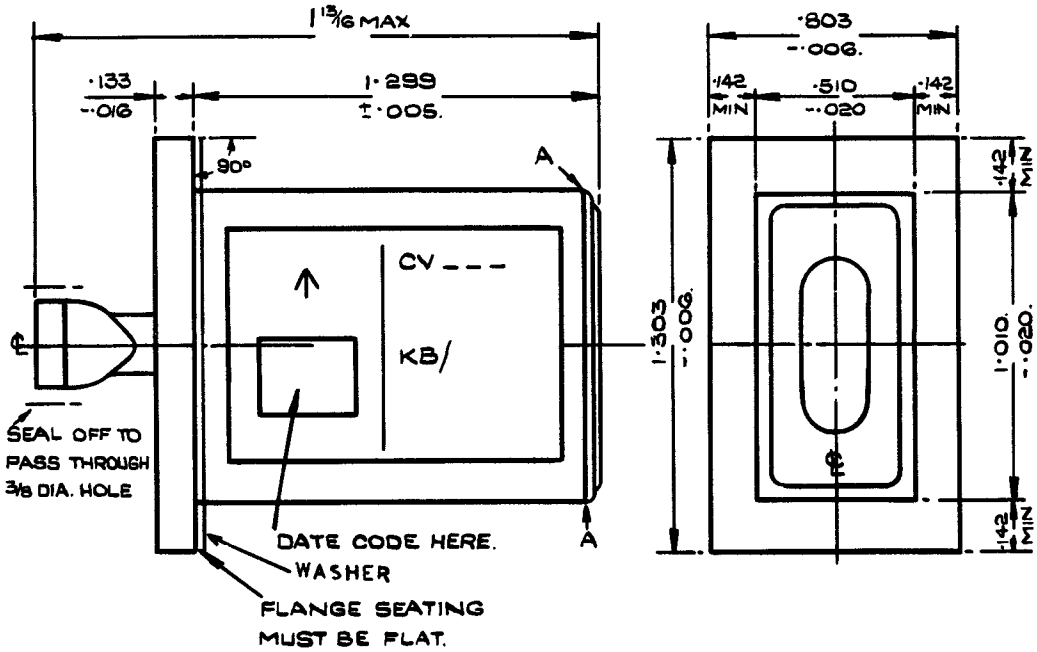

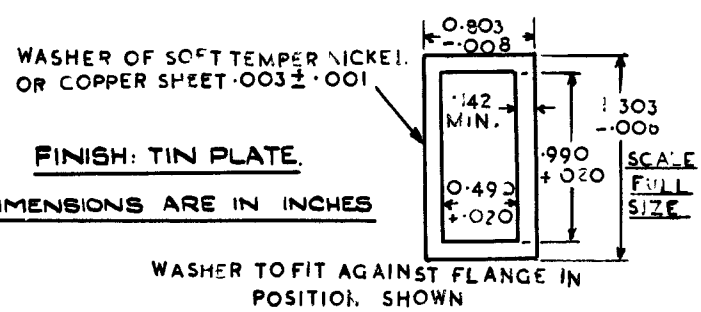

FINISH: TIN PLATE.

ALL DIMENSIONS ARE IN INCHES

CV2309

SCALE: TWICE FULL SIZE.

ALL ·142 MIN. DIMENSIONS TO BE MEASURED AT A-A.

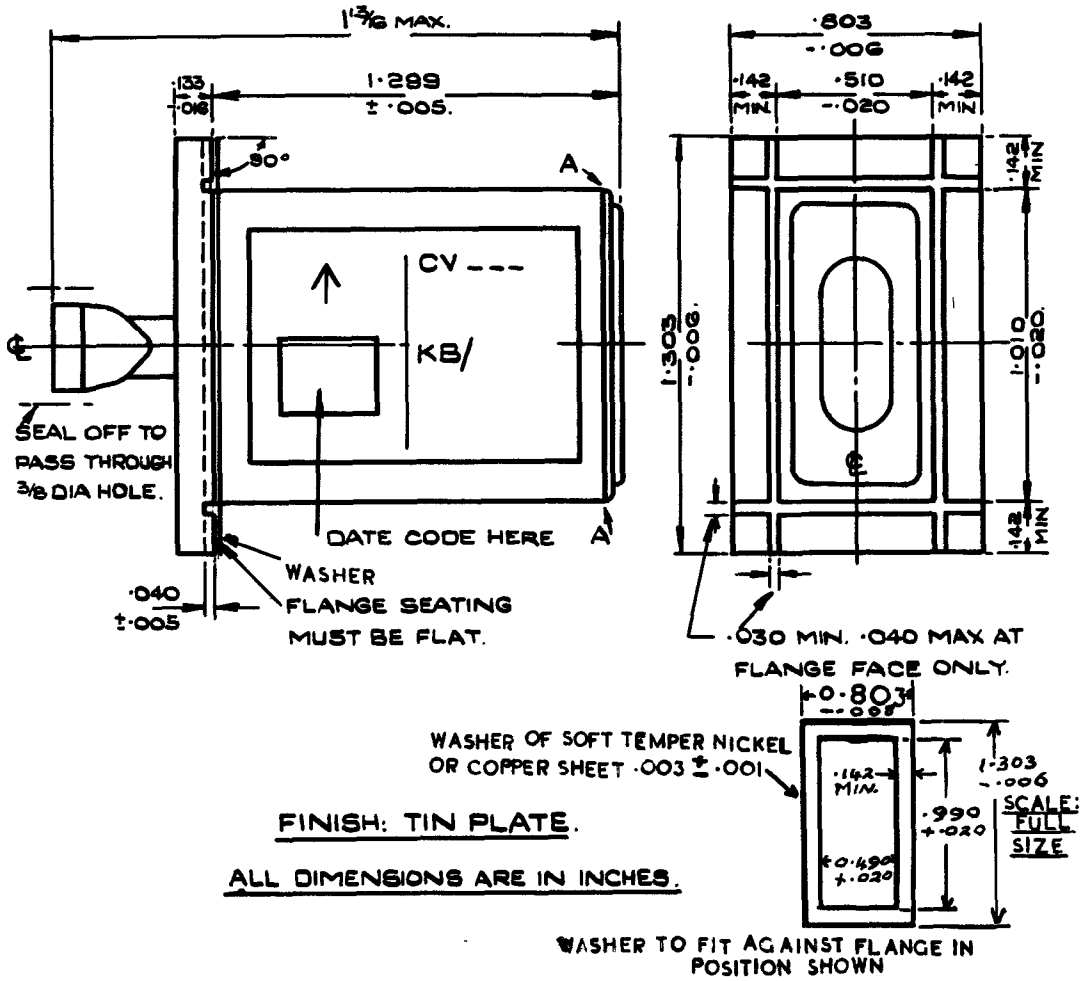

FINISH: TIN PLATE.

ALL DIMENSIONS ARE IN INCHES.

CV2308
CV2309

MOUNT FOR TESTING

NOTE 1. 0·015 CUT-AWAY AT SIDE OF WAVEGUIDE MEASURED FROM THE PLANE OF THE INNER SURFACE OF THE TOP OF THE WAVEGUIDE.

NOTE 2. 0·030 TO 0·040 SPACING ALL ROUND THE VALVE.

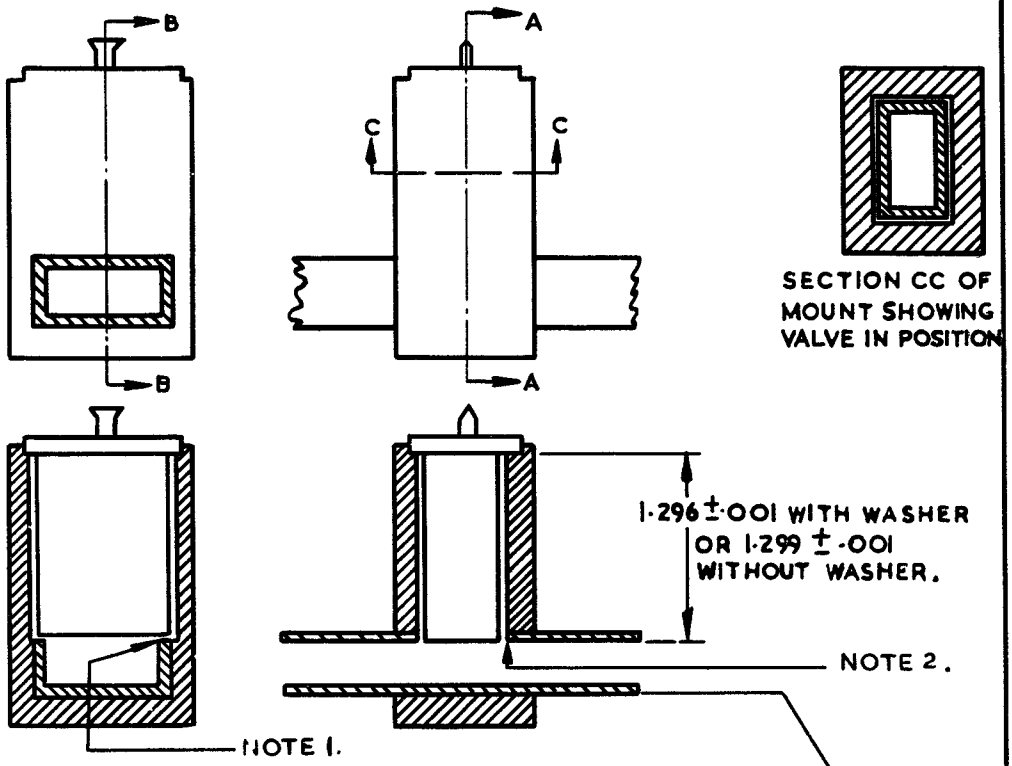

SECTION CC OF MOUNT SHOWING VALVE IN POSITION

SECTION AA OF MOUNT SHOWING VALVE IN POSITION.

SECTION BB OF MOUNT SHOWING VALVE IN POSITION.

PIECE OF STRAIGHT WAVEGUIDE OF INTERNAL DIMENSIONS 0·4 BY 0·9.

ALL DIMENSIONS IN INCHES.

VALVE ELECTRONIC **CV 2311**

MINISTRY OF TECHNOLOGY - DLRD/RRE.

Specification Mintech/CV2311 Issue No. 4A, Dated May 1968. To be read in conjunction with K1001	SECURITY	
	Specification	Valve
	UNCLASSIFIED	UNCLASSIFIED

⟶ Indicates a change

TYPE OF VALVE - Twin-primer Broad-band TR Cell (improved version)
PROTOTYPE - VX1027

MARKING

See K1001/4.

RATING

			Note
Operating Frequency Range	(MHz)	9180 to 10000	
Max. Peak Power	(kW)	250	A,B
Min. Peak Power	(kW)	4	A
Min. Primer Supply Voltage	(V)	-950	
Max. Main Primer Current	(μA)	185	C
Min. Main Primer Current	(μA)	100	C
Max. Auxiliary Primer Current	(μA)	80	C
Min. Auxiliary Primer Current	(μA)	50	C

DIMENSIONS AND CONNECTIONS

See Drawing on Page 6

TOP CAPS

CT1

(See BS 448, 6/1.1)

Notes

A. With duty cycle of 0.001.

B. Operation at this power level results in considerably reduced life. For satisfactory operation at power levels above 50 kW it is recommended that the valve be preceded by a pre - TR cell.

C. The primer currents shall be limited by series resistance of which at least 1 megohm must be placed adjacent to each primer.

D. If necessary the valve may be used with single primer operation.

CV2311

TESTS

To be performed in addition to those applicable in K1001

	Test Conditions		Test	Limits		No. Tested	Note
				Min.	Max.		
	Primer Supply Voltage (V)						
a	-900	Test shall be performed at least 7 days after any previous discharge	Primer Breakdown (secs) The delay between the application of primer voltage simultaneously to each primer, and the breakdown, shall be measured.	-	5	100%	1
b	-1000		Primer Operating Voltage (V) The voltage of both primers shall be measured after breakdown has occurred.	180	340	100%	1
c	-1000	Line to be energised with not more than 10 mW r.f. and terminated in a load matched better than 1.02 v.s.w.r.	VSWR (i) Measured at frequencies 9180 MHz and 10,000 MHz.	-	1.30	100%	1
			(ii) Measured at frequencies 9400 MHz, 9600 MHz, 9800 MHz.	-	1.20	100%	1&2
d	-1000	Valve shall be mounted between impedances matched better than 1.10 vswr. Line shall be energised with not more than 10 mW r.f. Test frequency = 10,000 MHz.	Insertion Loss (db)	-	0.8	100%	1&2

TESTS (Cont'd)

CV 2311

Test Conditions			Test	Limits		No. Tested	Note
				Min.	Max.		
e	-1000	Test frequency = 9375 MHz ± 50 MHz, prf = 1000 Hz ± 10%. Power output 200 kW ± 15%. Rate of rise of magnetron voltage 100 kV/ sec ± 10%. Pulse length measured to 10% of peak power. (i) 0.15 µS ± 15%. (ii) 1.0 µS ± 10%.	<u>High Power Leakage</u> (i) Spike energy (ergs/pulse) (ii) Total power (mW Peak)	 - 35	 0.3 100	 100% 100%	1, 3 and 4
f	-1000	The test frequency of the simulated echo pulse shall be within the range 9180 to 10,000 MHz, and its power, incident on the cell, shall be less than 10 mW peak rf. Test frequency of the transmitter pulse shall be 9375 ± 50 MHz and power 200 kW ± 15%. Tp = 1.0 µS. ± 10%. prf = 1000 Hz ± 10%.	<u>Recovery Time</u> The time shall be measured from the trailing edge of the transmitter pulse for an insertion loss exceeding that immediately before the transmitter pulse by: (i) 6 db (µS) (ii) 2 db (µS)	 - -	 3 8	 5% (6) 5% (6)	 1&5 1&5
g	-1000	Applied power varied from 100 mW to 100 W. Tp = 1.0 µsec ± 10% Other conditions as Test (e).	<u>Low Power Leakage</u> (mW Peak) Maximum total leakage power is recorded.	-	250	5% (6)	1

CV 2311

TESTS (Cont'd)

Test Conditions			Test	Limits		No. Tested	Note
				Min.	Max.		
h	-1000	Test frequencies, 9180, 9600 and 10,000 MHz. Line shall be energised at a convenient low power level.	Electrical Length The length of RCSC No. 16 waveguide having the same effective electrical length as the cell, shall be determined at the following three frequencies (i) at 9180 MHz (degrees)	192	232	5% or 6 per week whichever is the greater	1 and 2
			(ii) at 9600 MHz (degrees)	280	320		
			(iii) at 10,000 MHz (degrees)	366	406		
j	-1000	As for Test (e)	Position of Short (ins) The distance of the effective rf short behind the front flange of the cell shall be measured.	0.014	0.028	QA	1
k	-1000	Line shall be energised with not more than 4 kW rf measured immediately after the cell. Other conditions as for Test (e).	Arc Loss (db)	-	0.8	QA	1
l	-1000	6 valves to be mounted on E-plane T junctions followed by a matched load. Input power not exceeding 60 kW. Output power not less than 40 kW. Other conditions as in Test (e) (ii).	Life Test Valves to be run for 500 hrs. Tests c-g to be performed at 0, 50, 100, 200, 300 and 500 hours. Number of valves which at any one time exceed Life test limits in any respect (Note 5). (No.)		1	QA	1 & 5

TESTS (Cont'd)

CV2311

Test Conditions			Test	Limits		No. Tested	Note
				Min.	Max.		
m	-1000	The cell shall be operated for one hour with the air pressure in the waveguide on the input side maintained at 30 lbs/sq.in. absolute. Tp = 1.0 µsec ± 10%. Other conditions as for Test (e).	High Power	-	-	QA	1

NOTES

1. The primer supply shall be d.c. having a peak-to-peak ripple voltage not exceeding 1% and shall be negative with respect to the body of the cell. The regulation of the supply shall be negligible at load currents up to 0.3 mA. The supply shall be connected to the main primer through resistances totalling 5.5 megohms ± 5% and to the auxiliary primer through resistances totalling 12.5 megohms ± 5%. At least 1 megohm shall be placed adjacent to each primer terminal.

2. An approved sampling test may be employed. If a batch fails to meet this, all valves shall be subjected to the specification test.

3. This test is to be performed using Valve Type CV2284 (4J50 magnetron). Measurements are to be made with a thermistor mount having the following characteristics:-

   Efficiency E (ratio of $\frac{\text{measured power}}{\text{incident power}}$) to be greater than 90%

   V.S.W.R. to be greater than 0.9 over 9375 ±100 MHz and greater than 0.75 over 9375 ± 250MHz.

   If the measured leakage powers are P_1 and P_2 in µW at pulse durations of 0.15 µS (t_1) and 1.0 µS (t_2), and the pulse repetition frequency is f then

   (i) spike energy = $\frac{10P_1}{Ef}$ ergs/pulse

   (ii) total power = $\frac{1000\ P_2}{Ef\ t_2}$ mW peak

4. The minimum limit for total leakage is a manufacturing test limit applying to new valves only.

NOTES (Cont'd)

5. Life Test Limits

V.S.W.R. (all test frequencies)	Max. 1.4
Insertion loss (db)	Max. 1.0
Breakthrough (i) spike (ergs/pulse)	Max. 0.3
(ii) total power (mW peak)	Max. 100
Recovery time (i) 6 dB (μS)	Max. 10
(ii) 2 db (μS)	Max. 20
Low Power Leakage (mW)	Max. 250

OUTLINE DRAWING

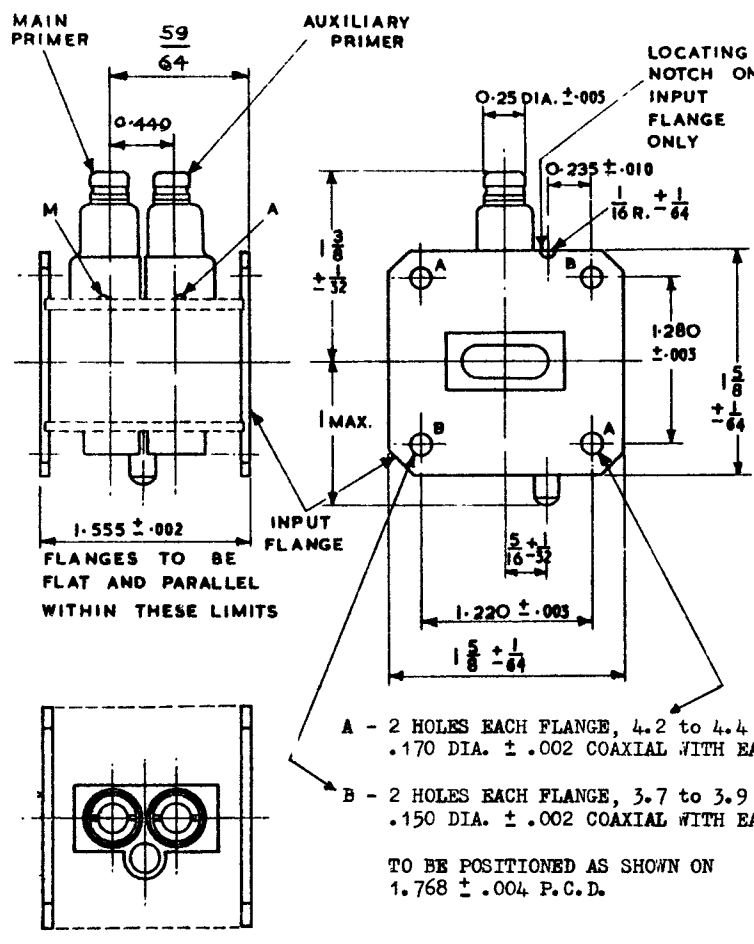

THIRD ANGLE PROJECTION
ALL DIMENSIONS IN INCHES

MINISTRY OF TECHNOLOGY - DLRD/RRE

VALVE ELECTRONIC **CV2312**

Specification Mintech/CV 2312 Issue No. 4A, Dated May, 1968. To be read in conjunction with K1001 and BS.448	SECURITY Specification: UNCLASSIFIED Valve: UNCLASSIFIED

→ Indicates a change

TYPE OF VALVE - Twin-primer Broad-Band TR Cell (Improved version)

PROTOTYPE - VX1028

MARKING

See K1001/4

RATING		Note	
Operating Frequency range	(MHz)	8500 to 9300	
Max. Peak Power	(kW)	250	A,B
Min. Peak Power	(kW)	4	A
Min. Primer Supply Voltage	(V)	-950	
Max. Main Primer Current	(μA)	185	C
Min. Main Primer Current	(μA)	100	C
Max. Auxiliary Primer Current	(μA)	80	C
Min. Auxiliary Primer Current	(μA)	50	C

DIMENSIONS AND CONNECTIONS

See Drawing on Page 6
See Note E

TOP CAPS

CT1
(See BS.448 : 6/1.1)

NOTES

A. With duty cycle not exceeding 0.001

B. Operation at this power level results in considerably reduced life. For satisfactory operation at power levels above 50 kW it is recommended that the valve be preceded by a pre - TR Cell.

C. The Primer Currents shall be limited by series resistances of which at least 1 megohm must be placed adjacent to each primer

D. If necessary the valve may be used with single primer operation. This must be the MAIN primer.

E. The superstructure of the cell which has no dimensions specified is providing support for the cell and electrodes. Any stress or strain applied to the superstructure may possibly impair the performance or reliability of the cell. Under no circumstances should such superstructure be used wholly or in part as a location reference plane or for the purpose of a support for component parts of ancillary equipment.

To be performed in addition to those applicable in K1001

Test Conditions			Test	Limits		No. Tested	Note
				Min.	Max.		
	Primer Supply Voltage (V)						
a	-900	Test shall be performed at least 7 days after any previous discharge.	Primer Breakdown (secs) The delay between the application of primer voltage simultaneously to each primer and the breakdown shall be measured.	-	5	100%	1
b	-1000		Primer Operating Voltage (V) The voltage of both primers shall be measured after breakdown has occurred.	180	340	100%	1
c	-1000	Line shall be energised with not more than 10 mW rf. terminated in a load matched better than 1.02 vswr.	VSWR Measured at frequencies 8500, 8700, 8900, 9100 and 9300 MHz.	-	1.30	100% or S	1, 2
d	-1000	Valve shall be mounted between impedances matched better than 1.10 vswr. Line shall be energised with not more than 10 mW r.f.. Test Frequency = 8500 MHz	Insertion Loss (db)	-	0.8	100% or S	1, 2
e	-1000	Test Frequency = 8900 MHz ± 75 MHz p.r.f. = 1000 Hz ± 10% Power Output = 200 kW Peak ± 15% Rate of Rise of Magnetron voltage = 100 kV/μsec ± 10%. Pulse lengths measured at 10% of peak amplitude (i) 0.15 μsec ± 15%. (ii) 1.0 μsec ± 10%.	High Power Leakage (i) Spike Energy (ergs/Pulse)	-	0.30	100%	1, 3 and 4
			(ii) Total Power (mW Peak)	35	100	100%	

TESTS (Contd)

CV2312

Test Conditions			Test	Limits Min.	Limits Max.	No. Tested	Note
f	-1000	The test frequency of the simulated echo pulse shall be within the range 8500 to 9300 MHz , and its Power incident on the cell shall be less than 10 mW peak r.f..Test frequency of the transmitter pulse shall be 8900 ± 75 MHz and power 200 kW ± 15% peak r.f. tp = 1.0µS. ± 10% PRF - 1000 Hz ± 10%	Recovery Time The time shall be measured from the trailing edge of the transmitter pulse for an insertion loss exceeding that immediately before the transmitter pulse by:-				
			(i) 6 db (µS)	-	3	5%(6)	1
			(ii) 2 db (µS)	-	8	5%(6)	
g	-1000	Applied Power varied from 100 mW to 100W. tp = 1.0 µS ± 10%. Other conditions as for Test e(ii)	Low Power Leakage (mW peak) The total leakage power through the cell shall be measured as the applied power is varied from 100 mW to 100W.	-	250	5%(6)	1
h	-1000	Test frequencies 8500, 8900 and 9300 MHz. Line shall be energised at a convenient low power level.	Electrical Length The length of RCSC No.16 Waveguide having the same effective electrical length as the cell shall be determined				
			(i) at 8500 MHz (degrees)	137	177	100% or S	1 and 2
			(ii) at 8900 MHz (degrees)	234	274		
			(iii) at 9300 MHz (degrees)	312	352		
j	-1000	As for Test e(ii)	Position of Short (ins) The distance of the effective r.f. short behind the front flange of the cell shall be measured.	0.014	0.028	QA	1

Test Conditions			Test	Limits		Tested	Note
				Min.	Max.		
k	-1000	The line shall be energised with not more than 4 kWr.f. measured immediately after the cell. Other conditions as for e(ii)	Arc Loss (db)	-	0.8	Q.A.	1
m	-1000	6 valves to be mounted on E plane T junctions followed by a matched load. Input power not exceeding 60 kW, output power not less than 40 kW. Other conditions as in test e (ii)	Life Test Valves to be run for 500 hours. Test c - g to be performed at 0, 50, 100, 200, 300 and 500 hours. Number of valves which at any one time exceed life test limits in any respect. (Note 5) (No.)	-	1	Q.A.	1, 5
n	-1000	The cell shall be operated for one hour with the air pressure in the waveguide on the input side maintained at 30 lbs/sq. in absolute. Tp = 1.0 µsec ± 10%. Other conditions as for Test e(ii)	High Power	-	-	Q.A.	1

NOTES

1. The primer supply shall be D.C. having a peak-to-peak ripple voltage not exceeding 1% and shall be negative with respect to the body of the cell. The regulation of the supply shall be negligible at load currents up to 0.3 mA. The supply shall be connected to the main primer through resistances totalling 5.5 MΩ ± 5% and to the axiliary primer through resistances totalling 12.5 MΩ ± 5%. At least 1 MΩ shall be placed adjacent to each primer terminal.

2. An approved sampling test may be employed. If a batch fails to meet this, all valves shall be subjected to the specification test.

3. This test is to be performed using Valve Type CV2284 (4J50 magnetron). Measurements are to be made with a thermistor mount having the following characteristics:-

Efficiency E $\frac{\text{(ratio of measured power)}}{\text{incident power}}$ to be greater than 90%

v.s.w.r. to be greater than 0.9 over 8900 ± 100 MHz and greater than 0.75 over 8900 ± 250 MHz.

If the measured leakage powers are P_1 and P_2 in μW at pulse durations of 0.15 μS(t_1) and 1.0 μS(t_2), and the pulse repetition frequency is f then

(i) spike energy = $\frac{10P_1}{Ef}$ ergs/pulse

(ii) total power = $\frac{1000P_2}{Ef\ t_2}$ mW peak

4. The minimum limit for total leakage is a manufacturing test limit applying to new valves only.

5. Life Test Limits

During life test, the limits applicable to the tests contained in clauses c - g (inclusive) shall be amended to the following:-

V.S.W.R. (All test frequencies)	Max. 1.4
Insertion Loss (db)	Max. 1.0
Breakthrough (i) spike (ergs/pulse)	Max. 0.3
(ii) total power (mW peak)	Max. 100
Recovery time(i) 6 db (μS)	Max. 10
(ii) 2 db (μS)	Max. 20
Low Power Leakage (mW)	Max. 250

OUTLINE DRAWING

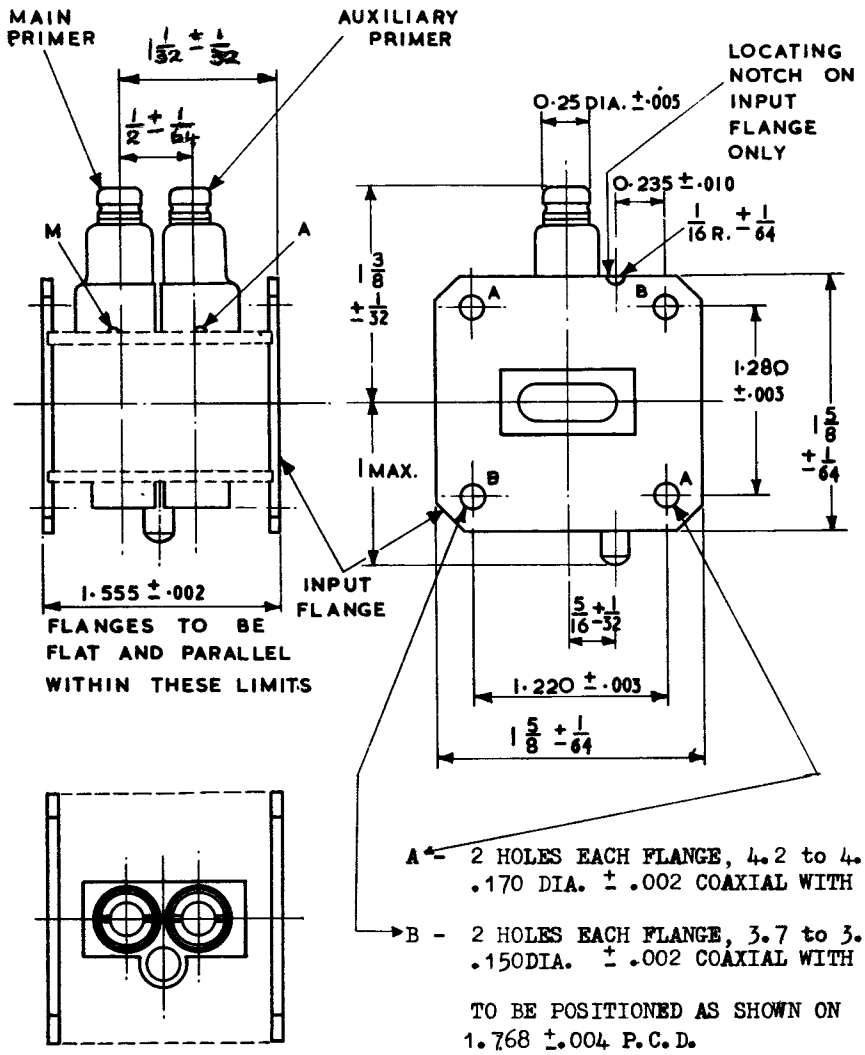

A – 2 HOLES EACH FLANGE, 4.2 to 4.4 mm or .170 DIA. ± .002 COAXIAL WITH EACH OTHER.

B – 2 HOLES EACH FLANGE, 3.7 to 3.9 mm or .150DIA. ± .002 COAXIAL WITH EACH OTHER.

TO BE POSITIONED AS SHOWN ON 1.768 ±.004 P.C.D.

THIRD ANGLE PROJECTION

ALL DIMENSIONS IN INCHES

MINISTRY OF SUPPLY - DLRD(A)/RRE (South)

VALVE ELECTRONIC **CV2325**

Specification MOS(A)/CV2325	SECURITY	
Issue 1 Dated 26. 5. 54.	Specification	Valve
To be read in conjunction with K1001.	UNCLASSIFIED	UNCLASSIFIED

TYPE OF VALVE - Decade Selector Tube
CATHODES - Cold
ENVELOPE - Glass-Unmetallised
PROTOTYPE - GS10C

MARKING

See K1001/4

BASE

B12A
with bottom cap

RATING

		Note
Max. Counting Speed (digits/sec.)	4000	A,B
Max. Striking Voltage (V)	400	C
Min. Anode Current (μA)	250	
Max. Anode Current (μA)	550	
Nominal Maintaining Voltage at 300 μA (V)	192	
Maximum P.D. between Guides and Cathodes (V)	140	
Signal Pulse Amplitude (V)	145	A
Min. Pulse Duration (μS)	50	A
Min. Quiescent Period (μS)	200	A
Guide Bias (V)	36	A
Sine-wave Amplitude Second Guide (V RMS)	55	B
Phase Advance, First Guide (degrees)	45	B
Guide Bias (V)	0	B
Max. Cathode Loads (ohms)	270000	

CONNECTIONS

Pin	Electrode
1	Cathode 0
2	" 9
3	" 8
4	" 7
5	" 6
6	" 5
7	" 4
8	" 3
9	" 2
10	" 1
11	Second Guides
12	First Guides
Bottom Cap	Anode

DIMENSIONS

See K1001/A1/D1
also Drawing on Page 3

Dimensions (mm)	Min.	Max.
A	83.5	90.5
B	30.9	33.1
C	-	35.0
L	63.5	70.5
Bottom Cap Length	5.3	8.1
Bottom Cap Dia.	6.2	6.5

MOUNTING POSITION

Any

NOTES

A. When operating in the circuit shown in Fig. 1 on Page 3.

B. When operating in the test circuit shown in Fig. 2 on Page 3.

C. Measured with normal room illumination.

CV2325

TESTS

To be performed in addition to those applicable in K1001.

	Test Conditions	Test	Limits Min.	Limits Max.	No. Tested	Note
a	400V shall be applied through 560K to anode. Each cathode and each group of guides shall be connected to earth in turn. Tube shall be tested in normal room daylight.	Time to Strike (secs) Test shall be performed 12 times.	-	10	100%	
b	Ia shall be adjusted to 300 μA for each cathode and guide in turn.	Maintaining Voltage (V) Test shall be performed 30 times.	186	198	100%	
c	The tube shall be operated in the test circuit shown in Fig. 2 on Page 3. Sine waves shall be applied to the tube to produce a clockwise rotation of glow at 4 kc/s.	Tube must divide accurately in the ratio 10:1.	-	-	100%	
d	As for Test (c), but with anti-clockwise rotation of glow at 4 kc/s.	As for Test (c)	-	-	100%	
e	Each cathode in turn, shall be connected to earth and 440V applied to anode through 560K. First and second guides shall be at +45V.	Glow must appear only at the tip of the appropriate cathode. Tests shall be performed 10 times.	-	-	100%	
f	50V shall be applied between each electrode and parallel connection of the remainder in turn.	Insulation (megohms)	100	-	100%	

CV2325

FIGURE 1.

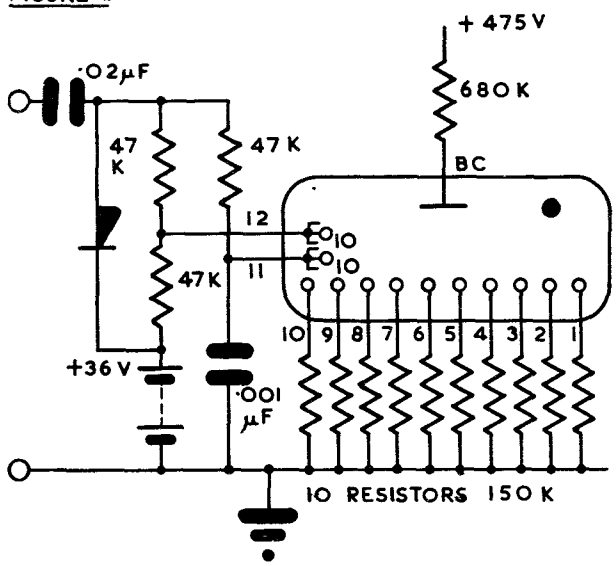

FIGURE 3.

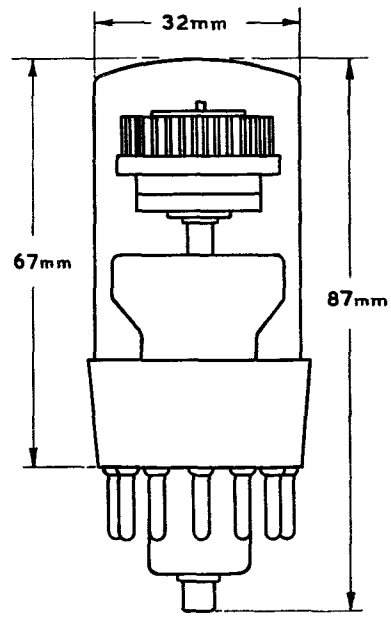

FIGURE 2.

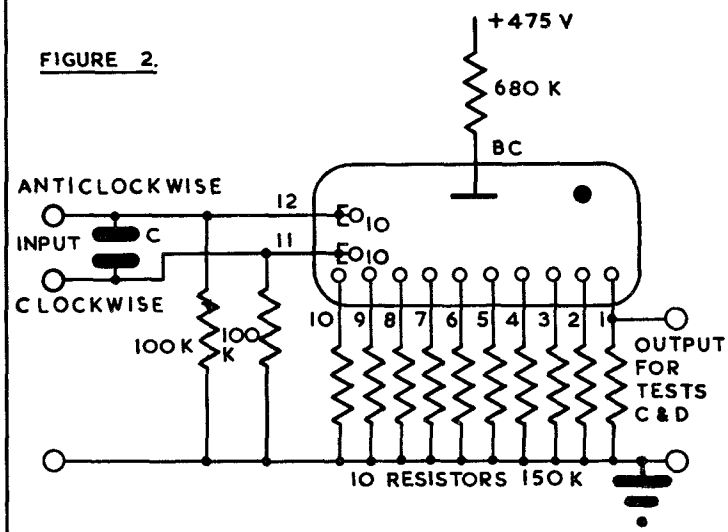

CATHODE No.1 IS ALIGNED WITH PIN No.11 TO WITHIN ± 12°.

THE VALUE OF C IS CHOSEN TO PRODUCE A 45° PHASE ADVANCE AT 4 kc/s C = 680 pF.

VALVE ELECTRONIC CV2341

ADMIRALTY SIGNAL AND RADAR ESTABLISHMENT

Specification AD/CV2341 Issue No. 1 Dated : 21.1.55 To be read in conjunction with K1001	SECURITY Specification: Unclassified Valve: Unclassified

TYPE OF VALVE:- Coaxial Noise Diode for frequencies up to 1000 Mc/s. CATHODE:- Directly heated tungsten. ENVELOPE:- Metal and glass. PROTOTYPE:- VX3138	MARKING See K1001/4

RATING		Note	DIMENSIONS
Max. Filament Voltage	(V) 5.0	A, B	See drawing, Page 3
Max. Filament Current	(A) 4.0	A, B	
Max. Saturated Anode Current	(mA) 200	A, C	
Anode Voltage for saturation at all Anode Currents	(V) 200	C, D	
Max. Anode Voltage	(V) 400	A	
Max. Anode Dissipation without Forced Air Cooling	(W) 10	A	
Max. Anode Dissipation with Forced Air Cooling	(W) 40	A, E	
Characteristic Impedance (approx.)	(Ω) 70		

NOTES

A. Absolute Maximum Value.

B. Emission (of the order of a milliampere) may be expected to commence at 2.0 Volts and 2.4 Amps.

C. The value of the saturated Anode Current is regulated by variation of the filament voltage.

D. The estimated life at 200 mA Anode Current is 30 hours. At 20 mA Anode Current it is 1000 hours.

E. For anode dissipations over 10W an air flow of at least 2.5 cubic feet per minute between the fins is required.

TESTS

To be performed in addition to those applicable in K1001

	Test Conditions			Test	Limits		No. Tested
	Vf (V)	Va (V)	Ia (mA)		Min.	Max.	
a	3.0	-	-	If (A)	2.6	3.2	100%
b	-	200	15	If (A)	2.85	3.15	100%
c	-	200	200	If (A)	3.6	4.0	100%

NOTE

The insertion of the valve in a correctly terminated 70 Ω coaxial line shall not result in a V.S.W.R. less than 0.9 at 280 Mc/s. This is a Type Approval Test.

CV2341

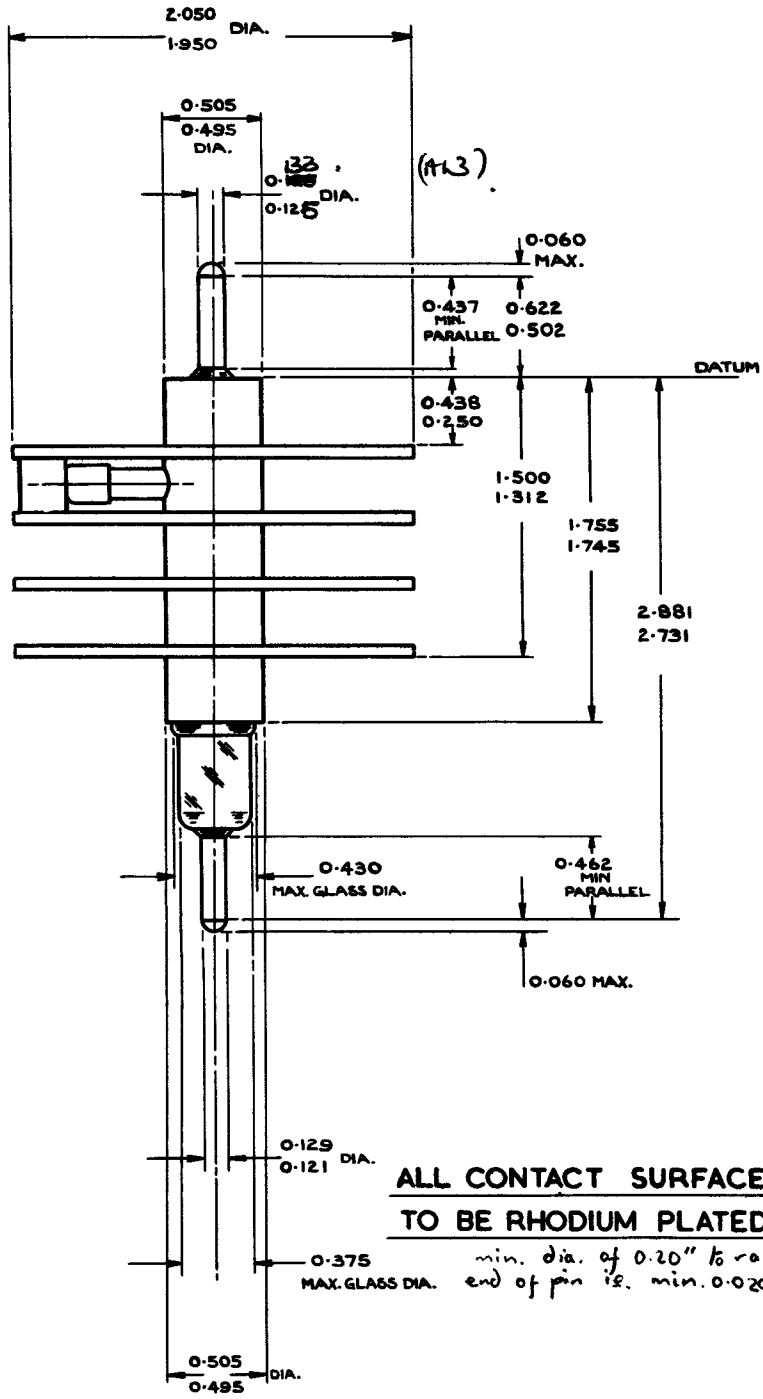

ALL CONTACT SURFACES TO BE RHODIUM PLATED

min. dia. of 0.20" to radius of end of pin ie. min. 0.020" max. 0.060" (AL1)

ALL DIMENSIONS ARE IN INCHES.

CONCENTRICITY GAUGES.

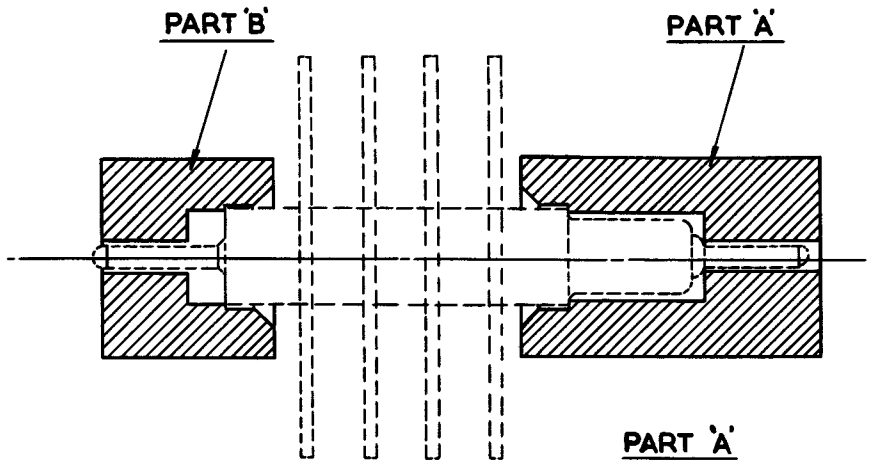

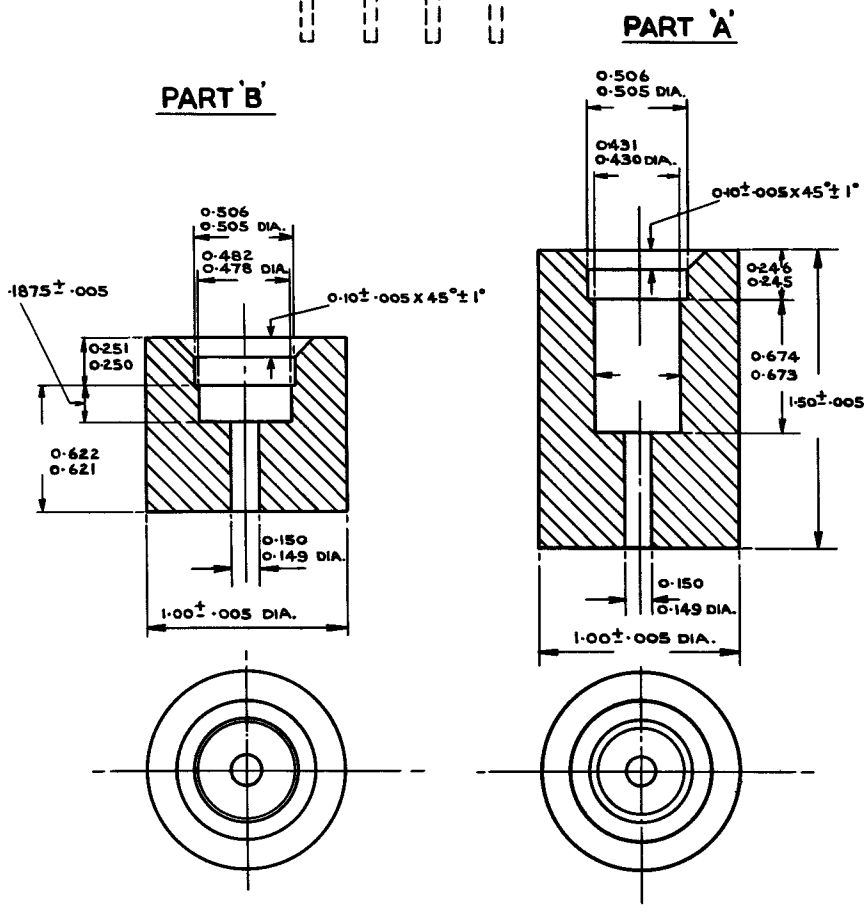

ALL DIMENSIONS ARE IN INCHES

SHOWING METHOD OF USING GAUGES.

CV2341

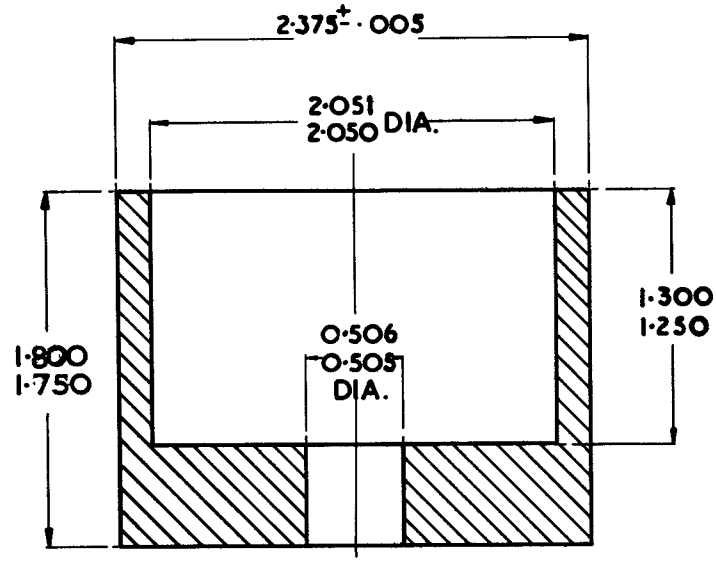

PART 'C'

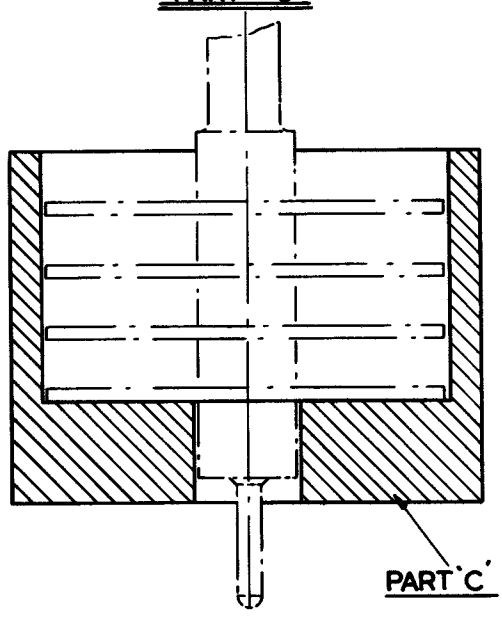

SHOWING METHOD
OF USING GAUGE.

ALL DIMENSIONS ARE IN INCHES

Clause	Test Conditions	Test	Limits Min.	Limits Max.	Te
g	See K1001/5A.3.2. (a) Vg -80V (b) Alternative method. Resistor 5MΩ	Grid Insulation (a) Leakage current (uA) (b) Increase in voltmeter reading	- -	16 100%	1
h		Deflection Sensitivities 1. x plates (mm/V) 2. y plates (mm/V)	850/Va3 900/Va3	1000/Va3 1100/Va3	(
j	See K1001/5A.11.1.	Deviation of spot from centre of screen (mm)	-	7.5	1
k		Orientation of Deflection Axes 1. Orientation of x axis of deflection relative to 00' on drawing 2. Angle between x and y axes of deflection	-2° 88°	+2° 92°	1 1
l	A screen area of at least 100 mm x 30 mm to be scanned.	Trapezoidal Distortions 1. Angle between adjacent sides. 2. Angle between opposite sides	87° 177°	93° 183°	1 (
m	With a defocussed raster scan to cover the useful screen (see test d.2), adjust Vg for any convenient light intensity. See Note 1.	Blemishes Bubbles and Dead Spots 0.25 to 0.6 mm. 0.6 to 1.0 mm. greater than 1.0 mm.		 10 5 0	1
n	Air Ministry Test Set 42 See K1001/11.5.	Vibration			
o	All conditions as in clause "e" but with the internal conductive coating + and - 10 volts with respect to a3	Line width (mm)		0.7	

MINISTRY OF SUPPLY R.R.E.

VALVE ELECTRONIC

CV2352

Specification MOS/CV2352 Issue 3 Dated:- February 1956. To be read in conjunction with K1001	SECURITY Specification: Unclassified Valve: Unclassified

← Indicates a change

TYPE OF VALVE:-	Cathode Ray Tube
TYPE OF DEFLECTION:-	Electrostatic Symmetrical or Asymmetrical
TYPE OF FOCUS:-	Electrostatic
BULB:-	Glass. Internally coated with conductive coating.
SCREEN:-	GG4
PROTOTYPE:-	VCRX 390

MARKING

See K1001/4

BASE

B14A.
See B.S.448: 1953

CONNECTIONS

Pin	Electrode
1	h
2	k
3	g
4	a2
5	No connection
6	Internal coating
7	y_1
8	y^2
9	a_3
10	x_2
11	x_1
12	No connection
13	a_1
14	h

RATING

Heater voltage	(V)	6.3
Heater current	(A)	0.3
Max. Va1	(kV)	2.5
Max. Va2	(kV)	1.1
Max. Va3	(kV)	6.0
Sensitivity, x plates	(mm/V)	$\frac{925}{Va3}$
Sensitivity, y plates	(mm/V)	$\frac{1000}{Va3}$

TYPICAL OPERATING CONDITIONS

Va1	(kV)	1.8
Va2	(kV)	0.65
Va3	(kV)	5.0

DIMENSIONS

See drawing, page 5

NOTES

A. For optimum focus quality the potential between the internal conductive coating and a3 must not exceed 10 volts. ←

To be performed in addition to those applicable in K1001

Clause	Test Conditions	Test	Limits Min.	Limits Max.	No. Tested
a	See K1001/5A.13	Capacitances (pF)			2%
		1. Each x plate to all other electrodes	-	20	(5)
		2. Each y plate to all other electrodes	-	16	
		3. Grid to all other electrodes	-	10	
		4. Each x plate to each y plate	-	1.5	
		5. Cathode to all other electrodes	-	10	
	FOR ALL TESTS GIVEN BELOW Vh = 6.3V				
b		Ih (A)	0.28	0.66	100%
c	Cathode 100 volts positive to heater	Heater-cathode current (uA)	-	100	100%
→	FOR ALL TESTS GIVEN BELOW Va1 = 1.8kV, Va3 = Vm = 5.0kV WITH ASYMMETRICAL X AND Y DEFLECTION VOLTAGES				
d	With a raster scan of convenient size adjust Va2 for optimum overall focus and Vg for a light intensity of 0.06 candela measured through a Wratten 61N colour filter.	1. -Vg (V)	1	-	100%
		2. Useful screen area.			100%
		X direction (mm)	125	-	
		Y direction (mm)	35	-	
		3. Ik (uA)		200	100%
→ e	With an elliptical scan nominally 100 mm x 30 mm adjust Va2 for optimum focus and Vg as in (d).	1. Line width (mm)		0.7	100%
		2. Va2 (V)	600	700	100%
f	Va2 as in (e) Adjust Vg for cut-off See K1001/5A.10.	1. -Vg (V)	25	70	100%
		2. Increase in negative value of Vg compared with value noted in test (d1) (V)	-	30	100%
		3. Within the range of Vg found in test f.1 to that in test d.1 the beam current shall increase continuously			100%

CV 2352

ALL DIMENSIONS IN MILLIMETRES.

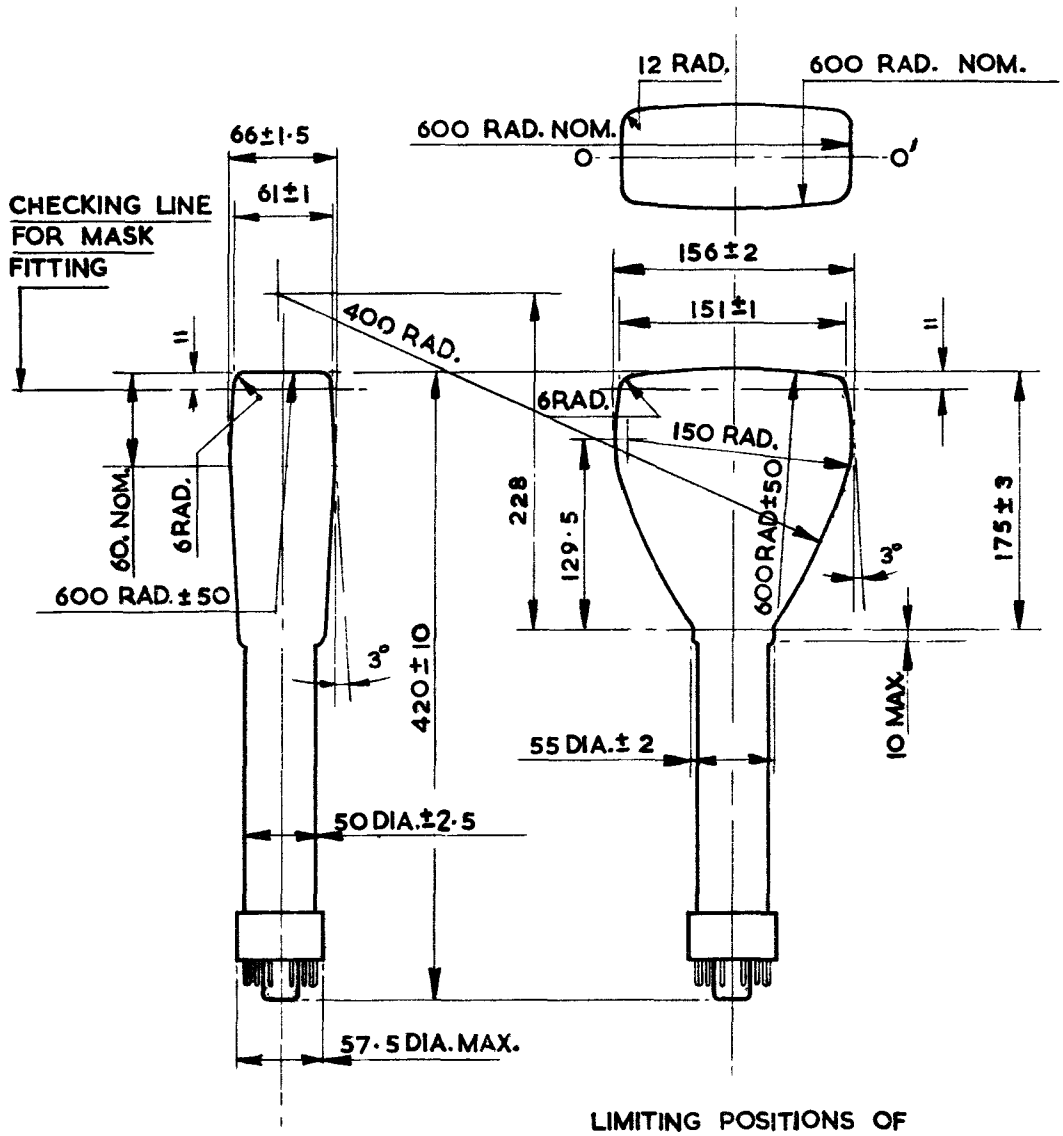

LOOKING AT THE SCREEN WITH THE OO' LINE HORIZONTAL AND PINS 9&10 OF THE BASE UPPERMOST A POSITIVE VOLTAGE APPLIED TO TERMINAL X1 SHALL DEFLECT THE SPOT TO THE LEFT & A POSITIVE VOLTAGE APPLIED TO TERMINAL Y1 SHALL DEFLECT THE SPOT UPWARDS.

LIMITING POSITIONS OF ORIENTATION OF OO' WITH RESPECT TO BASE.

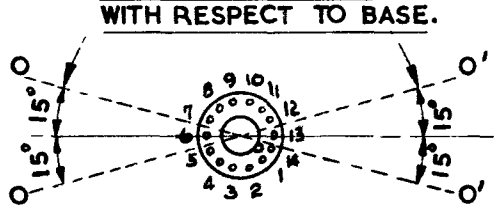

MINISTRY OF SUPPLY R.R.E.

VALVE ELECTRONIC **CV2388**

Specification MOS/CV2388 Issue 1 Dated June 1956. To be read in conjunction with K1001	SECURITY Specification: Unclassified Valve: Unclassified

← Indicates a change

TYPE OF VALVE:- Cathode Ray Tube

TYPE OF DEFLECTION:- Magnetic

TYPE OF FOCUS:- Magnetic

SCREEN:- 009 (Aluminium backed)

BULB:- Metal cone

PROTOTYPE:- VCRX397A

MARKING

See K1001/4

BASE

B12A with metal shell

CONNECTIONS

Pin	Electrode
1	h
2	g
3	No pin
4	No pin
5	No pin
6	No connection
7	No connection
8	No pin
9	No pin
10	a_1
11	k
12	h
Cone	a_2

RATING

			Note
Heater Voltage	(V)	6.3	
Heater Current	(A)	0.5	
Max. 1st Anode Voltage	(V)	600	A
Max. Final Anode Voltage	(kV)	15.5	A
Max. Heater-Cathode Voltage	(V)	150	A.B.
Max. Beam Current	(μA)	50	

CAPACITANCES (pf)

Max. C_g to all other electrodes	15	
Max. C_k to all other electrodes	8	

DIMENSIONS

See drawings on Pages 6, 7 and 8

A. Absolute maximum value.
B. Heater negative to cathode.
C. To prevent damage to the screen material the tube should not be operated with a stationary spot. The tube should be operated at its minimum useful brightness.
D. The fluoride screen shall not contain beryllium.

To be performed in addition to those applicable in K1001

Clause	Test Conditions	Test	Limits Min.	Limits Max.	No. Tested
a	See K1001/5A.13.	Capacitances (pf) 1. Grid to all other electrodes		15	5%(20)
		2. Cathode to all other electrodes		8	5%(20)
	FOR ALL TESTS BELOW V_h = 6.3 Volts				
b		Heater Current (A)	0.44	0.56	100%
	FOR ALL TESTS BELOW EXCEPT CLAUSES n & o V_a1 = 400V. V_a2 = 15 kV				
c	Adjust for optimum focus. Adjust Vg for cut-off. See K1001/5A.10.	Grid Base - V_g (V)	40	100	100%
d	Vg adjusted to give a light intensity of 0.45 candela, using a focussed raster of convenient size.	Screen Efficiency Beam Current (uA)		5	100%
e	Defocussed beam, scanned or deflected off usable screen area Adjust Vg to give Ib = 50 uA.	Grid Drive Change in Vg from value found in test (c).(V)	10	30	100%
f	Focus adjusted for optimum with focus coil centred as in drawing page 6. Linear line scan of velocity 4.9 mm/uS. See note 1. (i) Grid, +ve drive from cut-off by a 100 uS pulse	Line Width measured at the centre of the trace. (Microscope method) (i) (mm)		0.6	100%

TESTS (Cont'd)

CV2388

Clause	Test Conditions	Test	Limits Min.	Limits Max.	No. Tested
f	(Continued) of amplitude as found in test "e" at 100 P.P.S. OR (ii) Using an interlaced 405 line T.V. raster with the frame scan expanded to facilitate line width measurement, D.C. + ve grid drive from cut-off as found in test "e"	OR (ii) (mm)		0.5	100%
g	(i) Vg - 90V OR (ii) See K1001/5A.3.2. Resistor 10 megohm	Grid Insulation (i) Leakage current (uA) OR (ii) Increase in voltmeter reading		9 100%	100%
h	A voltage of 150V shall be applied between heater and cathode. See K1001/5A.3.3.	Heater-Cathode Leakage Leakage Current (uA)		150	100%
j	Adjust for optimum focus and any convenient light intensity, deflection to cover the useful screen area.	Useful Screen Area Diameter on the geometric centre of the screen (mm)	480		100%
k	No focus or deflecting fields. (1) Vg any convenient value.	(1) Deviation of the spot from the geometric centre of the screen (mm)		20	100%

Clause	Test Conditions	Test	Limits Min.	Limits Max.	No. Tested
k	(Continued) (2) Grid pulsed as in test f.4.	(2) Diameter of unfocussed spot (mm)		25	100%
l	Vg any convenient value. The unfocussed beam shall be scanned by deflection coils near the cathode plane to produce a raster on the tube face whose area is limited by the tube neck.	Neck Alignment Deviation of the centre of "shadow" area from the centre of the unfocussed spot as found in test k(1). (mm)		10	100%
m	Screen to be scanned with an interlaced 405 line T.V. raster of convenient size. No focussing field, Vg adjusted for a screen brightness of 2 foot lamberts. Excitation time 120 secs ± 15 sec.	Afterglow. Decay time to 0.014 foot lamberts at 20°C (Secs) Assume temperature coefficient of screen to be -6 secs. per °C within the limits 18 to 22°C	170		10% (10)
n	V_{a2} 18 kV V_{a1} 600V Vg -160V Preheat cathode at Vh 6.3V for 10 mins The tube to be held with the screen horizontal and uppermost. Viewed in a dark room or box.	Flash Over and Stray Emission Any flashover or stray emission can be ignored during the first 5 seconds when any emission should be deflected off the screen During the remaining 5 seconds, when there shall be no deflecting field the tube shall be rejected if flashover or stray emission appears.			100%

Phase	Test Conditions	Test	Limits Min.	Limits Max.	No. Tested
o	V_{a1} 200V, V_{a2} -70V, V_g 0. Starting with cathode cold, measure I_{a2} when I_k reaches 300 to 1000 uA.	Gas Ratio. The ratio $\frac{I_{a2}\ uA}{I_k\ uA}$		2×10^{-4}	100%
p	With a defocussed raster covering the useful screen area. Blemishes less than 0.25 mm to be ignored. See note 2.	Stones Bubbles and Blemishes. 0.75 mm dia. max.		24	100%
		1.0 mm. dia. max.		5	
		Spacing between bubbles(mm)	20		

NOTES

1. Focus coil dimensions $3\frac{1}{2}$" long with inside diameter of $2\frac{1}{4}$" with a full length gap.

2. If two or more blemishes are separated by a distance not greater than the maximum dimension of the largest blemish in the group, then the group of blemishes shall be considered as one blemish of dimension equal to the maximum overall dimension of the group.

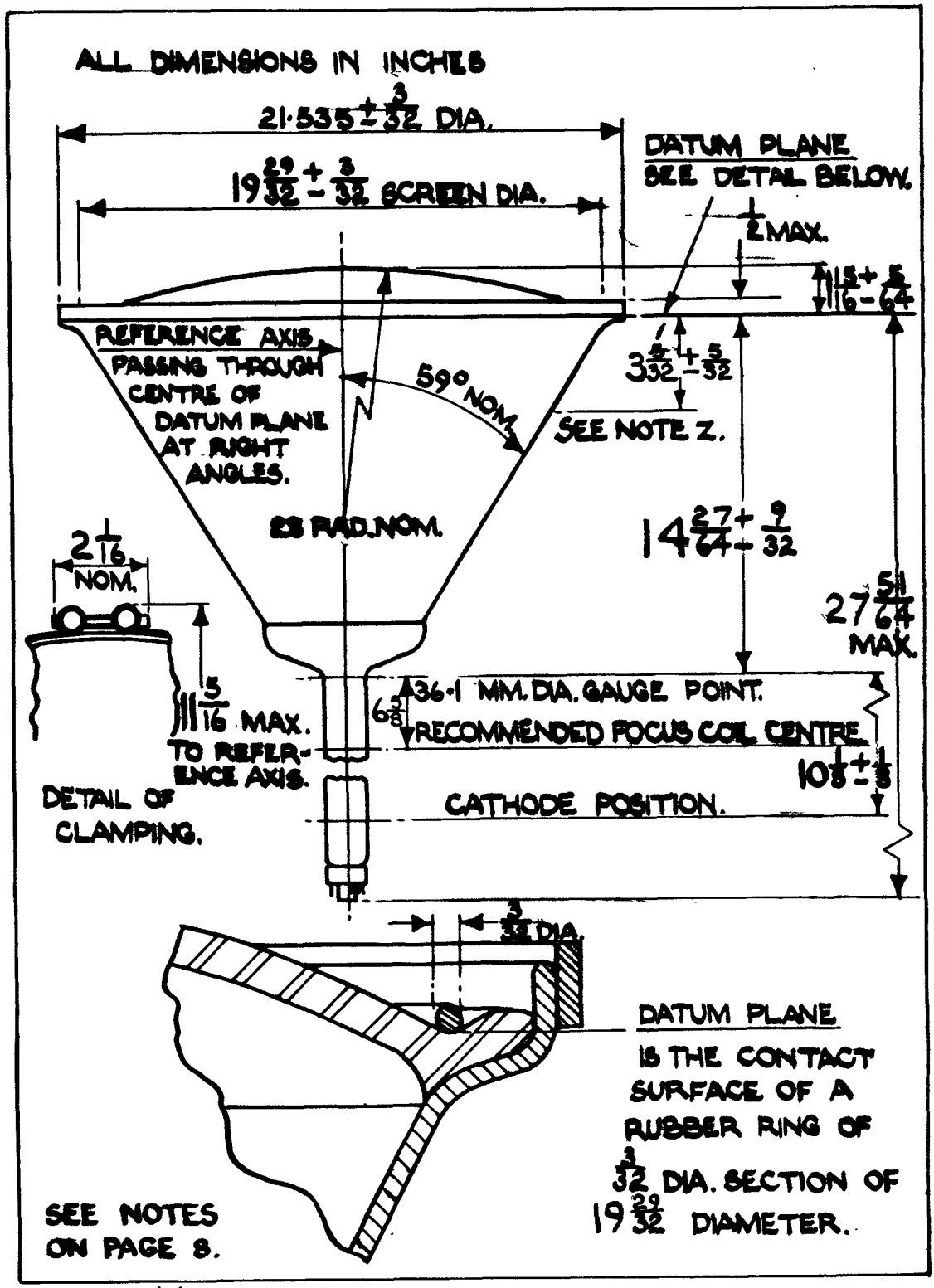

SEE NOTES ON PAGE 8.

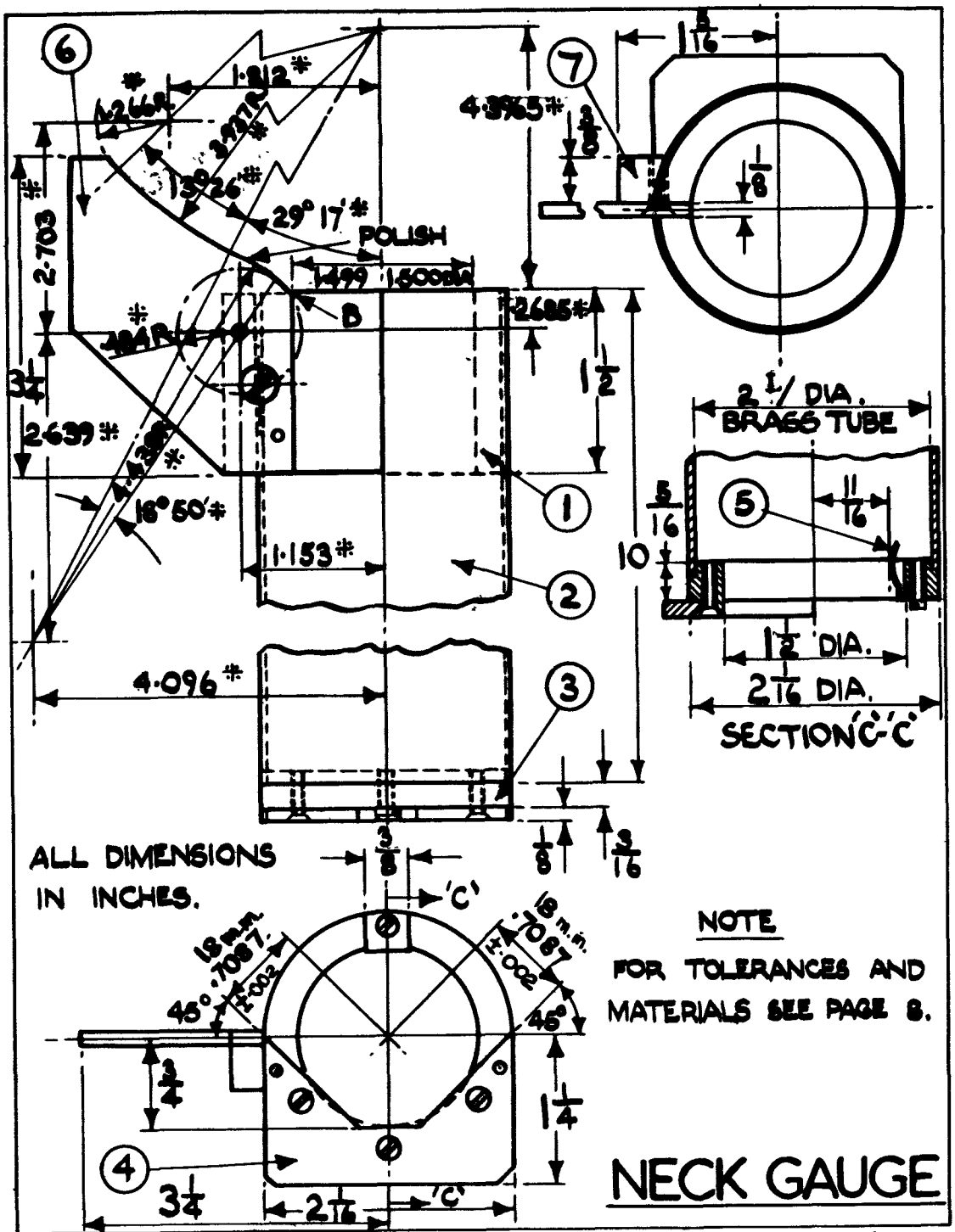

6
7
1·812*
1·266R
3·937R
13°26'*
29° 17'*
POLISH
1·499
1·500 DIA
B
2·703*
3¼
2·639*
4·438R
18°50'*
1·153*
4·096*
4·3965*
2·685*
1½
10
1 5/16
3/8
1/8
2 1/2 DIA.
BRASS TUBE
5/16
11/16
1½ DIA.
2 1/16 DIA.
SECTION 'C'-'C'
1
2
3
4
5
3/8
1/8
3/16
ALL DIMENSIONS
IN INCHES.
'C'
18 m.m.
.7087
±.002
45°
3/4
1¼
3¼
2 1/16
NOTE
FOR TOLERANCES AND
MATERIALS SEE PAGE 8.
NECK GAUGE

BULB OUTLINE NOTES

V. The flared neck contour must be checked with the gauge shown on Page 7. The blade of this gauge must only make contact with the flared neck at the point "B" when the gauge is rotated through 360° fully home on the neck of the tube.

W. A gauge 100 mm. long x 36.1 mm. dia. shall pass over base and neck and at the gauge point its centre axis shall lie within $\frac{1}{2}$" of the reference axis.

X. Between the 36.1 mm. gauge point and the cathode position the neck axis shall not depart from the reference axis by more than $\frac{1}{2}$°.

Y. 21.535" dia. does not include clamping point, this will be orientated to line up with the base spigot key ± 15°.

Z. At this point the cone shall not depart from a true circle of dia. $16\frac{21}{32}$" by more than 0.157" (4 mm) and the centre of this circle shall lie within 7/32" of the reference axis.

NECK GAUGE TOLERANCES

i. Fractional dimensions ± 1/64"

ii. Constructional dimensions marked ·1/· have no tolerance.

iii. Tolerance of +.003 -.000 on surface of and at right angles to profile.

iv. All other dimensions as stated.

NECK GAUGE MATERIALS

ITEM NO.	MATERIAL	SIZE	NO. REQUIRED
1	Brass	2" DIA. x $1\frac{5}{8}$" long	1
2	Brass tube	2" DIA. x $10\frac{1}{4}$" "	1
3	Brass	$2\frac{1}{4}$" DIA. x $\frac{1}{2}$" "	1
4	Gauge plate	$\frac{1}{8}$" x 3" x $1\frac{5}{8}$" "	1
5	Spring steel	26G (.018") x $\frac{3}{8}$" x $1\frac{1}{8}$" long	1
6	Gauge plate	$\frac{1}{8}$" x $\frac{3}{4}$" x $3\frac{3}{8}$" long	1
7	Brass	$\frac{3}{8}$" x $\frac{3}{8}$" x $1\frac{5}{8}$" long	1

ADMIRALTY SURFACE WEAPONS ESTABLISHMENT

VALVE ELECTRONIC

CV 2397

Specification AD/CV2397 Issue No. 2A dated 1st. October 1963. To be read in conjunction with K1001	SECURITY Specification: Unclassified Valve: Unclassified

→ Indicates a change

TYPE OF VALVE:- Disc Seal Triode CATHODE:- Indirectly Heated ENVELOPE:- Metal and Glass PROTOTYPE:- VX3263	MARKING See K1001/4 DIMENSIONS See drawing on page 3

RATINGS

(All limiting values are absolute)

		Note
Heater Voltage (V)	6.3	
Heater Current (A)	0.5	
Max. Pulse Anode Voltage (V)	1000	
Max. CW Anode Voltage (V)	400	
Max. Mean Anode Dissipation (W)	10	A
Max. Mean Anode Current (mA)	40	
Amplification Factor	65	B
Mutual Conductance	(See Page 5)	

CAPACITANCES (pF)

$C_{a,g}$	1.2	C
$C_{a,k}$	0.03	C
$C_{g,k}$	3.6	C
$e_{g,k}$ (hot)	4.4	B

TYPICAL PERFORMANCE

OSCILLATOR		Note
Peak Power Output at 5200 Mc/s (mW)	250 (50 mW Min.)	D
CW Power Output at 4000 Mc/s (W)	1.5 to 2.0	E
CW Power Output at 2300 Mc/s (W)	3.0 to 3.5	E
Amplifier with less than 10 mW drive		
Gain at 4000 Mc/s (dB)	11 to 14	E, F
Noise Factor at 4000 Mc/s (dB)	16 to 18	E
Gain at 2300 Mc/s (dB)	13 to 15	E, F
Noise Factor at 2300 Mc/s (dB)	11 to 13	E
Amplifier with 1 to 2W drive		
Output at 4000 Mc/s (W)	1 to 1.5	E, F
Output at 2300 Mc/s (W)	3 to 3.5	E, F

NOTES

A. The electrodes must be cooled by conduction and the temperature of any glass to metal seal must not exceed 140°C.

B. With Va = 200V; Ia = 10 mA.

C. Measured with the valve cold.

D. Operating in the circuit and with the modulator incorporated in Admiralty Test Set A.P.63369, Design 19.

E. The d.c. input is 250V, 40 mA.

F. Measured at 50 Mc/s bandwidth.

CV2397

TESTS

To be performed in addition to those applicable in K1001 and after a holding period of 28 days.

	Test Conditions				Test	Limits		No. Tested	Note
	Vh (V)	Va (V)	Vg (V)	Ia (mA)		Min.	Max.		
a	Measurements shall be made at a frequency of 1.0 Mc/s.				Capacitance (pF)			AQL 6.5 Inspection Level 1	1
					$^{e}a,g$	1.0	1.4		
					$^{e}a,k$	-	0.03		
					$^{c}g,k$	3.1	4.1		
b	6.3	0	0	0	Ih (A)	0.48	0.53	100%	
c	6.3	200	Adjust	10	Reverse Ig (/uA)	-	0.5	100%	
d	6.3	Adjust	-0.4	15	gm (mA/V)	12.0	-	100%	2
e	6.3	200	Adjust	1.0	Negative Vg (V)	-	7.0	100%	
f	6.3	200	Adjust	10	Negative Vg (V)	0.5	3.5	100%	
g	6.3 - - - The valve shall be tested in the circuit and with the modulater used in Admiralty Test Set A.P.63369, Design 19. Adjust for maximum output.				Peak Power Output (mW)	50.0	-	T.A.	
h	As in test (g)				Frequency (Mc/s)	5050	5350	T.A.	
j	As in test (g)				Life (hrs.)	500	-	T.A.	3

NOTES

1. Measured with the valve cold.
2. Measured in a bridge at a frequency of 1 Mc/s nominal, and with special capacitance jig, drawings for which may be obtained from the Specification Authorities.
3. The valve shall be deemed to have reached the end of life when one or both of the following conditions apply:-
   (1) The peak power output as measured in test (g) is less than 40 mW.
   (2) The frequency as measured in test (h) lies outside the range 5040 - 5360 Mc/s.

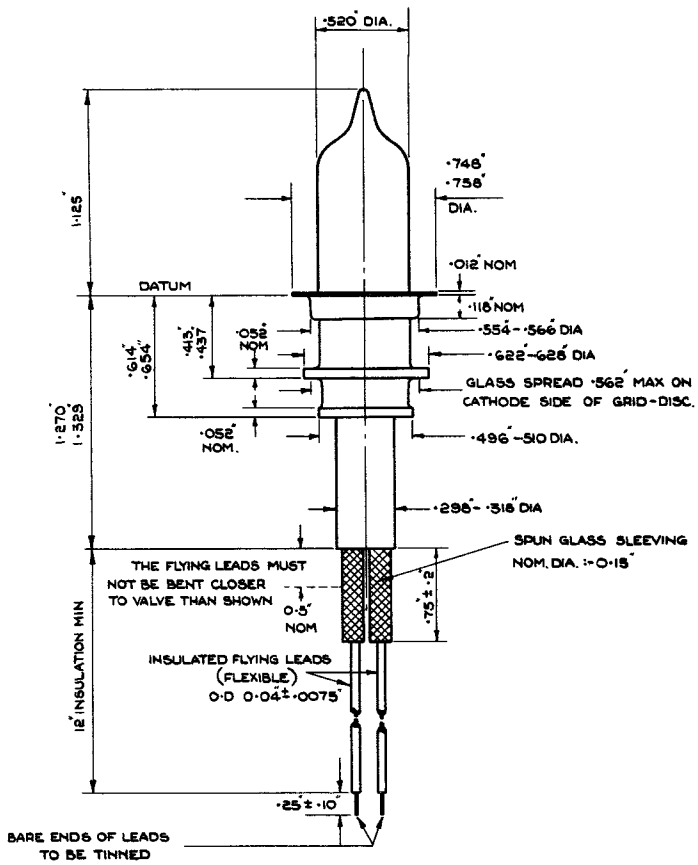

OUTLINE DRAWING

CV 2397/2A/3.

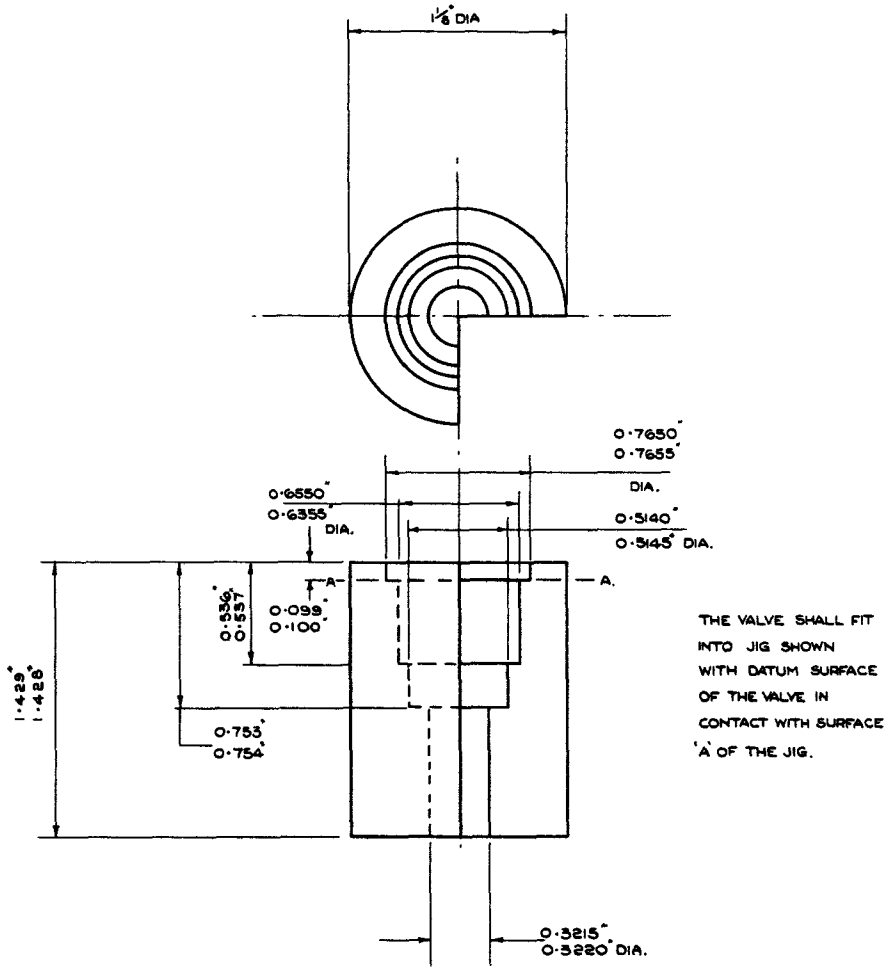

CV 2397/2A/4 OVERALL CHECKING GAUGE

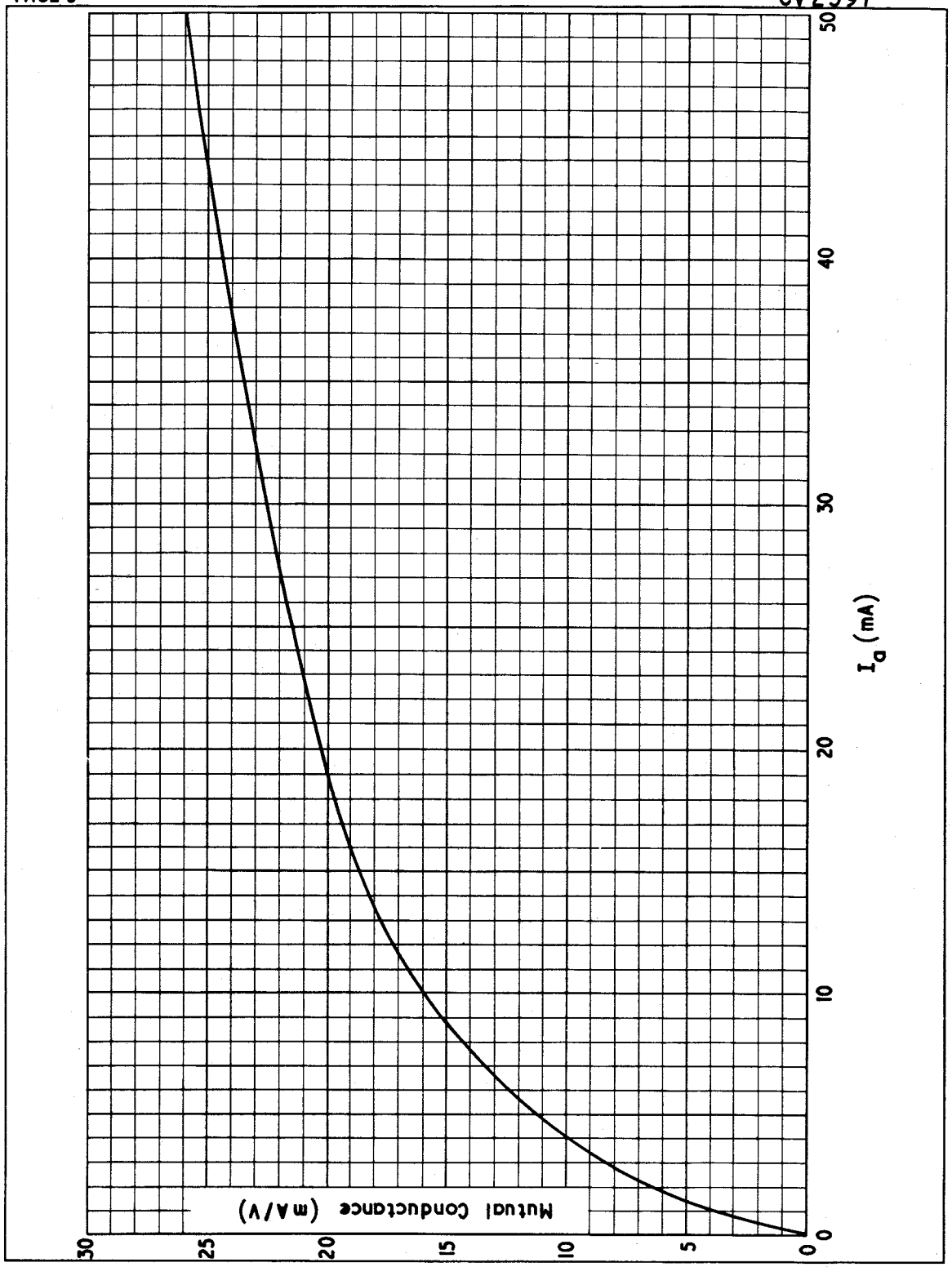

MUTUAL CONDUCTANCE

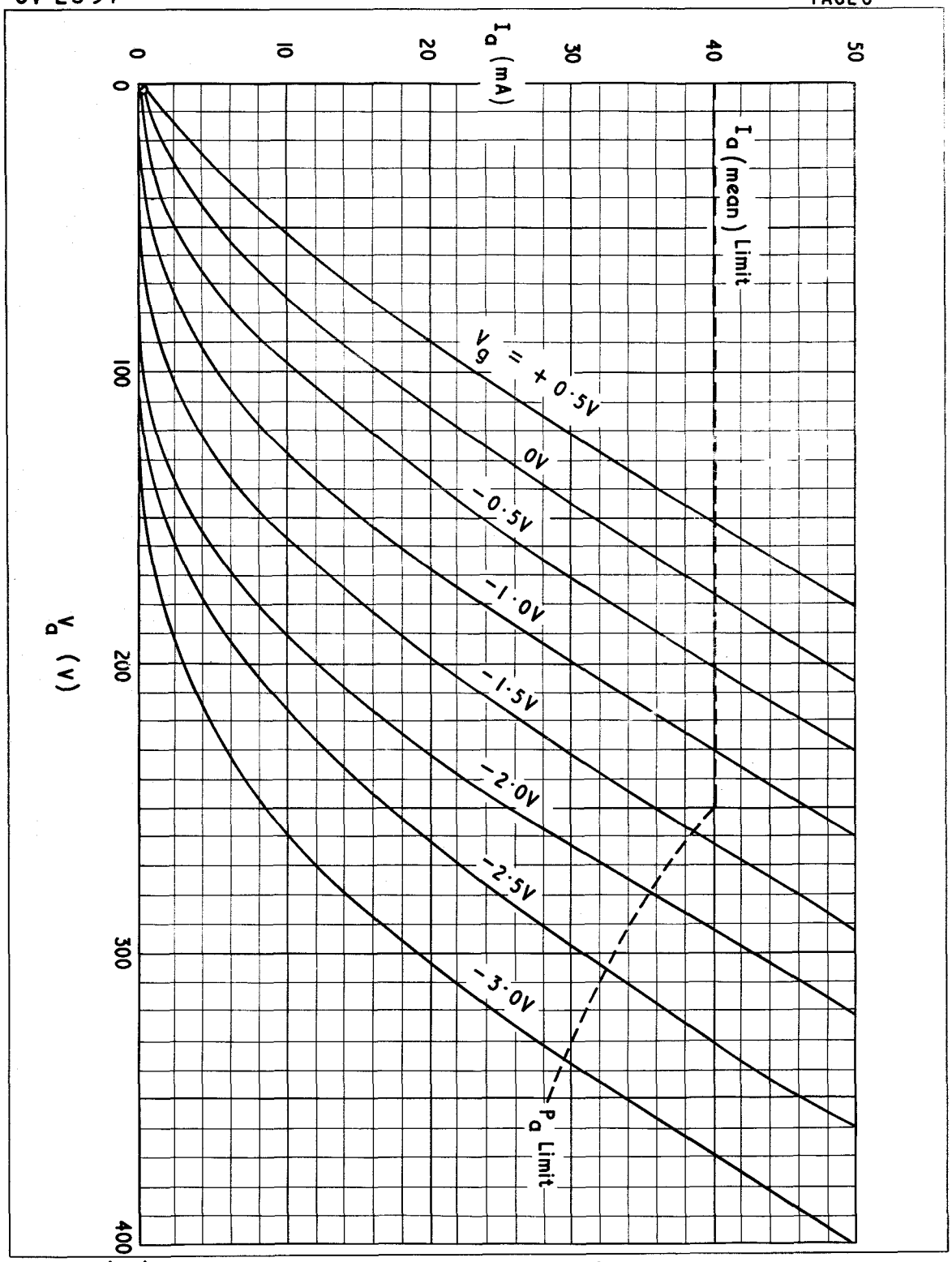

ANODE CHARACTERISTICS

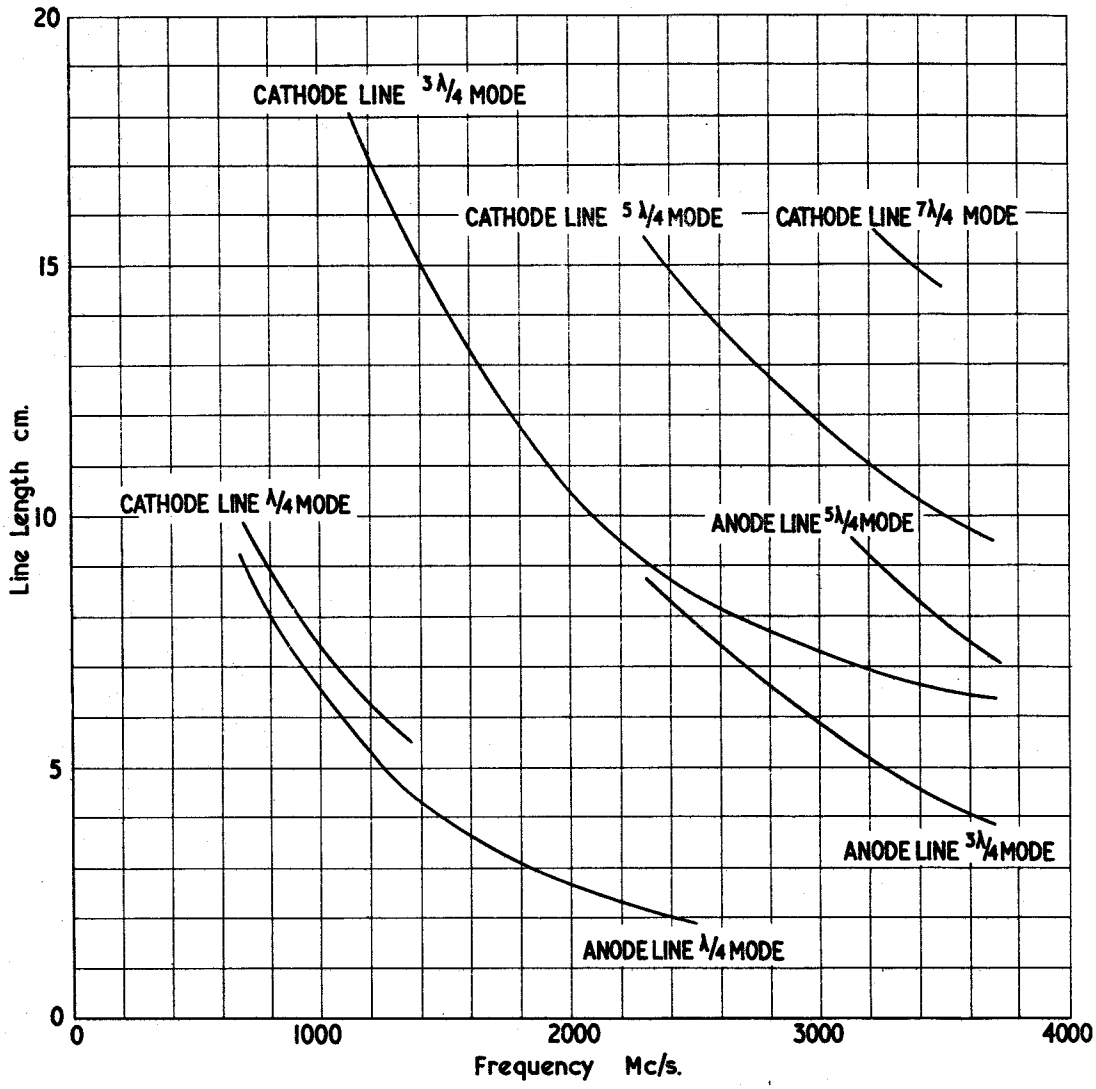

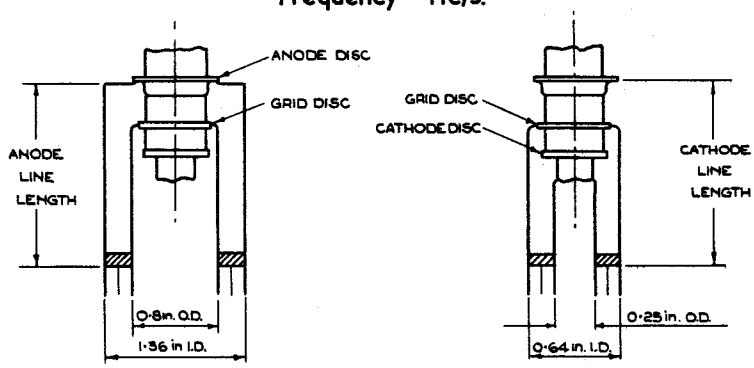

LINE LENGTH CURVES FOR TUNABLE SELF-OSCILLATOR CV 2397/2A/7

ADMIRALTY SIGNAL AND RADAR ESTABLISHMENT

VALVE ELECTRONIC

CV2431.

Specification AD/CV 2431 Issue No. 1 dated 17. 10. 57. To be read in conjunction with K1006 and B.S.448.	SECURITY Specification Unclassified	Valve Unclassified

TYPE OF VALVE: Cathode Ray Tube

TYPE OF DEFLECTION: Electrostatic, symmetrical.

TYPE OF FOCUS: Electrostatic.

BULB: Glass, internally coated with conductive coating.

SCREEN DIAMETER: 2¾ inches (approx.)

SCREEN: See Note A

PROTOTYPE: DG7 - 32

MARKING

See K1001/4

BASE

See B.S.448/B12A

RATINGS

(All limiting values are absolute)

Heater Voltage	(V)	6.3
Heater Current	(A)	0.3
Max. Final Anode (a3) voltage.	(V)	800
Min. Final Anode (a3) voltage.	(V)	400
Max. Second Anode (a2) voltage.	(V)	200
Max. First Anode (a1) voltage.	(V)	800
Max. Negative Grid Voltage.	(V)	160
Max. Grid Resistance.	(MΩ)	0.5
Min. x-plates sensitivity	(mm/V)	110/Va3
Min. y-plates sensitivity	(mm/V)	175/Va3
Max. Peak Voltage between x-plates	(V)	750
Max. Peak Voltage between y-plates	(V)	450
Max. Resistance between deflecting plates.	(MΩ)	5
Max. Screen Dissipation	mW/cm²	3

CONNECTIONS

Pin	Electrode
1	h
2	g
3	k
4	a2
5	NC
6	D3 (y^1 plate)
7	D4 (y^2 plate)
8	a1, a3 and conductive coatings.
9	D1 (x1 plate)
10	D2 (x2 plate)
11	NC
12	h

DIMENSIONS

See drawing on page 4.

TYPICAL WORKING CONDITIONS

Third and First Anode Voltage	(V)	500
Second Anode Voltage	(V)	0 to 120
Negative Grid Voltage	(V)	50 to 100
Beam Current	(μA)	0 to 50

MOUNTING POSITION

Any

NOTES

A. The screen gives a green fluorescence and a green afterglow of medium persistence, between 10 and 100 milliseconds. A transparent conductive coating, which is connected to a3, is present between the glass and the phosphor. This makes possible application of the tube with a3 at high potential with respect to earth without the raster being distorted if the faceplate is touched.

B. When the tube is viewed from the screen end, and is positioned so that pin 9 is uppermost, a positive voltage on D1 (pin 9) will deflect the spot to the right and a positive voltage on D4 (pin 7) will deflect the spot upwards.

C. In no circumstances shall the grid be allowed to become positive with respect to the cathode.

CATHODE RAY TUBE, ELECTROSTATIC FOCUS AND DEFLECTION
DG7 - 32

Ratings;	Ef V	Ec1 Vdc	Eb1 Vdc	Eb2 Vdc	Eb3 Vdc	Rg Meg
Absolute Maximum:	6.3 ± 10%	0	800	200	800	0.5
Minimum:	-	-160	400	-	400	
Test Conditions:	6.3	Adjust	500	Focus	500	

Fluorescent Colour: Green (See Note A) Persistence: See Note A

For miscellaneous requirements see paragraph 3.3 Inspection Instructions for Electron Tubes.

- - - - - -

Ref;	Test	Conditions		Min.	Max.
3.1.	Qualification Approval.	Required for JAN. Marking			
4.9.2.1.	Dimensions.	Per Drawing			
4.5	Holding Period.	t = 28 days			
4.9.18.1.2.	Carton Drop.				
4.6.1.	Preheating.				
4.10.8.	Heater Current.		If:	270	330 mA d.c.
4.12.3.1.	Alignment, Base.	1D2; Pin No. 6			
4.12.3.7.	Angle between traces.			88.5	91.5 Degrees
4.12.9.	Grid cut-off Voltage.		Ec1:	-100	-50 Vdc
4.12.13.	Grid Insulation.	Ec1 = -50 Vdc	Ic1:	-	10 uA d.c.
4.12.13.1.	Heater-Cathode Leakage.				
.....	Light Output and Focussing Voltage.	See Note 1	Ec1:	-	-1 Vdc
			Eb2	0	120 Vdc
.....	xLine Width.	Beam Current = 0.5 uA dc	Width:	-	0.7 mm
		Beam Current = 10 uA dc See Note 2	Width:	-	1.1 mm
4.12.11.	xDeflection Factor.	1D2	DF:	84	104 Vdc/In
4.12.11.	xDeflection Factor.	3D4	DF:	59	73 Vdc/In
4.12.7.2.	Spot Position.	See Note 3		-	7.0 mm
.....	Useful Scan Area.		Dia:	61	- mm
.....	Trapezoidal Distortion.	Angle 1 (See Note 4)		87.5	92.5 Degrees
		Angle 2 (See Note 4)		175	185 Degrees
4.10.14	xxCapacitances:	D1 to all except D2	C:	-	5 pF
		D2 to all except D1	C:	-	5 pF
		D3 to all except D4	C:	-	5 pF
		D4 to all except D3	C:	-	5 pF
		(D1 and D2) to (D3 and D4)	C:	-	1.5 pF
		Grid to Cathode	C:	-	10 pF
4.9.11.	xxPressure.	45 lbs/sq.in. absolute		-	-

/Notes .....

Note 1 Adjust Ec1 to give a light output of 0.007 candela from a focused raster of area about 40 mm by 40 mm. It is required that Ec1 shall not be more positive than -1 volt and that the focusing value of Eb2 shall be within the specified limits.

Note 2 The beam current is the current recorded by a microammeter in series with the deflector plate D1 when this plate is 450 volts positive with respect to the other three deflector plates and these are connected to A3. The trace on the screen shall be a circle 50 mm in diameter, and the trace frequency shall be 50 traces per second. It is required that the width of the trace shall nowhere exceed the specified limits when Ib3 has the specified values.

Note 3 The test conditions shall be as in 4.12.7.2. except that the deflecting electrodes shall be connected to the third anode A3 and not to the second anode as specified in 4.12.7.2.

Note 4 Using a raster size of at least 40 mm x 40 mm.
Angle 1 is the angle between adjacent sides.
Angle 2 is the angle between opposite sides.

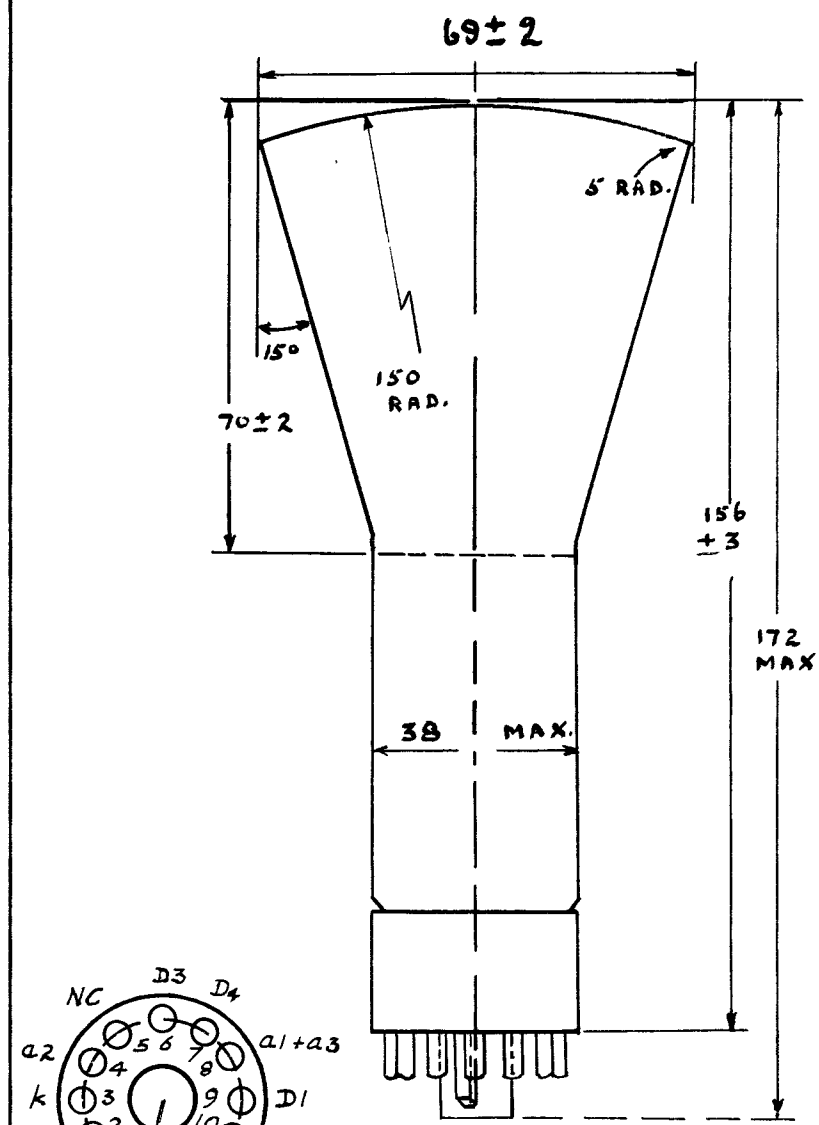

ALL DIMENSIONS ARE IN M.M.

MINISTRY OF SUPPLY D.L.R.D./R.A.E.

CV2456,57,58,59, CV2460,61,62

Specification MOS/CV.2456, CV.2457, CV.2458, CV.2459, CV.2460, CV.2461, CV.2462.

Issue No. 1 Dated 1.4.58

To be read in conjunction with K.1001, BS.448 and BS.1409

SECURITY	
SPECIFICATION	VALVE
Unclassified	Unclassified

TYPE OF VALVE: Corona Stabiliser Valves.

CATHODE: Cold

ENVELOPE: Glass.

PROTOTYPE: SC1/350, SC1/400, SC1/600, SC1/800, SC1/1000, SC1/1200, SC1/1400.

MARKING

See K.1001/4.

BASE

BS.448/B7G.

RATINGS
(All limiting values are absolute)

Normal Operating Current	(μA)	250
Average Incremental Resistance	(KΩ)	50
Temperature Stability	(% per °C)	0.01
CV.2456		
Operating Voltage	(V)	350
Max. Stable Current	(μA)	300
Min. Stable Current	(μA)	5
CV.2457		
Operating Voltage	(V)	400
Max. Stable Current	(μA)	300
Min. Stable Current	(μA)	5
CV.2458		
Operating Voltage	(V)	600
Max. Stable Current	(μA)	300
Min. Stable Current	(μA)	10
CV.2459		
Operating Voltage	(V)	800
Max. Stable Current	(μA)	400
Min. Stable Current	(μA)	15
CV.2460		
Operating Voltage	(V)	1000
Max. Stable Current	(μA)	400
Min. Stable Current	(μA)	20
CV.2461		
Operating Voltage	(V)	1200
Max. Stable Current	(μA)	500
Min. Stable Current	(μA)	20
CV.2462		
Operating Voltage	(V)	1400
Max. Stable Current	(μA)	500
Min. Stable Current	(μA)	20

CONNECTIONS

PIN	ELECTRODE	
1	No connection	NC
2	No connection	NC
3	No connection	NC
4	No connection	NC
5	No connection	NC
6	No connection	NC
7	Cathode	k
Top Cap	Anode	a

DIMENSIONS

BS.448/B7G/2.2 Size Ref. No.4

DIMENSIONS (mm)	MIN.	MAX.
"A" Seated Height	~~55.5~~ 57.2	~~65~~ 66.7
"C" Diameter	16	19
"D" Overall Length	-	~~72.5~~ 73.8

TOP CAP

BS.448/CT1.

TESTS

To be performed in addition to K.1001.

All tests are to be performed in the specified order with the valves mounted in total darkness and except where otherwise stated in an ambient temperature of 25° ± 5°C.

The tests specified in clauses "b" to "g" inclusive are to be performed at least 28 days after Test "a".

	Test Conditions	Test	Limits Min.	Limits Max.	No. Tested	Notes
a	Adjust Ia = 250μA.	Operating Voltage				
		CV.2456 (V)	335	365		
		CV.2457 (V)	380	420		
		CV.2458 (V)	580	620	100%	1&2
		CV.2459 (V)	780	820		
		CV.2460 (V)	975	1025		
		CV.2461 (V)	1170	1230		
		CV.2462 (V)	1365	1435		
b	Adjust Ia = 250μA.	Operating Voltage				
		CV.2456 (V)	335	365		
		CV.2457 (V)	380	420		1,
		CV.2458 (V)	580	620	100%	2 & 3
		CV.2459 (V)	780	820		
		CV.2460 (V)	975	1025		
		CV.2461 (V)	1170	1230		
		CV.2462 (V)	1365	1435		
c	Adjust Ia:-	Current Stability				
	CV.2456 = 300μA	Meter Fluctuations (μA)	-	5	100%	4
	CV.2457 = 300μA					
	CV.2458 = 300μA					
	CV.2459 = 400μA					
	CV.2460 = 400μA					
	CV.2461 = 500μA					
	CV.2462 = 500μA					
d	Adjust Ia:-	Current Stability				
	CV.2456 = 5μA	Meter Fluctuations (μA)	-	5	100%	4
	CV.2457 = 5μA					
	CV.2458 = 10μA					
	CV.2459 = 15μA					
	CV.2460 = 20μA					
	CV.2461 = 20μA					
	CV.2462 = 20μA					

CV 2456, 57, 58, 59,
CV 2460, 61, 62

	Test Conditions	Test	Limits Min.	Limits Max.	No. Tested	Notes
e	Adjust Ia = 225μA	Regulation (1) (1) Test as in Test 'b' above but with test conditions modified as in Test Condition column at left. (2) Change in operating voltage between values found in Test 'b' and Test 'e(1)':-			100%	2 & 5
		CV.2456 (V)	-	1.0		
		CV.2457 (V)	-	1.0		
		CV.2458 (V)	-	1.5		
		CV.2459 (V)	-	2.0		
		CV.2460 (V)	-	2.5		
		CV.2461 (V)	-	3.0		
		CV.2462 (V)	-	3.5		
f	Adjust Ia = 275μA	Regulation (2) (1) Test as in Test 'b' above but with test conditions modified as in Test Condition column at left. (2) Change in operating voltage between values found in Test 'b' and Test 'f(1)':-			100%	2 & 5
		CV.2456 (V)	-	1.0		
		CV.2457 (V)	-	1.0		
		CV.2458 (V)	-	1.5		
		CV.2459 (V)	-	2.0		
		CV.2460 (V)	-	2.5		
		CV.2461 (V)	-	3.0		
		CV.2462 (V)	-	3.5		
g	The valve to be run for a minimum period of 7 hours with Ia = 250μA	Stability Test (1) Test as in Test 'b' above but with test conditions modified as in Test Condition column at left. (2) Change in operating voltage between values found in Test 'b' and Test 'g(1)':-			100%	2 & 6
		CV.2456 (V)	-	2.0		
		CV.2457 (V)	-	2.0		
		CV.2458 (V)	-	2.0		
		CV.2459 (V)	-	2.0		
		CV.2460 (V)	-	2.5		
		CV.2461 (V)	-	3.0		
		CV.2462 (V)	-	3.5		

	Test Conditions	Test	Limits Min.	Limits Max.	No. Tested	Notes
h	Adjust Ia = 250μA. Ambient Temperature = -20°C.	Temperature Stability (1) Test as in Test 'b' but with Test Conditions modified as in Test Condition column at left.			T.A.	2 & 5
	Ambient Temperature = +70°C.	(2) Test as in Test 'b' but with Test Conditions modified as in Test Condition column at left.				
		(3) Change in operating voltage between values obtained in Test 'h(1)' and Test 'h(2)':				
		CV.2456 (V)	-	17.5		
		CV.2457 (V)	-	4.0		
		CV.2458 (V)	-	6.0		
		CV.2459 (V)	-	8.0		
		CV.2460 (V)	-	10.0		
		CV.2461 (V)	-	12.0		
		CV.2462 (V)	-	21.0		

NOTES

1. The valves shall have been in the ageing rack immediately prior to Test 'b'. They shall be quickly transferred to the test position. Time taken to strike shall be less than 0.5 secs.

2. The values of operating voltage are to be recorded.

3. An increase in voltage between the value obtained in Test 'b' and that recorded in Test 'a' within the following limits is permissible:-

Valve Type	Allowable increase in Test 'b' from Test 'a'
CV.2456, CV.2457	10 volts.
CV.2458, CV.2459, CV.2460, CV.2461, CV.2462.	5 volts.

Should the value of operating voltage recorded in Test 'b' be higher than that specified above, the valves are to be held for a further minimum period of 28 days when if the upward drift is still evident the valve shall be rejected.

4. To be performed in an approved circuit.

5. Tests to be completed within 30 secs.

6. On completion of Test 'f' the valves shall be run for the seven hour stability test. The conditions of Note 1 shall apply.

MINISTRY OF SUPPLY, D.L.R.D./R.A.E.

VALVE ELECTRONIC

C.V.2466

SPECIFICATION M.O.S. CV.2466
ISSUE 1 DATED 15.6.59
To be read in conjunction with BS.448, BS.1409 and K1001

SECURITY

SPECIFICATION	VALVE
Unclassified	Unclassified

TYPE OF VALVE: R.F. Power Double Tetrode.
CATHODE: Indirectly Heated.
ENVELOPE: Glass, unmetallised.
PROTOTYPE: QQV02-6.

RATINGS
(All limiting values are absolute)

			NOTES
Heater Voltage (series)	(V)	12.6	
Heater Current (series)	(A)	0.3	
Heater Voltage (parallel)	(V)	6.3	
Heater Current (parallel)	(A)	0.6	
Max. Anode Voltage	(V)	250	
Max. Screen Voltage	(V)	200	
Max. Anode Dissipation	(W)	3.0	B,C
Max. Screen Dissipation	(W)	4.5	C
Max. Grid Dissipation	(W)	0.12	C
Max. Negative Grid Voltage	(V)	100	C
Max. Cathode Current	(mA)	50	C
Max. Peak Cathode Current	(mA)	160	C
Max. Intermittent Peak Cathode Current with A.M.	(mA)	260	C
Max. Heater Cathode Voltage	(V)	100	
Max. Operating Frequency	(Mc/s)	500	
Max. Bulb Temperature	(°C)	225	
Max. Pin Seal Temperature	(°C)	120	

CAPACITANCES (Note D)

C in (nom.)	(pF)	3.8	E
C out (nom.)	(pF)	0.95	E
Ca'-a" (max.)	(pF)	0.2	
Cg1'-Cg1" (nom.)	(pF)	0.45	

MARKING
See K1001/4

BASE
BS.448/B9A

CONNECTIONS

PIN	ELECTRODE	
1	Control grid (1)	g1'
2	Cathode + Shield	k + s
3	Control grid (2)	g1"
4	Heater	h
5	Heater	h
6	Anode (1)	a'
7	Screen Grid (Common)	g2
8	Anode (2)	a"
9	Heater C.T.	h(c.tap)

DIMENSIONS
BS.448/B9A/2.1 Size Ref. No.3.

DIMENSIONS (mm)		MIN.	MAX.
A	Seated height	-	60.5
B	Diameter	14.0	22.2
C	Overall length	-	67.5

MOUNTING POSITION
Any.

NOTES

A. The valve is internally neutralized for push-pull operation. The neutralizing is optimized for the frequency range 300 to 500 Mc/s. Should the valve be required to operate at lower frequencies it may be found necessary to apply additional external neutralizing.

B. Cooling is by radiation and convection.

C. Each section.

D. Measured without external screen.

E. Sections operated in push-pull.

To be performed in addition to those applicable in K.1001

TEST CONDITIONS: Unless otherwise stated.

Vh (V)	Va (V)	Vg2 (V)	Vg1 (V)	
6.3	150	150	-3	Note 3

K.1001 REF.	TEST	TEST CONDITIONS	INSP. LEVEL	AQL %	SYMBOL	LIMITS MIN.	LIMITS MAX.	UNITS
	GROUP A							
	Heater Current	Note 1.	100%	-	Ih	0.54	0.66	A
5.3	Heater-Cathode Leakage Current	Vhk = ± 100V.	100%	-	Ihk	-	45	µA (AQL)
	Reverse Grid Current	Adj. Vg1 for Ia = 25mA. Notes 2 and 3.	100%	-	-Ig1	-	1.0	µA
	Anode Current (1)	Note 4.	100%	-	Ia	6	34	mA
	Screen Current	Note 4.	100%	-	Ig2	1.4	7.6	mA
	Anode Current (2)	Vg1 = -11V. Note 4.	100%	-	Ia tail	-	150	µA
	GROUP B							
A.III	Capacitances	Measured on a 1 Mc/s bridge with valve mounted in a fully shielded holder. Valve unscreened. Notes 3 and 6.	IC	6.5	Ca' a"	-	0.05	pF
					Cg1' g1"	0.3	0.6	pF
					Cout	1.5	1.9	pF
					Cin	5.0	7.8	pF
	Dynamic Operation at 500 Mc/s.	Vht = 180V. Vg1 = -25V each section. Ia = 55 mA. Note 5.	I	6.5	Pout	4.5	-	Watts
					Ig2 total	8.0	20.0	mA
					Ig1 total	-	4.0	mA

NOTES

1. Parallel heater connections.
2. To be read after at least three minutes operation.
3. Each section.
4. Test each section separately, the other section being biased to -50 volts.
5. A typical circuit diagram is shown on page 3.
6. Pin connections:

TEST	HP	LP	E
Ca'a"	6	8	1,2,3,4,5,7,9,C.
Cg1'g"	1	3	2,4,5,6,7,8,9,C.
Cout	6	2,4,5,7,9,C.	8,1,3.
	8	2,4,5,7,9,C.	6,1,3.
Cin	1	2,4,5,7,9,C.	3,6,8.
	3	2,4,5,7,9,C.	1,6,8.

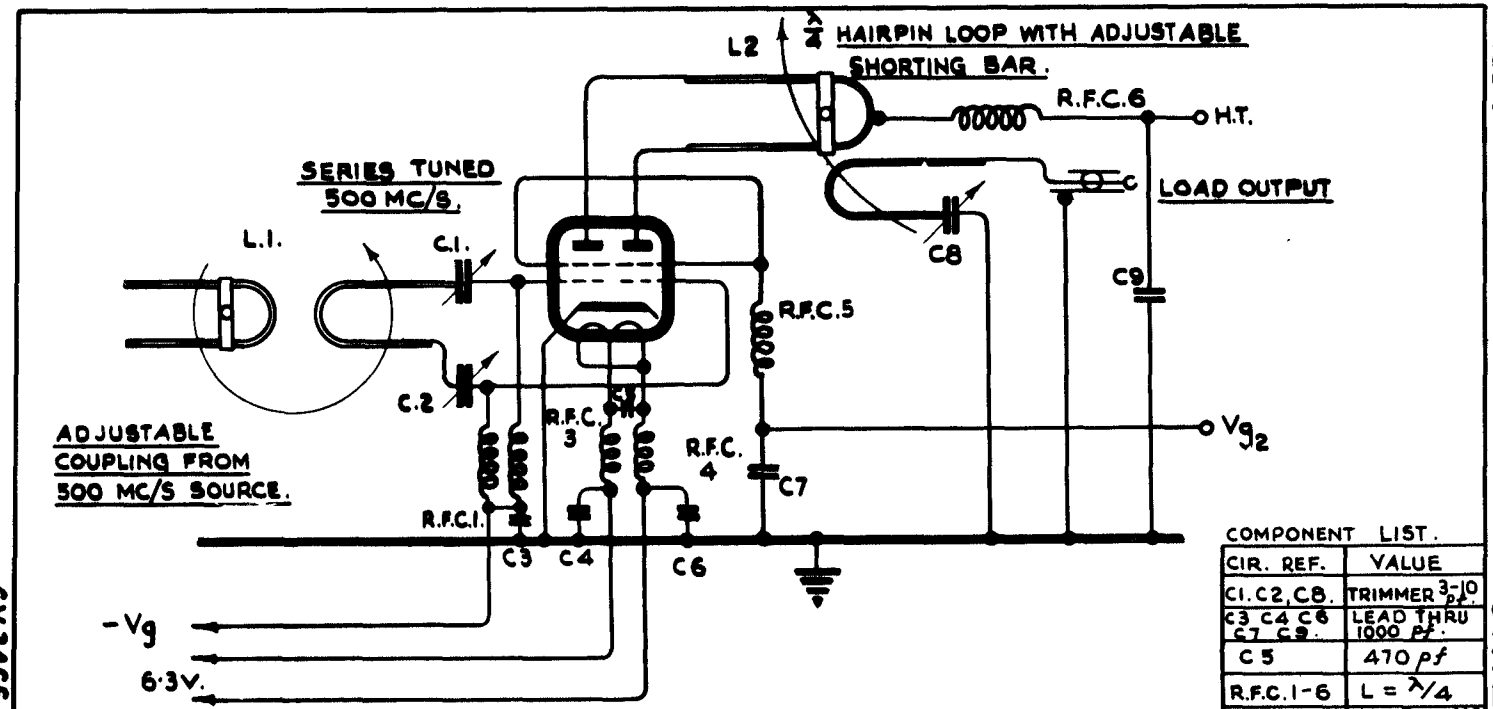

COMPONENT LIST.

CIR. REF.	VALUE
C1. C2, C8.	TRIMMER 3-10 pf.
C3 C4 C6 C7 C9.	LEAD THRU 1000 pf.
C 5	470 pf
R.F.C. 1-6	L = λ/4
L.1.	HAIRPIN LOOP WITH ADJ. SHORTING BAR.
L.2.	λ/4 HAIRPIN LOOP WITH ADJ. SHORTING BAR.

TYPICAL - 500 MC/S R F AMPLIFIER OUTPUT STAGE.

C.V.2466/1/3

C.V.2466

VALVE ELECTRONIC

CV 2473

Specification MOA/CV2473 Issue No. 1, reprint A, dated 17.3.61 To be read in conjunction with K1006 and with MIL-E-1/979C dated 18th June, 1957. See Note D.D.	Security Specification: Unclassified Valve: Unclassified

→ Indicates a change

Type of Valve	Pulse Magnetron Fixed Frequency
Prototype	4J50A with different frequency, with modified mounting plate, and modified cooling fins.(VX2525).

RATING

Rating as on Page 1 of MIL-E-1/979C with additions as in Notes AA-CC.

MARKINGS
See K1001/4
Additional Markings
(a) Serial No.
(b) Frequency as measured in the test specification shall be indicated in Mc/s, in association with the serial No. the first and last figures being omitted e.g. valve number 1234 on a frequency of 9231 Mc/s would be marked "Serial 1234/23"

TESTS

Tests as on pages 2 and 3 of MIL-E-1/979C with additions as in notes EE-HH.

Connections & Dimensions

As on pages 5 and 6 of MIL-E-1/979C read in conjunction with drawing on page C. Notes EE and KK also apply.

NOTES

A.A. Amend frequency to 9240 Mc/s.

B.B. The duty cycle of .001 may be exceeded provided that Pi does not exceed 635 watts, and that ib lies between 15 amps and the stated MAXimum limits.

C.C. Output Coupling Add:- Magnetron couples to choke flange Z830033. Details of this and related items are given in RCL351, 352, which may be obtained from Radio Components Standardisation Committee, 77-91, New Oxford Street, London W.C.1.

D.D. Copies of "Inspection Instructions for Electron Tubes" (ASESA) as called up in MIL-E-1 can be obtained from the Secretary, TL5(b), The Ministry of Aviation, Castlewood House, 77-91, New Oxford Street, London W.C.1.

E.E. Page 2(a) Qualification Approval:- Read as required for CV markings. (b) Dimensions: Read as "per outline drawing" on pages 4 and 5 but with modified mounting plate and cooling fins as detailed on Page C.

(c) Carton Drop: Add: to meet the requirements of K1005.

F.F. Pages 2 and 3 Amend frequencies as under :-

(a)	Phase of Sink	9240 Mc/s.
(b)	Osc 1 Frequency	9210 - 9270 Mc/s.
(c)	Life Test End points	9210 - 9270 Mc/s.
(d)	Note 5	9150 - 9290 Mc/s.

G.G. The following shall refer to r.r.v. for Osc 1 and Osc 2 :-

The Rate of Rise of Voltage of the test modulator shall be determined by the method given below.

The value obtained for the Rate of Rise of Voltage must not be less than the value specified. A modulator will be accepted as having suitable characteristics in respect of Rate of Rise of Voltage if the instantaneous value of the Rate of Rise of Voltage measured with the modulator adjusted to give the specified operating conditions with the magnetron under test and with the magnetron then replaced by a capacitor of value equal to the nominal input capacitance of the magnetron where specified and otherwise equal to the average calue for the type of magnetron submitted, the measurement being made over the interval between the point where the voltage first equals 80% and the point where the voltage first equals 100% of the Pulse Voltage of the magnetron under test, measured under the conditions obtaining during the test, does not fall after the maximum in this interval to not less than 95% of its maximum value nor has a value less than 90% of its maximum at any point in the interval.

Measurement of Rate of Rise of Voltage. The Rate of Rise of Voltage is defined as the maximum instantaneous value of the rate of rise of voltage measured across the magnetron under Test after the voltage first exceeds 80% of the Pulse Voltage of the magnetron under test measured under the conditions specified for the test.

H.H. No technical information shall appear on the valve or its packing, except as required under "Markings".

J.J. Delete Note 9.

K.K. The diameter of the undimensioned collar on the cathode terminal shall not exceed 1.375 inches. (This can be found on the central projection and on the two left hand scrap views of the terminal and assemblies).

CV 2473

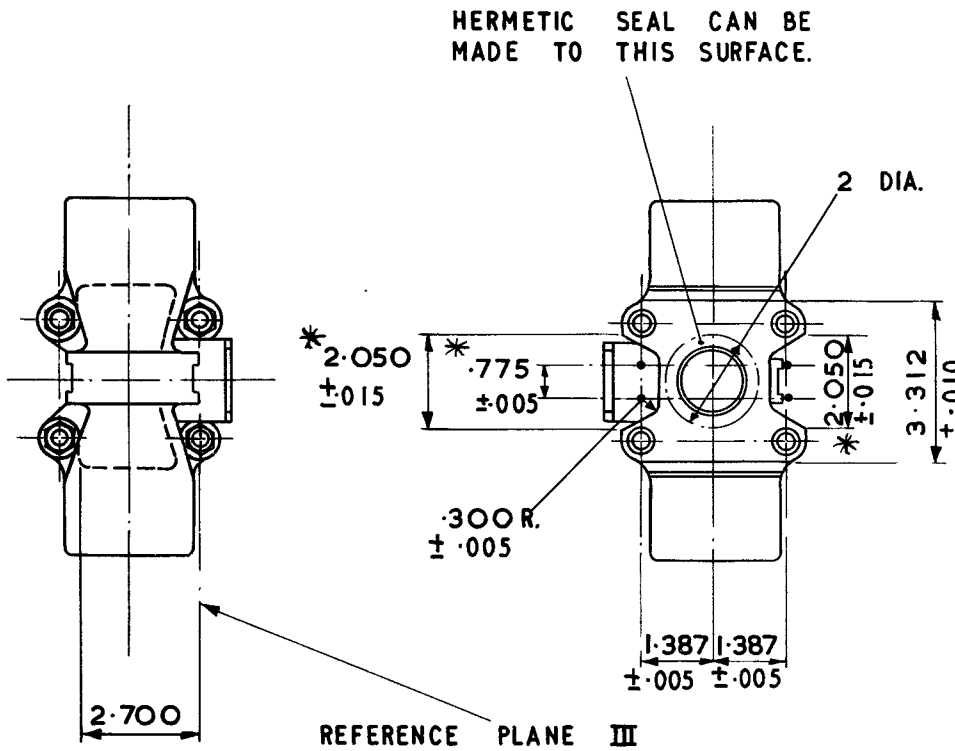

FOR FURTHER DIMENSIONS & INFORMATION SEE SPEC. MIL-E-1/979C. ON SPEC. MIL-E-1/979C DIMNS. B & C ARE REDUNDANT, DIMNS. 'H' & 'AU' ARE REPLACED.

* THESE DIMNS. SHALL BE EQUALLY SPACED ABOUT THE CENTRE LINE CONTROLLING THE FIXING HOLES

DIMENSIONS IN INCHES

MIL-E-1/979C
18 June 1957
SUPERSEDING
MIL-E-1/979B
26 December 1956

INDIVIDUAL MILITARY SPECIFICATION SHEET

ELECTRON TUBE, MAGNETRON, PULSE

JAN-4J50A

This specification sheet forms a part of the latest issue of Military Specification MIL-E-1.

Description: Magnetron, Pulse, 9375 Mc Nominal Fixed Frequency, 225kw Nominal Peak Power Output, Permanent Magnet, Air Cooled

Absolute Ratings: (Note A)

Parameter:	Ef	If	tk	VSWR	rrv	Alt.	Anode T	Cathode T	Du
Units:	V	A	sec.		kv/us	mm of Hg	°C	°C	—
Maximum:	15	15	—	1.5	160	—	150	165	.001
Minimum:	—	—	180	—	60	600	—	—	—
Notes:	D	(Surge)	—	—	—	—	E	E	—

Design Ratings: (Notes B & C)

Parameter:	Ef	ib	Pi	tp	rrv @ tp= 0.5 us	rrv @ tp= 1.75 us	rrv @ tp= 5.0 us	Pressurisation Input	Pressurisation Output
Units:	Vac	a	W	us	kv/us	kv/us	kv/us	PSIA	PSIA
Maximum:	Note D	27.5	750	6.0	160	140	110	45	45
Minimum:	Note D	—	—	—	120	95	70	—	—
Notes:	—	F	—	—	C	C	C	—	G

Output Coupling: Magnetron couples to a UG-52A/U choke flange.

Note A: These ratings can not be used simultaneously and no individual rating should be exceeded. The requirements of MIL-E-1, paragraph 6.5 apply.

Note B: To relate the various parameters employ the following formula:

$$Pi = ib \times Du \times 21.5kv$$

Note C: The rate of rise of voltage (rrv) shall be expressed in kilovolts per microsecond defined by the steepest tangent to the leading edge of the voltage pulse above 80 percent amplitude. Any capacitance used in viewing system shall not exceed 6.0 uufd.

Note D: Prior to the application of high voltage, the cathode shall be heated to the required initial operating temperature. This may be done by applying 13.75 volts for three minutes. On standby, the heater voltage shall not exceed 13.75 volts. On the application of anode power, the heater voltage should be lowered to the voltage specified, and for various power inputs, up to 595 watts, it should be adjusted approximately (within 5 percent) according to the following formula:

$$Ef = 14 - 0.0125\ Pi$$

For inputs above 595 watts, the following formula shall be used:

$$Ef = 24 - 0.0293\ Pi$$

The tube heater shall be protected against arcing by the use of a connector that places a minimum capacitance of 4000 uufd across the heater directly at the input terminals.

Note E: To be measured at the point specified on the Outline Drawing.

Note F: For pulse widths above 1.2 us, the maximum design pulse current shall be reduced in accordance with the following formula:

$$ib = 29.6 - 1.934\ tp$$

Note G: To prevent waveguide breakdown, pressurization is required.

For miscellaneous requirements, see Paragraph 3.3 Inspection Instructions for Electron Tubes.

Ref.	Test	Conditions		Min.	Max.	
3.1	Qualification	Required for JAN Marking				
4.5	Holding Period:	t= 168 hours				
4.9.2	Dimensions:	Per Outline Drawing				
4.9.8	Salt Spray Corrosion:	Omit				
4.9.18	Container Drop:	(1) Package Group 9; Container Size D				
4.9.19.1	*Vibration:	No Voltages				
4.9.19.2	**Vibration:	No Voltages				
———	**Phase of Sink:	F=9375Mc, Note 8	Dist:	.25	.40 λg	
4.9.13	Pressurizing:	40 to 45 psia; input and output assemblies				
4.10.8	Heater Current:	Ef= 13.75 Vac; tk= 180 (Min.)	If:	3.0	3.5	A
4.16.3	Oscillation (1):	Notes 1, 2, and D				
4.16.3.2	Heater:	Ef=13.75 Vac for tk=180 (Max.); Ef=6.6 Vac for test				
4.16.3.3	Pulse Characteristics:	tp=0.5$\pm$ 0.05 us; Du=0.001; rrv=160 kv/us (min.)				
4.16.3.4	Average Anode Current:	Ib=27.5 mAdc				
4.16.3.5	Pulse Voltage:		epy:	20.0	23.0	kv
4.16.3.6	Power Output:		Po:	225	—	W
4.10.7.3	Frequency:	Temp. of anode block approx. 100°C	F:	9345	9405	Mc
4.16.5	Pulling Factor:		Δ F:	—	15	Mc
4.16.3.7	Spectrum Measurements:	Notes 3, 4, and D Ib= 18, 23 and 27.5 mAdc				
	Minor Lobes		Ratio:	6	—	db
	R. F. Bandwidth		Δ F:	—	2.5/tp	Mc
———	Stability:	Notes 3 and 5	M.P.:	—	1.0	%
4.9.14	**Temperature Coefficient:	Anode temp = 70°C to 100°C at reference point	$\Delta F/\Delta T$:	—	0.25	Mc/°C
4.16.1	**Air Cooling:	Note 6	Δ T:	—	50	°C
4.9.12	**Low Pressure Operation:	Pressure=600 mm Hg absolute (max.)				
4.16.3	Oscillation (2):	Notes 1, 2, and D				
4.16.3.2	Heater:	Ef=13.75 Vac for tk=180 (Max); Ef=9.2 Vac for test				

Ref.	Test	Conditions	Min.	Max.
4.16.3.3	Pulse characteristics:	tp=5.5 ± 0.5 us; Du= .001; rrv= 110 kv/us(min.)		
4.16.3.4	Average Anode Current:	Ib= 18 mAdc		
4.16.3.6.1	*Power Output:		Po: 140	— W
4.16.3.7	*R. F. Bandwidth:		Δ F: —	1.0 Mc
———	/Stability:	Notes 3, 5 and 7	M.P.: —	1.0 %
4.9.15	**Low Temperature Operation:	tk= 180 (max.)		
4.11	Life Test:	Oscillation (1); Group D; VSWR = 1.5:1 (min.) cycled through λ g i- 30 minutes max.	Life: 682	— Cycles

One cycle shall consist of the following:

Condition	Ib	Ef	Duration
Standby	0	13.75 Vac	3 minutes
Osc. (1)	27.5 mAdc	6.6 Vac	22 minutes
Off	0	0	5 minutes minimum

4.11.4	Life Test End Points:	Oscillation (1)		
		Power Output	Po: 170 —	W
		Frequency	F: 9345 9405	Mc
		R. F. Bandwidth	Δ F: — 3.0/tp	Mc
		Stability	M.P.: — 2.0	%
		Side Lobes	Ratio: 6.0 —	db

Note 1: The Modulator shall be such that the energy per pulse delivered to the tube, if arcing occurs, can not greatly exceed the normal energy per pulse.

Note 2: The load termination of the magnetron during this test shall be a waveguide line with a VSWR of less than 1.05:1 except where specifically noted.

Note 3: The tube shall be operated into a transmission line with a VSWR of 1.5:1 adjusted in phase to produce maximum spectrum degradation.

Note 4: A suitable spectrum is considered one in which the major lobe has a shape such that its slope does not change sign more than once for power levels greater than the specified db below its peak.

Note 5: Stability shall be measured in terms of the average number of output pulses missing, expressed as a per cent of the number of input pulses applied during the period of observation. The missing pulses (M.P.), due to any causes, are considered to be "missing" if the RF energy is less than 70 percent of the normal energy level in the frequency range of 9330 to 9425Mc. The VSWR of Note 3 shall be adjusted to that phase producing maximum instability and the missing pulses counted during any consecutive five minute interval of a ten minute test period.

Note 6: An air flow of 80 cfm at approximately 760 mm of mercury will be directed on the cooling fins from an orifice of 4-1/4 by 1-1/4 inches. The temperature rise shall be measured at that point on the anode block specified on the outline drawing.

Note 7: This test shall be the first one performed after the specified holding period.

Note 8: Using a standard cold test technique, the phase of sink as measured from the output flange to the first minimum, toward the load, shall be within the limits specified herein.

Note 9: Referenced specification shall be of the issue in effect on the date of invitation for bids.

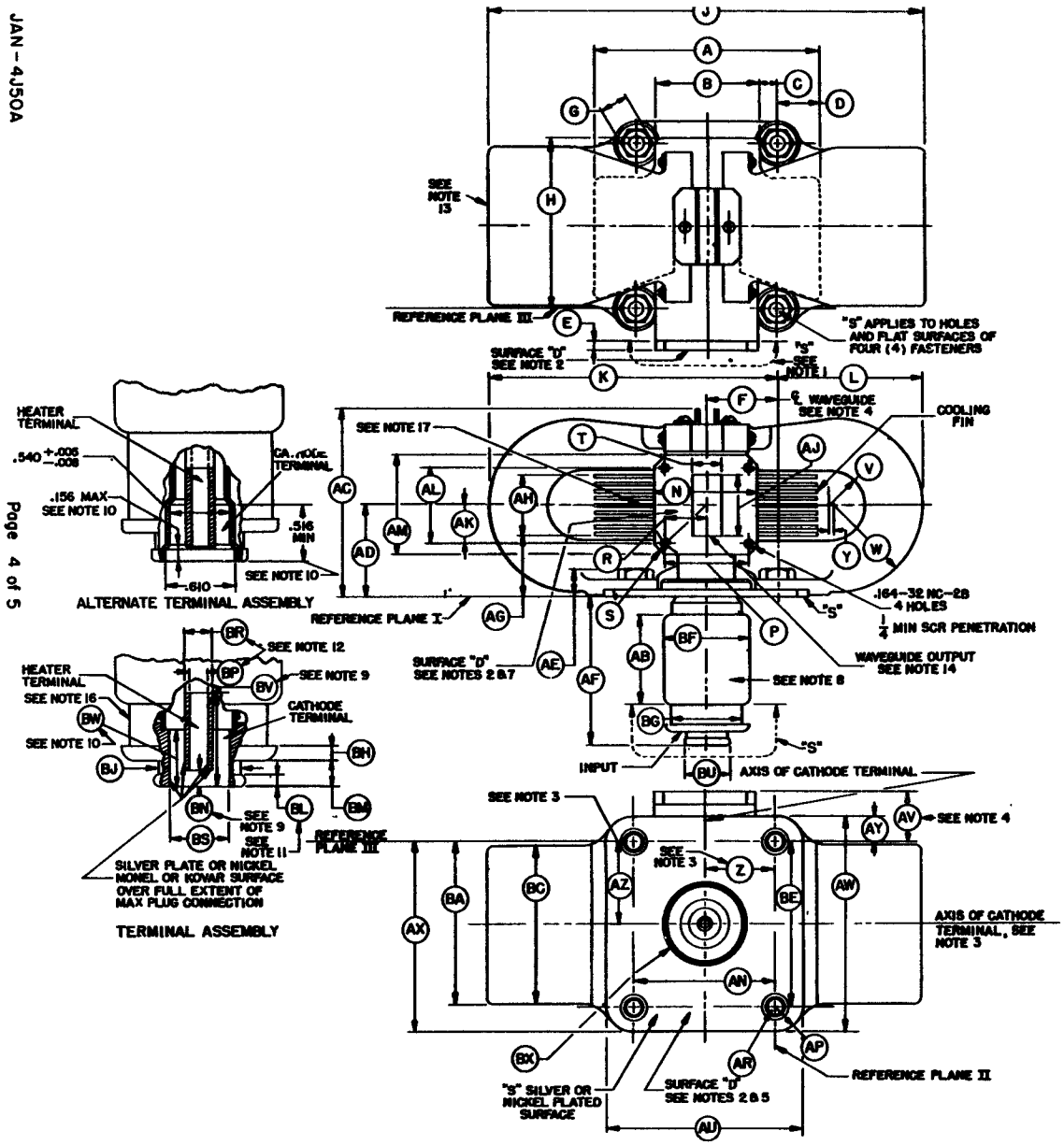

REF	DIMENSIONS MIN	DIMENSIONS MAX
**A	4.000	
**B	1-7/8	
**C	5/16	
**D	3/4	
**E	1/4 (FLANGE)	
F	1.250	
**G	1/2	
*H		3-1/8
*J		7-11/16
*K		5-3/32
*L		2-19/32
**N	1.830	
P	1.470	1.478
R	.732	.742
**S	1-5/32 R	
**T	.497	
**V	5/8 R	
**W	1-9/16 R	
**Y	3/64	
Z	1.250	
**AB	1 1/2 (MIN. GLASS LENGTH	
*AC		3-13/32
AD	1.633	1.673
*AE	19/32	21/32
AF	2-5/8	2-3/4
**AG	1-3/32	1-3/16
**AH	61/64	1-3/64
**AJ	1.122	
AK	.671	.681
AL	1.348	1.356
**AM	1.820	1.840
AN	2.490	2.510
**AP	13/32 R	
*AR	.276 DIA	.286 DIA
*AU		3-15/32
AV	.882	.932
*AW		3-7/8
*AX		3-27/64
*AY		27/64
AZ	1.500	
*BA		3.000
*BC		2-7/8
BE	2.990	3.010
**BF		1-1/2
**BG	1-1/4 DIA	
**BH	.125	
**BJ	.750 DIA	
BL	.115	.135
BM	.250	
BN	.125	.187
BP	.164	.174
BR	15/64	17/64
BS	.532	.545
BU	.825	.838
BV	3/4	
BW	.516	
*BX		1-1/2 DIA

NOTES:

** 1. ALL METAL SURFACES COVERED BY BLACK FINISH EXCEPT THOSE MARKED "S" & "D". ("S" SHALL BE SILVER OR NICKEL PLATED SURFACES)

2. HERMETIC CONNECTIONS CAN BE MADE TO SURFACE "D".

3. THE AXIS OF THE CATHODE TERMINAL SHALL BE WITHIN A RADIUS OF 3/64 OF THE SPECIFIED LOCATION. (NOTE 4 APPLIES)

4. THE LIMITS INCLUDE ANGULAR AS WELL AS LATERAL DEVIATIONS.

* 5. ALL POINTS ON THE MOUNTING SURFACE SHALL BE WITHIN .005 OF REFERENCE PLANE I.

** 6. DIMENSIONS WITHOUT LIMITS ARE FOR EQUIPMENT DESIGN AND QUALIFICATION APPROVAL ONLY AND NEED NOT BE CHECKED.

* 7. WITH THE FLANGE ON A PLANE SURFACE, A .005 THICKNESS GAUGE 1/8 WIDE SHALL NOT ENTER.

8. ANY PORTION OF THE ASSEMBLY EXTENDING BELOW REFERENCE PLANE I SHALL BE WITHIN A 3/4 RADIUS OF THE SPECIFIED AXIS OF THE INPUT.

9. THESE DIMENSIONS DEFINE THE EXTREMITIES OF THE CYLINDRICAL SECTION GIVEN BY THE "BP" DIMENSION.

10. THESE DIMENSIONS DEFINE THE EXTREMITIES OF THE CYLINDRICAL SECTION GIVEN BY THE "BS" DIMENSION.

**11. NO CLAMPING MEANS TO BEAR BEYOND THIS DIMENSION.

12. THE HEATER TERMINAL SHALL BE CONCENTRIC WITH THE CATHODE TERMINAL WITHIN .010.

13. WARNING - MAINTAIN MINIMUM CLEARANCE 2 INCHES BETWEEN THIS MAGNET AND MAGNETIC MATERIAL (MAGNETS, STEEL TOOLS, PLATES, ETC).

**14. THE OPENING IN THE WAVEGUIDE SHALL BE ENCLOSED BY A DUST COVER WHEN TUBE IS NOT IN USE.

15. MEANS OTHER THAN SOFT SOLDER SHALL BE USED FOR MECHANICAL STRENGTH.

16. THE INCLUSION OF A CYLINDRICAL RIB 1/8 WIDE, 1.312±.015 DIAMETER WITH CENTER LOCATED 9/32 FROM THE BOTTOM EDGE OF THE FLANGE MAY BE USED AS AN ALTERNATE DESIGN.

17. TEMPERATURE RISE TEST POINT. THIS POINT IS ON THE ANODE BLOCK IN FRONT OF COOLING FINS.

AVIATION

MINISTRY OF [redacted] - ILRD/RRE

AL2. THIS VALVE MAY BE RADIOACTIVE.
AL3. TO CHASSI SEE K1001 APPENDIX XA

VALVE ELECTRONIC

CV2483

Specification M[redacted]/CV2483 Issue 1 Dated 25th August, 1958. To be read in conjunction with K1006 except where otherwise stated.	SECURITY	
	Specification	Valve
	Unclassified	Unclassified

→ indicates a change

TYPE OF VALVE - Microwave pulsed attenuator tube

ENVELOPE - Silica

PROTOTYPE - VX9208

RATING	Max.	Normal	Min.	Note
Operating frequency range K.Mc/s	12		8	A
Microwave incident power Watts	200			B
Excitation pulse width uS	3.5		2.0	C
Excitation frequency Mc/s	-	50	10	D
Peak excitation power Watts		80		D
Attenuation dbs			25	E C

MARKING

See K1001/4.

CV number and serial number on Silica envelope.

A green spot to be marked on seal off tip.

EXCITATION

By R.F. applied to an external metal sleeve

DIMENSIONS

See drawing on Page 3

MOUNTING POSITION

Any

NOTES

A. The tube is matched at any frequency in this range by a waveguide iris, normal loaded Q value 4. The match will remain constant for different tubes.

B. Except where the peak microwave power is spike leakage of less than 0.02 microseconds duration the tube should be preceded by a suitable power limiter for incident microwave peak power in excess of 200 watts.

C. This attenuation is developed coincident with the trailing edge of the R.F. excitation pulse.

D. The recovery time and attenuation is dependent upon the operating electron density in the tube which reaches its limited value in about 2 microseconds. After ionisation the limit is determined primarily by the impedance of the excitation source.

E. At X band, loaded Q value 4, excitation power 80 watts peak.

Typical operating conditions

Two tubes may be used in a four element filter network designed for a 10% pass-band to a V.S.W.R. of 0.85. Under these conditions a minimum peak attenuation of 50 dbs is obtained with a maximum recovery time of 8 microseconds to 6 dbs. When operating with incident microwave power in excess of 200 watts flat peak the first element of the filter network should include a power limiter tube. The insertion loss for a typical mount at X band is 0.3 dbs.

TEST CONDITIONS - Unless otherwise specified

tp (excitation pulse) uS	Du (excitation pulse)	Test Mount	Test Circuit
3 ± 10%	0.003 ± 10%	Page 4	Page 5

Qualification Approval Tests

K1006 Ref.	Test	Conditions	Insp. Level	Min.	Max.	Units
K1005	Carton Drop:					
4.9.[illegible].2.	Vibration:	No voltages				
4.9.20.3.	Shock:	No voltages Shock applied along tube axis only. Hammer angle = 30°.				
4.18.15.1.	Recovery time:	Notes 1 and 2			8	uS
	Peak attenuation	Notes 1 and 2		25	-	dbs
4.11.13.	Life test:	tp(excitation pulse) 2 us Du(excitation pulse) 0.01 No incident microwave power.		1000	-	hours
4.11.4.	Life test end points:	Peak attenuation Recovery time		25		dbs us
	V.S.W.R.	Note 1		0.95		VSWR

Acceptance Tests

Ref.	Test	Conditions				
4.18.15.1.	Recovery time	Notes 1 and 2	100%		8	us
	Peak attenuation	Notes 1 and 2	100%	25		dbs

NOTES

1. The tube shall be tested in a mount having a loaded Q of 4 ± 5% at a frequency of 9.16 ± 10% KMc/s. The mount shall be resonant at the test frequency, the V.S.W.R. being not less than 0.95. The mount shall be provided with a suitable monitor of excitation current which will be used in conjunction with standard tubes to check the output of the excitation oscillator before tests. A drawing of a suitable mount and current monitor circuit is shown on page 4. A circuit of a suitable excitation oscillator for this mount is shown on page 5.

2. The recovery time shall be measured with reference to the trailing edge of the R.F. excitation pulse. The time in microseconds shall be taken as the longest indicated by the pulse jitter. The peak attenuation shall be measured within the period 1.0 microsecond after the trailing edge of the excitation pulse. A recovery time curve for an average tube is shown on page 6.

CV2483

MICROWAVE PULSED ATTENUATOR

To be read in conjunction with K.1006

Ratings.	F Mc/s	p_1 r, fW	t_p (excitation) (pulse) u.s.	f (excitation) (frequency) Mc/s	p_1 (excitation) (pulse) W	Attenuation dbs
Absolute maximum	-	200	3.5	-	-	
normal	8 - 12	-	-	50	80	
minimum	-	-	2.0	10	-	25
Note	A	B	C	D	D	E.C.

Dimensions See outline drawing

Excitation R.F. applied to an external metal sleeve.

Notes

A. The tube is matched at any frequency in this range by a waveguide iris, normal loaded Q value 4. The match will remain constant for different tubes.

B. Except where the peak microwave power is spike leakage less than 0.02 microseconds duration the tube should be preceded by a suitable power limiter for incident microwave peak power in excess of 200 watts.

C. This attenuation is developed coincident with the trailing edge of the R.F. excitation pulse.

D. The recovery time and attenuation is dependent upon the operating electron density in the tube which reaches its limited value in about 2 microseconds. After ionisation the limit is determined primarily by the impedance of the excitation source.

E. At X band, loaded Q value 4, excitation power 80 watts peak.

Test Conditions

tp (excitation pulse) u.s.	Du (excitation pulse)	Test Mount	Test Circuit
3 ± 10%	0.003 ± 10%	Page.4.	Note 2.

OUTLINE DRAWING

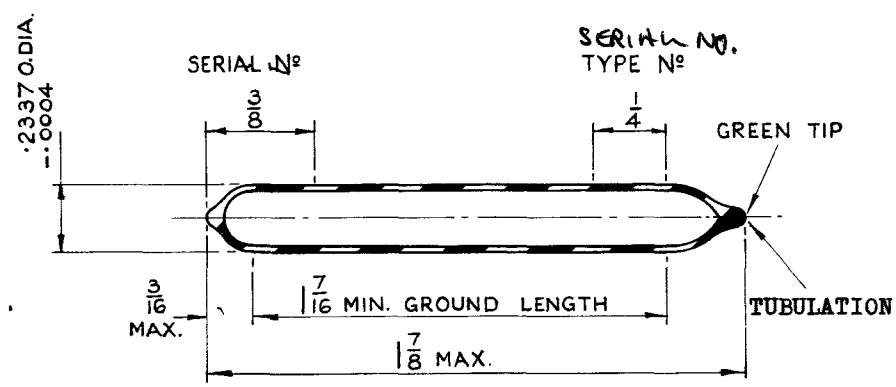

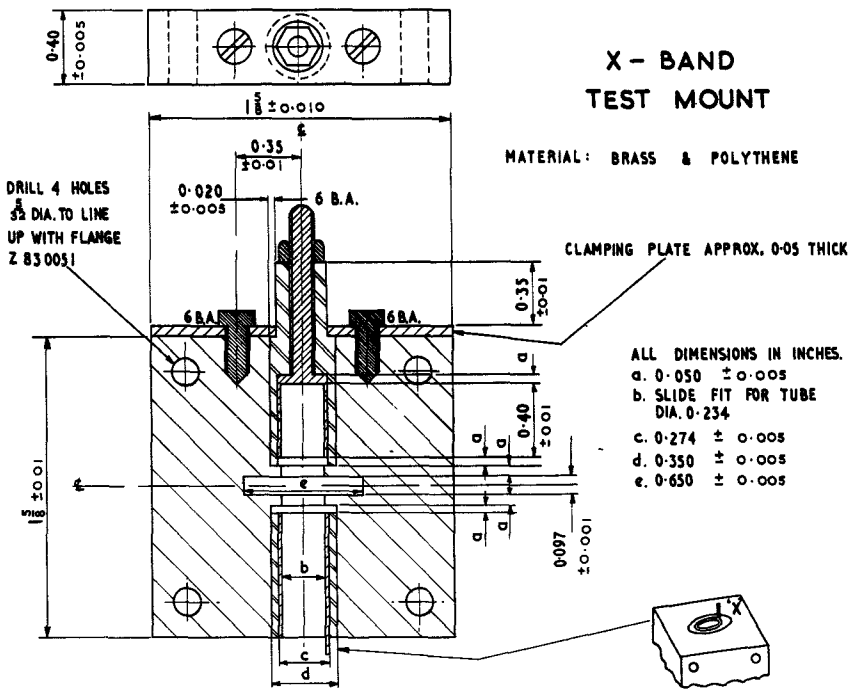

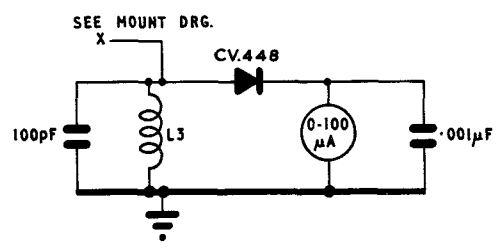

MONITOR CIRCUIT.

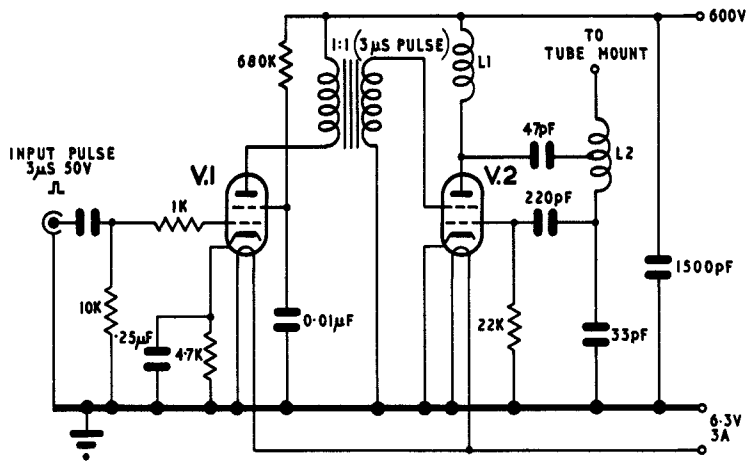

EXCITATION OSCILLATOR.

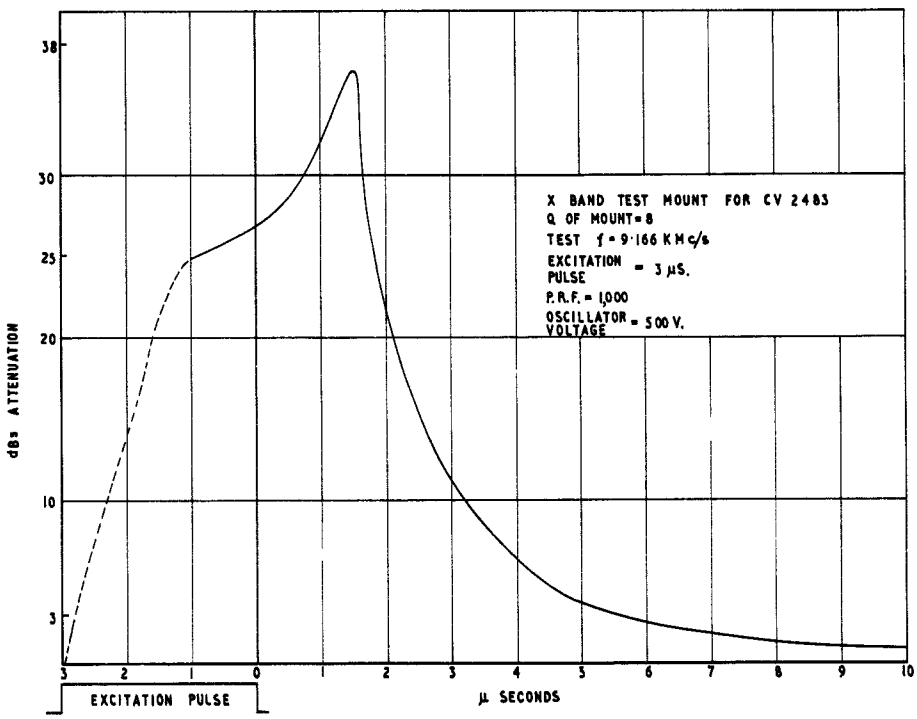

RECOVERY TIME CURVE FOR AVERAGE CV2483 TUBE.

VALVE ELECTRONIC CV2494

Specification Mintech./CV2494
Issue 1A, Dated December 1967
To be read in conjunction with K1001 except where otherwise stated.

SECURITY

Specification	Valve
UNCLASSIFIED	UNCLASSIFIED

TYPE OF VALVE - Tunable Reflex Klystron Oscillator
CATHODE - Indirectly Heated
Envelope - Metal Ceramic
Prototype - VA201B

MARKING
See K1001/4

BASE
Flying Leads 18" Long

RATINGS AND CHARACTERISTICS

Absolute non-simultaneous and not for inspection purposes

			Note
Heater Voltage	(V)	6.3	
Heater Current	(A)	1.2	
Mechanical Tuning Frequency Range (Mode 6)	(MHz)	8,500 to 9,655	B
R.F. Power Output Range (Mode 5)	(mW)	40 to 120	
R.F. Power Output Range (Mode 6)	(mW)	12 to 66	
Min. R.F. Power Output (Mode 7)	(mW)	8	
Max. Resonator Voltage	(V)	350	
Max. Resonator Current	(mA)	55	
Reflector Voltage Range	(V)	0 to -500	C
Max. Resonator/Reflector Voltage	(V)	550	
Min. Electronic Tuning Range (Mode 5)	(MHz)	20	
Min. Electronic Tuning Range (Mode 6)	(MHz)	30	
Max. Heater-Cathode Voltage	(V)	45	
Max. Body Temperature	(°C)	200	
Max. Vibration, 20Hz to 1kHz, (2 mins. max. duration)	(g)	10	
Max. Shock (short duration)	(g)	100	
Min. Operating Pressure	(mm Hg)	70	

CONNECTIONS

Lead Colour

Code	Electrode	
Yellow	Heater	h
Yellow	Heater	h
Green	Cathode	k
Grey	Reflector	Ref.
Tan	Resonator	Res.

Output Waveguide WG16.

DIMENSIONS.
See Outline Drawing Page 7.

Mounting Position
Any

CLIMATE
Non Tropical

ALTITUDE
100,000 Feet

NOTES

A. Caution to Electronic Equipment Design Engineers. Special attention should be given to the temperature of valves to be operated in Guided Weapons and Aircraft. Reliability will be seriously impaired if the maximum body temperature is exceeded. The life expectancy may be reduced if conditions other than those specified for life test are imposed on the valve and will be reduced appreciably if absolute maximum ratings are exceeded. Both reliability and performance will be jeopardized if Heater Voltage ratings are exceeded; life and reliability performance are directly related to the degree that regulation of the Heater Voltage is maintained at its centre-rated value. Under no circumstances should the heater voltage supply be allowed to deviate more than ± 10% from the rated value.

B. Clockwise rotation of the Tuner Shaft decreases the frequency.

C. The Reflector Voltage must always remain negative with respect to the Cathode. If under A.F.C. working there is any possibility of the Reflector Voltage becoming equal to or more positive than the Cathode a protective diode must be fitted to the Reflector.

D. Load. For correct functioning of the valve the load should meet the following conditions:-

(a) At the frequency of operation this should present a V.S.W.R. of less than 1.2 to the valve.

(b) Over the frequency ranges: 7,800 to 8,500 MHz and 9,655 to 10,500 MHz the load should present a V.S.W.R. of less than 1.5 to the valve.

Failure to meet condition (b) may result in the occurrence of spurious modes.

CV2494

TESTS

To be performed in addition to those tests applicable in K1001

TEST CONDITIONS: unless otherwise specified

Note 1	Vres.(V)	Vref.(V)	Load
Vh (V) 6.3	300	Adjust for Max.Po at the appropriate Mode	V.S.W.R. not greater than 1.1:1

K1001 5B	Test	Test Condition	AQL %	Insp. Level	Symbol	Limits Min.	Limits Max	Units
	GROUP A							
3.1.1	Heater Current	Vh only		100%	Ih	1.0	1.32	A
3.3.1	Reflector Current	Notes 4 and 5		100%	Iref.	-	2	/uA
	Oscillation (1)	Frequency 8500 MHz Mode 5						
	Resonator Current			100%	Ires.	-	45	mA
	Negative Reflector Voltage			100%	Vref.	80	135	V
4.1	Power Output			100%	Po	40	120	mW
	Oscillation (2)	Frequency 9655 MHz Mode 5		100%				
	Resonator Current			100%	Ires.	-	45	mA
	Negative Reflector Voltage			100%	Vref.	130	190	V
4.1	Power Output			100%	Po	40	120	mW
3.4	Emission							
	Change in Ires.	Heater voltage varied from 5.7 to 6.3V. Note 5.		100%	$\frac{\Delta Ires.}{Ires.}$	-	15	%
	Modulation Sensitivity	Measured at 8500 MHz and 9655 MHz. Mode 5. Maximum Frequency change ± 2.5 MHz.		100%	$\frac{\Delta f}{\Delta Vref.}$	0.5	-	MHz/V
4.2.3	Mechanical Tuning Range	Mode 6		100%	F	8500	9655	MHz
Section 11.1	Vibration	At a random frequency between 8500 MHz and 9655 MHz. Notes 2 and 8.		100%	Iref.	-	10	/uA
4.2.8	Hysteresis	Mode 5		100%		-	50	%

K1001	Test	Test Condition	AQL %	Insp. Level	Sym-bol	Limits Min.	Limits Max.	Units
	GROUPS B and C omitted.							
	GROUP D							
	Oscillation (1)	Frequency 8500 MHz. Vres = 250 Volts Mode 6.						
	Negative Reflector Voltage		6.5	I	Vref.	40	90	V
4.1	Power Output		6.5	I	Po	12	66	mW
	Oscillation (2)	Frequency 9655 MHz. Vres. 250 Volts Mode 6.						
	Negative Reflector Voltage		6.5	I	Vref.	90	125	V
4.1	Power Output		6.5	I	Po	12	66	mW
	Oscillation (3)	Frequency 9400 MHz. Vres. = 250 Volts Mode 6.						
	Negative Reflector Voltage		6.5	I	Vref.	82	115	V
	Oscillation (4)	Frequency 9350 MHz. Vres. = 235 Volts Mode 7.		Q.A.				
4.1	Power Output				Po	8	-	mW
	Negative Reflector Voltage				Vref.	30	90	V
4.2.6	Electronic Tuning Range (1)	Measured at 8500 MHz and 9655 MHz. Mode 5. Adjust Vref. to give ½ power points.	6.5	I	Δf	20	-	MHz
4.2.6	Electronic Tuning Range (2)	Measured at 8500 MHz and 9655 MHz. Vres. = 250 Volts. Mode 6. Adjust Vref. to give ½ power points.	6.5	I	Δf	30	-	MHz

K1001	Test	Test Condition	AQL %	Insp. Level	Sym-bol	Limits Min.	Limits Max.	Units
	Modulation Sensitivity	Measured at 8500 MHz and 9655 MHz. Vres. = 250 Volts Mode 6. Maximum frequency change ± 2.5 MHz.	6.5	I	$\frac{\Delta f}{\Delta Vref.}$	1.0	-	MHz/V
7	Mechanical Tuning Torque	Tuning over the frequency range 8500 MHz to 9655 MHz.	6.5	I		-	50	oz.ins.
	Frequency/Heater Voltage Coefficient	Frequency 8500 MHz. Vres. = 250 Volts Mode 6. Heater Voltage varied from 5.7 to 7.0 volts.		Q.A.	$\frac{\Delta f}{\Delta Vh}$	-	1.5	MHz/V
5.3	Frequency/ Temperature Coefficient	At a random frequency between 8500 MHz and 9655 MHz. Mode 5. Body temperature to be varied from 25° to 95°C.		Q.A.	$\frac{\Delta f}{\Delta T}$	+0.05	-0.10	MHz/°C
	GROUP E							
	Vibration Frequency Modulation	At a random frequency between 8500 MHz and 9655 MHz. Mode 5 Note 9.		Q.A.	$\frac{\Delta f}{\Delta g}$		20	kHz/g
	Pressure Test	At any random frequency between 8500 MHz and 9655 MHz. Mode 5 t = 10 secs. Note 6.		Q.A.	Δf	-	2	MHz
	Shock Test	At any random frequency between 8300 MHz and 9655 MHz. Shock duration = 6mS. Mode 5 Acceleration = 100g. Note 3.		Q.A.	Δf	-	1.5	MHz

K1001	Test	Test Condition	AQL	Insp. Level	Sym-bol	Limits Min.	Limits Max.	Units
	GROUP F							
App. VI, 5.3	Life	At any random frequency between 8500 MHz and 9655 MHz. Mode 5 Note 10.						
	Life test end point. 500 hours.							
4.1	Output Power				Po	32	-	mW
	GROUP G							
	Electrical Retest after 14 day storage.							
	Inoperatives	No voltages		100%				
3.3.1	Reflector Current			100%	$\Delta I_{ref.}$	-	2	μA
3.4	Emission	As in Group A.		100%	$\frac{\Delta I_{res.}}{I_{res.}}$	-	15	%

NOTES

1. All oscillation tests except vibration and shock tests shall be made with the valve rigidly connected to a UG-39/U flange on appropriate RG-52/U waveguide equipment and the load V.S.W.R. for the valve shall be less than 1.1:1.

2. The reflector current shall be recorded with a Brush Model BL 202 recorder or equivalent. There shall be no Reflector Current bursts greater than the limit shown.

3. The valve shall be given 5 shocks in each of 3 planes. The frequency shift, after each shock in any one plane, shall not exceed the value specified.

4. After two minutes with all voltages applied. Total Reflector Current shall not exceed the specified limits.

5. The valve shall not be oscillating during the test.

6. The frequency shall be stabilised at a pressure of 70 mm. Hg. The pressure shall be increased to atmospheric and the frequency at atmospheric read within the time specified. The resulting frequency change shall not exceed the limit specified.

7. Within the specified mechanical tuning range any spurious modes which exist shall be outside the frequency range of 8450 MHz to 9705 MHz. Any spurious modes which exist shall not interfere with or cause frequency discontinuities of the operating mode above the half power points of the operating mode.

8. The valve shall be attached by the waveguide flange to an approved mount. The valve shall be vibrated with a sinusoidal excitation of 50 Hz having a peak acceleration of 10 g. for a period of 2 minutes. The valve shall be vibrated in the direction of the electron beam.

NOTES (Cont'd)

9. The vibration tests shall be performed with the valve attached by the waveguide flange to an approved mount. The valve shall vibrate with sinusoidal excitation having a peak acceleration of 10 g. in the direction of the electron beam. This test shall consist of a complete sequence of variation in vibration frequency from 20 Hz to 1000 Hz in a time of 2 minutes. The frequency deviation resulting from the peak acceleration to be within the specified limits.

10. The criterion for acceptance of the production for 1 calendar month from which the test samples are taken is that the average life expectancy at 500 hrs (2500 tuner cycles) shall be at least 90% where life expectancy :

$$= \frac{\text{total hours of operation}}{\text{number of samples x 500 hours}} \times 100\%$$

The number of samples shall not be less than one per month and may be increased above 4% of production at the manufacturer's discretion.

OUTLINE DRAWING

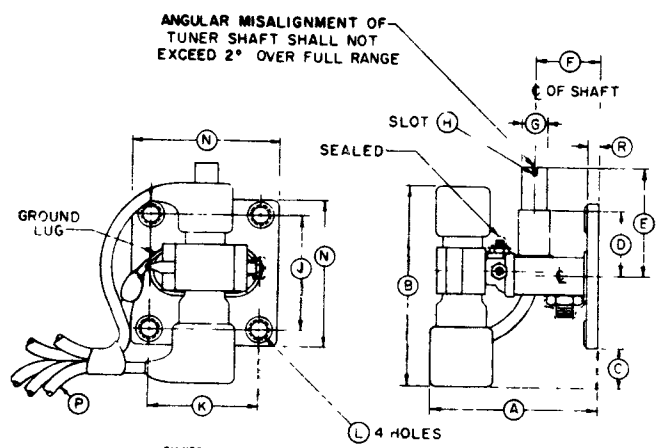

CABLE CONNECTIONS	
(2) YELLOW	HEATER
GREEN	CATHODE
GREY	REFLECTOR
TAN	B+

REF	DIMENSIONS
A	1.937 MAX
B	2.500 MAX
C	.490 MAX
D	.812 MAX
E	1.500 MAX
F	.720 NOM
G	.281 MAX .278 MIN
H	.040 WIDE x .100DP NOM
J	1.284 MAX 1.276 MIN
K	1.224 MAX 1.216 MIN
L	.219 DIA NOM WITH .185 DIA NOM REMOVABLE INSERTS
M	1.500 MAX .250 MIN
N	1.640 MAX 1.610 MIN
P	.18 "NOM
R	.150 MAX .105 MIN

All dimensions in inches.

VALVE ELECTRONIC

ADMIRALTY SURFACE WEAPONS ESTABLISHMENT

CV2498

Specification AD/CV2498 Issue No. 1 dated 24.3.59 To be read in conjunction with K.1001	SECURITY Specification: Unclassified Valve: Unclassified

TYPE OF VALVE:- Cathode Ray Tube

TYPE OF DEFLECTION:- Electrostatic, symmetrical or asymmetrical

TYPE OF FOCUS:- Electrostatic

BULB:- Glass internally coated with conductive coating

SCREEN:- BY8

PROTOTYPE:- DP16-22

MARKING

See K.1001/4

BASE

B14A

See B.S.448 : 1953

RATING

Heater Voltage	(V)	6.3
Heater Current	(A)	0.3
Max. Va1	(kV)	2.5
Max. Va2	(kV)	1.1
Max. Va3	(kV)	6.0
Sensitivity, x plates	(mm/V)	925/Va3
Sensitivity, y plates	(mm/V)	1000/Va3

TYPICAL OPERATING CONDITIONS

Va1	(kV)	1.8
Va2	(kV)	0.65
Va3	(kV)	5.0

CONNECTIONS

Pin	Electrode
1	h
2	k
3	g
4	a2
5	No connection
6	Internal coating, m
7	y1
8	y2
9	a3
10	x2
11	x1
12	No connection
13	a1
14	h

DIMENSIONS

See drawing on page 5.

NOTES

A. For optimum focus quality, the potential between the internal conductive coating and a3 must not exceed 10 volts.

CV2498

TESTS

To be performed in addition to those applicable in K.1001

Clause	Test Conditions	Test	Limits Min.	Limits Max.	No. Tested
a	See K.1001/5A.13	Capacitances (pF)			2%
		1. Each x plate to all other electrodes.	-	20	
		2. Each y plate to all other electrodes.	-	16	
		3. Grid to all other electrodes.	-	10	
		4. Each x plate to each y plate.	-	1.5	
		5. Cathode to all other electrodes.	-	10	
FOR ALL TESTS GIVEN BELOW, Vh = 6.3V					
b		Ih (A)	0.28	0.66	100%
c	Cathode 100 volts positive to heater	Heater - Cathode Current (μA)	-	100	100%
FOR ALL TESTS GIVEN BELOW, Va1 = 1.8 kV; Va3 = 5.0 kV; Vm = 5.0 kV, except in test 'q'. Asymmetrical x and y deflection voltages.					
d	With a focused raster of size 100 mm x 30 mm adjust Vg for a screen brightness of 10 foot-lamberts when measured through a Wratten 15 colour filter.	1. - Vg (V)	1	-	100%
		2. Ik (μA)		200	100%
		Note value of -Vg for use in tests (f) and (g).			
e	As in clause (d) Excitation time = 60 seconds.	Persistence Time to decay to 0.05 foot-lamberts (Secs.)	10	30	5%
f	With an elliptical scan of nominal dimensions 100 mm x 30 mm, and a scan frequency of 50 scans/second, adjust Va2 for overall optimum focus and set -Vg at value noted in test (d).	1. Line width (mm)		1.0	100%
		2. Va2 for focus (V)	600	700	100%

TESTS (Contd.)

CV2498

Clause	Test Conditions	Test	Limits Min.	Limits Max.	No. Tested
g	Va2 as in (f) Adjust Vg for cut-off. See K.1001/5A.10.	1. -Vg for cut-off (V)	25	70	100%
		2. Increase in value of -Vg from value noted in test (d)(V)	-	30	100%
		3. Over the range of -Vg from the cut-off value to the value noted in test (d) the beam current shall increase continuously.			100%
h	1. Vg = -80 or 2. As in K.1001/5A.3.2; with Resistor = 5 megohms.	Grid Insulation 1. Leakage Current (μA)	-	16	100%
		2. Increase in voltmeter reading.	-	100%	
j		Deflection Sensitivities			10%
		1. x plates (mm/V)	$\frac{850}{Va3}$	$\frac{1000}{Va3}$	
		2. y plates (mm/V)	$\frac{900}{Va3}$	$\frac{1100}{Va3}$	
k	See K.1001/5A.11.1	Deviation of spot from centre of screen. (mm)	-	7.5	100%
l		Orientation of Deflection Axes			
		1. Orientation of x axis of deflection relative to line OO' on drawing.	-2°	+2°	100%
		2. Angle between x and y axes of deflection.	88°	92°	100%

CV2498

TESTS (Contd.)

Clause	Test Conditions	Test	Limits Min.	Limits Max.	No. Tested
m	A screen area of at least 100 mm x 30 mm to be scanned.	Trapezoidal Distortions			10%
		1. Angle between adjacent sides.	87°	93°	
		2. Angle between opposite sides.	177°	183°	
n	Screen to be scanned with an optimum focused raster of convenient light intensity.	Useful Screen Area			100%
		x side of raster (mm)	125		
		y side of raster (mm)	35		
o	Useful screen area to be scanned with a defocused raster of convenient light intensity.	Blemishes (See Note 1)			100%
		0.25 to 0.6 mm dia; (No.)		10	
		0.6 to 1.0 mm dia; (No.)		5	
		greater than 1.0 mm dia; (No.)		0	
p	See K.1001/11.5.	Vibration			T.A.
q	With conditions as in clause 'f' above, but with the internal conductive coating, m, first at 10 volts and then at -10 volts relative to a3.	Line Width (mm)		1.0	T.A.

N O T E

1. If two or more blemishes, including bubbles and 'dead' spots, are separated by a distance not greater than the maximum dimension of the largest blemish in a group, then the group of blemishes shall be considered as one blemish of dimension equal to the maximum overall dimension of the group.

CV2498

ALL DIMENSIONS IN MILLIMETERS.

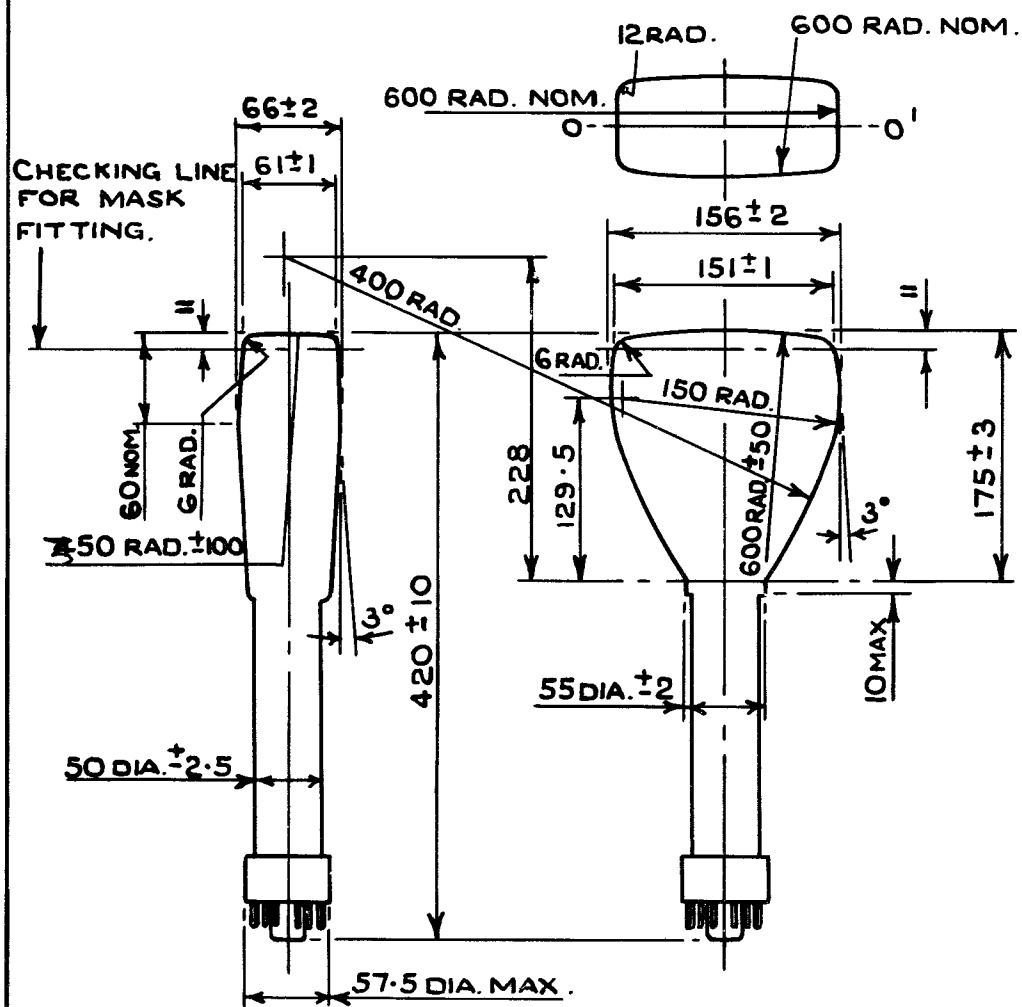

AK1.

LOOKING AT THE SCREEN WITH THE OO' LINE HORIZONTAL AND PINS 9 & 10 OF THE BASE UPPER-MOST, A POSITIVE VOLTAGE APPLIED TO TERMINAL X1 SHALL DEFLECT THE SPOT TO THE LEFT & A POSITIVE VOLTAGE APPLIED TO THE TERMINAL Y1 SHALL DEFLECT THE SPOT UPWARDS.

LIMITING POSITIONS OF ORIENTATION OF OO' WITH RESPECT TO BASE.

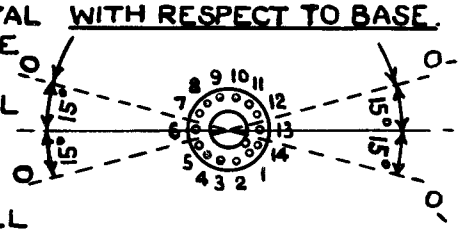

ADMIRALTY SIGNAL AND RADAR ESTABLISHMENT

VALVE ELECTRONIC CV2721

Specification AD/CV2721 Issue No. 3 Dated: 10.2.54 To be read in conjunction with K1001	SECURITY Specification: Unclassified Valve: Unclassified
⟶ indicates a change	

TYPE OF VALVE:- L.F. Pentode

CATHODE:- Indirectly Heated

ENVELOPE:- Glass, Unmetallised

PROTOTYPE:- EL81

MARKING
See K1001/4

BASE
B9A

RATING

		Note
Heater Voltage (V)	6.3	
Heater Current (A)	1.05	
Max. Anode Voltage (V)	330	
Max. Anode Voltage (Ia = 0) (V)	550	B
Max. Peak Anode Voltage (V)	7000	B
Max. Screen Voltage (V)	330	B
Max. Screen Voltage (Ig2 = 0) (V)	550	B
Max. Anode Dissipation (W)	8.8	B
Max. Screen Dissipation (W)	5	B
Max. Total Anode and Screen Dissipation (W)	11	B
Max. Cathode Current (mA)	200	B
Heater Cathode Voltage (V)	110	B
Mutual Conductance (mA/V)	4.6	A
/ug1/g2	5	

CAPACITANCES (pF)

Cge	15	
Cae	6	
Cag (Max.)	1	

CONNECTIONS

Pin	Electrode
1	Internally connected
2	G1
3	C
4	H
5	H
6	Internally connected
7	Internally connected
8	G2
9	G3
T.C.	A

TOP CAP
See K1001/A1/D5.2 ←

DIMENSIONS
See K1001/A1/D4

	Min.	Max
A	-	82 mm.
B	-	22 mm.
L	-	45mm

NOTES

A. Measured at Va = Vg2 = 250V. Ia = 32 mA

B. Absolute maximum value.

TESTS

To be performed in addition to those applicable in K1001.

	Test Conditions						Test		Limits		No. Tested	Note
	Vh	Va	Vg1	Vg2	Vg3	RC ohms			Min.	Max.		
a	6.3	-	-	-	-	-	Ih	(mA)	950	1150	100%	
b	6.3	35	35	35	35	-	Ie	(mA)	250	-	100%	
c	6.3	100	-2	100	0	-	Ia	(mA)	109	177	100%	
d	6.3	100	-10	100	0	-	Ia	(mA)	24	60	100%	
e	6.3	100	-35	100	0	-	Ia	(/uA)	-	15	100%	
f	6.3	100	+30	100	0	820	Ig2	(mA)	-	3.6	100%	
g	6.3	100	+30	100	0	820	-Ig1	(/uA)	-	1.5	100%	
h	6.3	215	0	215	0	285	-Ig1	(/uA)	-	1.5	100%	1

NOTES

1. In this test a 1700 ohms resistor must be included in series with the anode.

CV2797

MIL-E-1/152A
12 JUNE 1963
SUPERSEDING
MIL-E-1/152
20 May 1953

MILITARY SPECIFICATION SHEET

ELECTRON TUBE, RECEIVING

JAN-5894

The complete requirements for procuring electron tube described herein shall consist of this document and the issue in effect of specification MIL-E-1.

Description: Twin tetrode, push-pull RF beam amplifier

F1 = 250 Mc
F2 = 500 Mc

ABSOLUTE-MAXIMUM RATINGS:

Parameter:	Ef	Eb	Ecl	Ec2	Ehk	Ik	Ib	Icl	Pgl	Pg2	Pp	Pi	TE	Alt
Unit:	V	Vdc	Vdc	Vdc	Vdc	mAdc	mAdc	mAdc	W	W	W	W	°C	Ft
Maximum:														
C Telep:	6.9/13.8	450	-175	250	100	---	2x80	2x5	2x1	(See note 8)	2x13.5	2x36	(See note 10)	10,000
C Teleg:	6.9/13.8	600	-175	250	100	2x120	2x110	2x5	2x1	7	2x20	2x60	(See note 10)	10,000
Minimum:														
C Telep:	5.7/11.4	---	---	---	---	---	---	---	---	---	---	---	---	---
C Teleg:	5.7/11.4	---	---	---	---	---	---	---	---	---	---	---	---	---
TEST CONDITIONS:	6.3/12.6	600	adjust	250	--	---	40	---	---	---	---	---	---	---

HEIGHT: 4-5/16 in. Max, 3-15/16 in. Min

DIAMETER: 1-15/16 in max

PIN NO.:	1	2	3	4	5	6	7
ELEMENTS:	f	2gl	g2	k int sd	f hct	lgl	f

ENVELOPE: See figure 1.

PAR. NO.	TEST	CONDITIONS	SYM.	LIMITS MIN	LIMITS MAX	UNITS
	General					
3.1	Qualification	Required	---	---	---	---
3.6	Performance	(See note 1)	---	---	---	---
4.5	Holding period	t = 72 hours	---	---	---	---
	Qualification inspection (See note 2)					
4.9.19.1	Low-frequency vibration	F = 50 cps; Amp = .040 in.; t = 900; No voltage	---	---	---	---
3.4.3	Base connections		---	---	---	---
---	Cathode	Oxide coated	---	---	---	---
	Acceptance inspection part 1 (production)					
4.10.8	Heater current	Ef = 6.3 V; t = 300	If	1.6	2.0	A
4.10.4.3	Screen-grid current	(See note 3)	Ic2	---	6	mAdc
4.10.5.2	Grid voltage	(See note 3)	Ecl	-19.0	-27.0	dc
4.10.6.1	Total grid current	(See note 3); t = 180	Icl	---	-6	uAdc
4.10.1.3	Peak emission	eb = ecl = ec2 = 225v (See note 5)	is	1.8	---	a

CV2797

PAR. NO.	TEST	CONDITIONS	SYM.	LIMITS MIN	LIMITS MAX	UNITS
	Acceptance inspection, part 2 (design)					
4.9.19.3	Bump	Angle 30°	---	---	---	---
4.9.19.1	Low frequency vibration	Eb = 250 Vdc; Ecl/Ib = 10 mAdc; Rp = 2000 (See note 3)	Ep	---	800	mVac
4.10.11.1	Amplification factor	(See notes 3 and 6)	Mu	6.7	9.6	
4.10.2.2	Power output Class C amplifier (1)	F = 250 Mc Eb = 600 Vdc Ib = 200 mAdc max Ic1 = 5 mAdc Ec2 = 250 Vdc max Ic2 = 25 mAdc max Rg = 10,000-20,000Ω (See notes 7 and 9)	Po	75	---	W
4.10.2.2	Power output Class C amplifier (2)	F = 460-490 MC Eb = 500 Vdc Ib = 200 mAdc max Ic1 = 6 mAdc max Ec2 = 250 Vdc max Ic2 = 25 mAdc max Rg = 10,000 - 25000Ω (See notes 7 and 9)	Po	50	---	W
4.10.14	Interelectrode capacitance	(See note 4)	Cgp Cin Cout	0.05 9.40 2.60	0.08 11.60 3.70	uuf uuf uuf
	Acceptance inspection part 3 (life)					
4.11	Life test (500 hours)	Class "C" amplifier (1) Group C	---	---	---	---
4.11.4	Life test end point (500 hours)	Total grid current Power output Peak emission	Ic1 Po is	--- 70 1.4	-100 --- ---	uA W a
4.9.18	Container drop	Required				
Section 5	Preparation for delivery	(See note 11)				

NOTES:

1. In addition to the paragraphs specified hereon, the following tests and requirements listed in 3.6 shall apply: 3.3, 3.3.1, 3.4.1, 3.4.2, 3.4.3, 3.7, 3.7.7, 3.8, 4.1, 4.3, 4.4, 4.5, 4.6, 4.7, 4.8, 4.9, 4.9.1, 4.9.2, 4.9.4, 4.9.8, 4.9.21.

2. All tests listed hereon shall be performed during qualification inspection; however, these tests are normally performed during qualification inspection only.

3. Read each unit separately. Control grid of unit not under test shall be connected -100 volts.

4. Duplicate test on each unit separately; tie unit not under test to ground.

5. Both units connected in parallel.

6. Screen grid mu is determined by measuring grid voltage required to adjust plate current for grid 2 voltages of 250 and 200 volts.

$$Mu = 50/\Delta Ec1$$ at Eb=600 Vdc, Ib=40 mAdc

NOTES: (Cont'd)

7. Power Output is total power at drive frequency delivered to load. Drive power is not subtracted from total output.

8. For carrier condition with plate and screen modulation, screen grid dissipation rating is 4.5 Watts. With plate modulation only, screen grid dissipation rating is 7 Watts.

9. Output circuit adjusted so that anode dissipation does not exceed 2x20 Watts.

10. T anode seal maximum 200°C.
T bottom seal maximum 180°C.

11. Tubes shall be packaged and packed as specified in the contract or order, in accordance with specification MIL-E-75 and appendix thereto.

12. Reference specification shall be of the issue in effect on the date of invitation for bids.

Custodians:
Army - EL
Navy - Ships
Air Force - ASD

Preparing Activity:
Navy - Ships

(Project No. 5960-1582)

CV2797

REF	DIMENSIONS
A	4 1/8 ± 3/16
B	1 15/16 MAX
C	1 13/16 MAX
D	.275
E	.080 ± .003
F	.475 MIN
G	.000 MIN
H	.375 MIN .500 MAX
I	.058 DIA ± .003 6 PINS
J	.125 DIA ± .003
K	1.000
L	51°
M	52°
N	26°

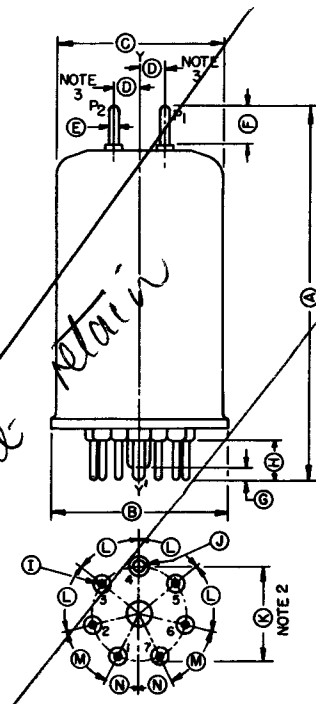

Deleted by ALI. but retain

NOTES:

1. The axis Y-Y' is defined as the axis of the base pin gage described in note 2.
2. The tube base shall be capable of entering to a distance of 0.375" a flat-plate gage having six holes 0.800" ± 0.0005" and one hole 0.1450 ± .0005" all arranged on a 1.0000" ± 0.0005" circle at the angles ±5' specified on the outline. A 0.500 " ±.010" diameter hole at the center of the pin circle is also required. The axis Y-Y' is defined by the center of this hole.
3. The plate leads shall be capable of entering a flat plate gage of .375" ± .001" thickness having two holes .1400" ± .0005" in diameter spaced .275 ± .001 from a point coincident with the axis Y-Y'. The axis of the holes shall be parallel to Y-Y' and the plane of these axis shall be 90° ±5' from the plane through Y-Y' and pin no. 4.

Figure 1. Outline drawing.

POSITION OF ANODE PINS IN SPACE. THEY SHALL BE WITHIN TWO CIRCLES 6mm DIA., WHOSE CENTRES ARE EACH 7mm EITHER SIDE OF THE ℄ OF THE VALVE BASE ON A PLANE 90° ± 5' TO THE PLANE THROUGH THE CATHODE PIN AND ℄ OF THE VALVE.

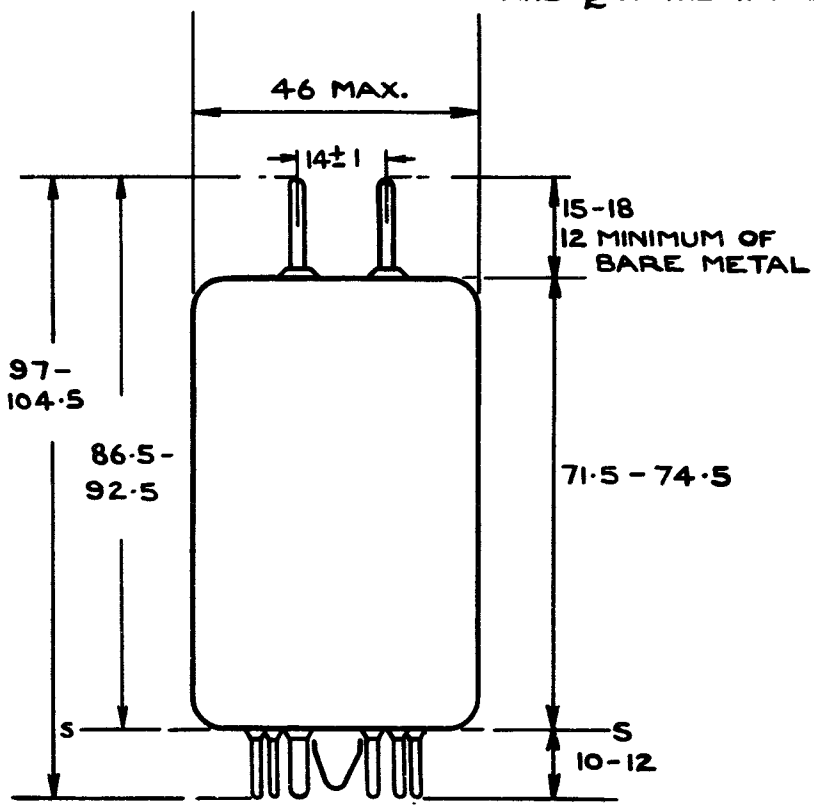

NOTES.

1. SEALING-OFF PIP TO BE SHORTER THAN PIN LENGTH.
2. ANY GLASS ON THE PINS SHALL NOT EXTEND MORE THAN 3 mm FROM THE SOLE SS.
3. DIAMETER OF PINS 1,2,3,5,6 & 7 TO BE 1·33 TO 1·52 mm.
4. DIAMETER OF PIN 4 TO BE 3·10 TO 3·25.
5. DIAMETER OF ANODE PINS TO BE 2 ± ·05 mm.
6. THE PINS SHALL BE ACCEPTED BY THE PIN POSITION GAUGE IN B.S. 448, SECTION B7A TO WITHIN 1mm. OF THE SOLE SS.

ALL DIMENSIONS ARE IN MILLIMETRES.

VALVE ELECTRONIC

ADMIRALTY SURFACE WEAPONS ESTABLISHMENT

CV 2797

Specification AD/CV2797 incorporating MIL-E-1/152A Issue 3 Dated 10.12.64 To be read in conjunction with K1006 BASE B.S 448 [B1A.	SECURITY Specification: Unclassified Valve: Unclassified

TYPE OF VALVE - R.F. Power Double Beam-Tetrode CATHODE - Indirectly Heated ENVELOPE - Glass PROTOTYPE - QQV06-40 robust version	MARKING See K1001/4

RATING, BASE AND CONNECTIONS

See Specification MIL-E-1/152A

DIMENSIONS

As in MIL-E-1/152A except as follows:-

Maximum overall length 104.5 mms
Maximum diameter 46.0 mms

JOINT SERVICES CATALOGUE NO.

5960-99-000-2797

[redacted] shown in MIL-E-1/152A shall apply with the following ex[redacted]:-

(a) Acceptance Inspection Part 2 (Design)

(i) Power Output, Class C Amplifier (1)

The following test may be applied as an alternative:-

With F = 300 Mc/s, Eb = 400V d.c., Ib = 200 mA d.c. max., Ec2 = 250V d.c. max., Ec1 = -60V d.c. the Power Output shall be 35W min., Total Ig1 shall be 2 mA min., 8 mA max., Total Ig2 shall be 18 mA max.

(ii) Power Output Class C Amplifier (2)

This test may be omitted.

above shall be 35W min.

(ii) As Class C amplifier under the conditions of test (b)(i) above, The end point power output shall be 35W min."

MINISTRY OF SUPPLY - D.L.R.D./R.A.E.

VALVE ELECTRONIC **CV2798**

Specification MOS(A)/CV2798	SECURITY	
	Specification	Valve
Issue 1 Dated 1.6.57.	UNCLASSIFIED	UNCLASSIFIED
To be read in conjunction with B.S.448, B.S.1409 and K.1001		

TYPE OF VALVE - R.F. Power Double Tetrode

CATHODE - Indirectly Heated

ENVELOPE - Glass, unmetallised

PROTOTYPE - QQV03-10

MARKING

See K.1001/4

BASE

B.S. 448/B9A

RATING
(All limiting values are absolute)

			Note
Heater Voltage (parallel)	(V)	6.3	
Heater Current (parallel)	(A)	0.84	
Heater Voltage (series)	(V)	12.6	
Heater Current (series)	(A)	0.42	
Max. Operating Anode Voltage	(V)	300	
Max. Operating Screen Voltage	(V)	200	
Max. Anode Dissipation	(W)	5	B,C,D
Max. Screen Dissipation	(W)	1.0	C
Max. Grid Dissipation	(W)	0.2	C
Max. Negative Grid Voltage	(V)	150	
Max. D.C. Cathode Current	(mA)	50	C
Max. Peak Cathode Current	(mA)	225	C
Max. Intermittent Peak Cathode Current with A.M.	(mA)	360	C
Max. Heater - Cathode Voltage	(V)	100	
Max. Operating Frequency	(Mc/s)	225	

CONNECTIONS

Pin	Electrode	
1	Grid (1)	g'1
2	Cathode	k
3	Grid (2)	g"1
4	Heater	h
5	Heater	h
6	Anode (1)	a'
7	Screen (Com)	g2
8	Anode (2)	a"
9	Heater C.T.	h (tap)

DIMENSIONS

Dimensions (mm)	Min.	Max.
A seated height	-	71.5
C diameter	-	22.2
D overall length	-	78.5

CAPACITANCES (pF)

C in	6.2	C,D
C out	2.7	C,D
C in (both sections in push pull)	5.0	A,D
C out (both sections in push pull)	1.5	A,D

MOUNTING POSITION

Any, but when mounted horizontally pins 2 and 7 should be in a Vertical plane.

NOTES

A. The valve is internally neutralized for push-pull operation

B. Cooling is by radiation and convection; maximum bulb temperature = 225°C; maximum temperature of pins = 120°C.

C. Per section.

D. Without screen.

CV2798

TESTS

To be performed in addition to those applicable in K1001

	Test Conditions					Tests	Limits Min.	Limits Max.	No. Tested	Note
a	Measured on a 1 Mc/s bridge with valve mounted in a fully shielded holder. Valve not screened					CAPACITANCES (pF)				
						C in	5.7	6.7	6 per week	1
						C out	2.35	3.6		
						Ca, gl	-	0.08		
						Ca', g"1	-	0.08	6 per week	
						Ca", g'1	-	0.08		
						Cg1', g"1	1.8	2.2		
						Ca', a"	0.08	0.12		
b	Vh (V)	Va (V)	Vg2 (V)	Vg1 (V)	Ia (mA)					
	6.3	0	0	0	0	Heater Current (A)	0.78	0.88	100% or S	
c	6.3	150	150	Adjust	40	Reverse Grid Current (μA)	-	1.3	100%	1,2
d	6.3	200	200	-45	-	Anode Current (1) (mA)	-	1.5	100%	3
e	6.3	200	200	-15	-	Anode Current (2) (mA)	13	62	100%	3
f	6.3	200	200	Adjust	30	Screen Current (mA)	-	5.0	100%	3
g		See K1001/5.3 except ± 100V shall be applied between heater and cathode.				Heater Cathode Leakage (μA)	-	40	100%	
h	6.3	300	200	Adjust	75	Power out at 150 Mc/s (W)	10	-	20 per week	4

NOTES

1. Per section
2. Read after 3 minutes operation
3. Test each section separately, the other section being biassed to -100V negative.
4. Rgl variable between 5 K.ohms and 55 K.ohms. A typical circuit diagram is shown on page 3.

CV2798

POWER OUTPUT TEST CIRCUIT.

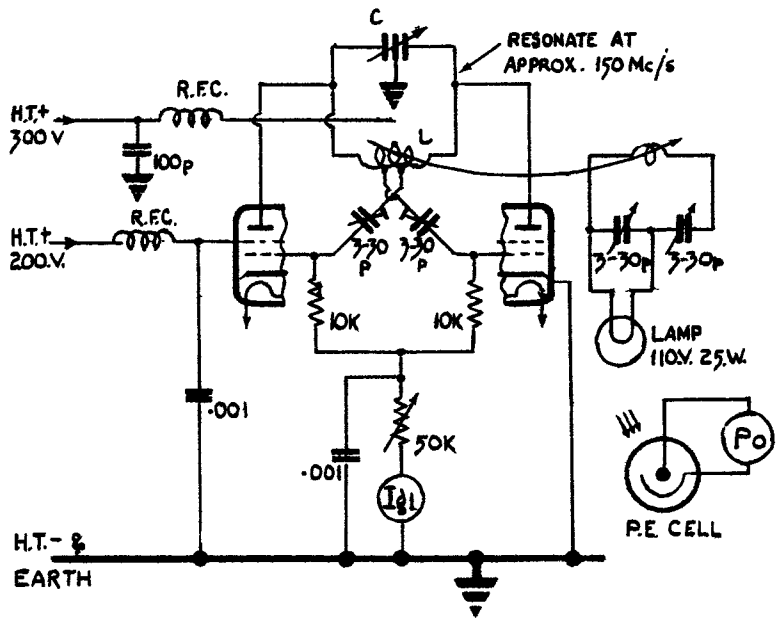

NOTE. TEST CONDITIONS ARE :-

I_a = 75mA, I_{g2} = 3-4 mA. AVERAGE

I_{g1} = 2 mA AVERAGE, V_f = 6·3.

Po = 10 WATTS MINIMUM

R_{g1} = 5-50K.

MINISTRY OF AVIATION, (D.L.R.D./R.A.E.)

VALVE ELECTRONIC **CV2799**

SPECIFICATION M.O.A./CV.2799 ISSUE 4. DATED 1.8.62. To be read in conjunction with BS.448, BS.1409 and K1001	SECURITY Specification: UNCLASSIFIED Valve: UNCLASSIFIED

→ Indicates a change

TYPE OF VALVE - Double R.F. Beam Tetrode
CATHODE - Indirectly Heated
ENVELOPE - Glass, unmetallised
PROTOTYPE - QQV03-20

MARKING
See K.1001/4

RATINGS (All limiting values are absolute)			Notes
Heater Voltage	(V)	2 x 6.3	
Heater Current	(A)	2 x 0.65	
Max. Anode Voltage	(V)	600	
Max. Neg. Grid Voltage	(V)	200	
Max. Grid Dissipation	(W)	2 x 0.5	
Max. Screen Voltage	(V)	250	
Max. Screen Dissipation	(W)	2 x 1.5	
Max. Anode Dissipation	(W)	2 x 10	
Max. Cathode Current	(mA)	2 x 55	
Max. Peak Cathode Current	(mA)	2 x 275	
Max. Intermittent Peak Cathode Current for A.M.	(mA)	2 x 400	
Max. Grid (Circuit) Resistance	(k.Ω)	100	
Max. Temperature of Pins	(°C)	180	A

BASE
BS.448/B7A

CONNECTIONS

Pin	Electrode
1	h
2	$g1''$
3	g^2 (common)
4	k
5	h (tap)
6	$g1'$
7	h
TC1	a'
TC2	a''

CAPACITANCES (p^F)		
C in (nom. per section)	6.2	
C out (nom. per section)	2.2	
$Cg1'$ - $g1''$ (nom.)	0.75	
Ca' - a'' (nom.)	0.085	

DIMENSIONS
See Drawing on Page 4

MOUNTING POSITION
Any

NOTES

A. Natural cooling is sufficient with

Va = 600V at frequencies up to 150 Mc/s
Va = 500V at frequencies up to 200 Mc/s
Va = 300V at frequencies up to 430 Mc/s
Va = 250V at frequencies up to 600 Mc/s

} These voltage limits may be exceeded provided that the seal temperature is kept below the permitted maximum limit by a directed flow of air on the top of the bulb.

B. The Joint Services Catalogue No. is 5960-99-000-2799.

CV2799

To be performed in addition to those applicable in K1001

Test Conditions:- Unless otherwise stated

Vh (V)	Va (V)	Vg2 (V)	
6.3	300	250	Note 1

K1001 Ref.	Test	Test Conditions	AQL %	Insp. Level	Symbol	Limits MIN	Limits MAX	Units
	Group A							
	Reverse Grid Current	Adjust Vg1 for Ia = 40mA each section. Note 6	-	100%	-Ig1	-	1	µA
	Anode Current (1)	Vg1 = -12V Note 5	-	100%	Ia(1)	40	92	mA
	Screen Current	Adjust Vg1 for Ia = 40mA Note 5	-	100%	Ig2	-	8	mA
	Anode Current (2)	Vg1 = -35V Note 5	-	100%	Ia(2)	-	2.5	mA
	Group B							
	Heater Current		0.65	II	Ih	1.2	1.5	A
	Heater Cathode Leakage Current	Vhk = ±100V	0.65	II	Ihk	-	40	µA
	Group C Omitted							
	Group D							
	Power Output (600 Mc/s)	Va = 400V. Vg1 = -50V Ia = 2 x 50mA Note 3	-	T.A.	P.out	16	-	W
	Power Output (400 Mc/s)	Va = 400V. Vg1 = -50V Ia = 2 x 50mA Notes 8 and 9	-	T.A.	P.out	18	-	W
	Power Output (200 Mc/s)	Va = 600V. Vg1 = -60V Ia = 2 x 50mA Notes 2 and 7.	2.5	IC	P.out	33	-	W
	Power Output (200 Mc/s)	Vh = 5.5V Va = 600V Vg1 = -60V Ia = 2x50mA Notes 4 and 7	2.5	I	P.out	30	-	W
AIII	Capacitances	To be performed on a 1 Mc/s R.F. bridge in a fully shielded socket. Top cap connections to be screened.						
		Note 10	-	TA	C'in	5.7	6.7	pF
				TA	C"in	5.7	6.7	pF
				TA	C'out	1.7	2.7	pF
				TA	C"out	1.7	2.7	pF
				TA	Ca'a"	0.07	0.14	pF
				TA	Cg1'g1"	0.70	0.80	pF

(Ah.1)

CV2799

TESTS (Contd.)

K1001 Ref.	Test	Test Conditions	AQL %	Insp. Level	Symbol	Limits MIN	Limits MAX	Units
			2.5	IC	Ca'gl'	-	0.065	pF
			2.5	IC	Ca"gl' (neutralizing)	-	0.065	pF
			2.5	IC	Difference (Ca'gl' -Ca"gl')	-	0.015	pF
			2.5	IC	Ca"gl"	-	0.065	pF
			2.5	IC	Ca'gl" (neutralizing)	-	0.065	pF
			2.5	IC	Difference (Ca"gl" -Ca'gl")	-	0.015	pF
	Gold Plating Adhesion Test	The sample shall be submitted to the climatic test specified in K1001 Clauses 10.1 and 10.2 [illegible]2. (AL1)	-	[illegible] SEE NOTE 11 (AL1)	-	-	-	-

Notes

1) Readings to be made after a minimum of 3 minutes operation.

2) This limit assumes a circuit transfer efficiency of 80%.

3) At a circuit transfer efficiency of 80% i.e. Power Output = 20 W.min.

4) Underheat for a minimum period of 3 minutes before checking output.

5) Test each section separately, the remaining section to be biased to -100V.

6) Read -Ig1 immediately after 3 minutes heating.

7) Ig2 must be between 5 and 15mA.

8) Ig1 = 4mA max. Ig2 = 9mA max.

9) At a circuit transfer efficiency of 78% i.e. Power Output = 23 W.min.

10) The Capacitance connections to be:-

Test	HP	LP	E
C'in	6	1,3,4,5,7,C	TC1, TC2, 2
C"in	2	1,3,4,5,7,C	TC1, TC2, 6
C'out	TC1	1,3,4,5,7,C	2,6, TC2
C"out	TC2	1,3,4,5,7,C	2,6, TC1
Ca'a"	TC1	TC2	1,2,3,4,5,6,7,C
Cg1'g1"	6	2	1,3,4,5,7,TC1,TC2,C
Ca'g1'	TC1	6	1,2,3,4,5,6,7,TC2,C
Ca"g1'	TC2	6	1,2,3,4,5,7,TC1,C
Ca"g1"	TC2	2	1,3,4,5,6,7,TC1,C
Ca'g1"	TC1	2	1,3,4,5,6,[illegible],C

"Three valves from each 100 valves pro[illegible]all be tested, electrical rejects may be [illegible]. ~~e inspected for corrosion~~ he batch shall be acceptable provided not more ~~batch shall be acceptable~~ than two pins from the sample of three valves (A14) are rejectable".

C.V. 2799

OUTLINE DRAWING

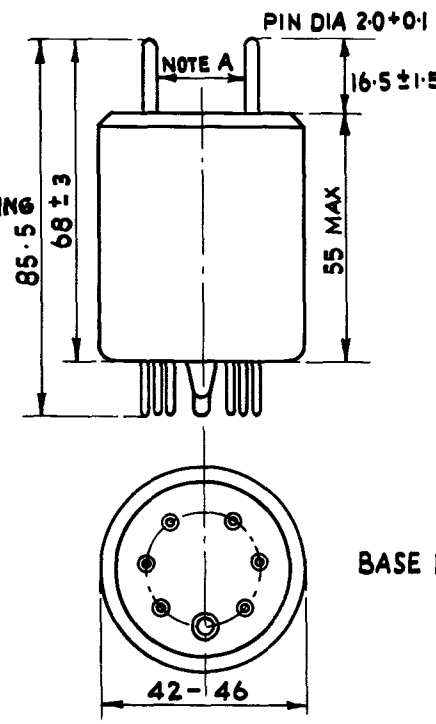

ALL PINS SHALL BE GOLD PLATED. SEE GOLD PLATING ADHESION TEST ON PAGE 3

NOTE
CHECK WITH PIN SPACING GAUGE BELOW

BASE BS 448/B7A

PIN SPACING GAUGE

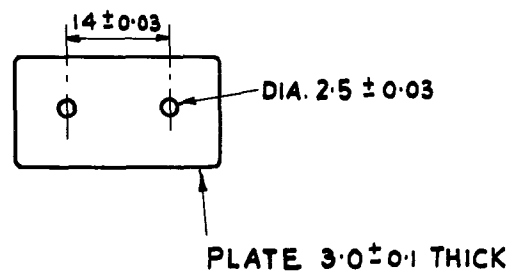

ALL DIMENSIONS IN m.m.s.

GENERAL AMENDMENT NO.5

TO

SPECIFICATIONS CV4001 TO CV4084 (inclusive)

1. This Amendment applies to all valves from CV4001 to CV4084 inclusive which have B7G/F or B9A/F bases and are specified in relation to K1001.

2. At the discretion of the manufacturer the Inspection of the bases and dimensions of these valves may be made to the appropriate parts of B.S.448.

3. In due course the individual Specifications will be amended to call up the appropriate parts of B.S.448 instead of K1001.

T.V.C. Office

July, 1962

NB. General Amendments No. 1 to 4 covered Specifications CV4001 to CV4065 only.

(40639)

MINISTRY OF AVIATION, D.L.R.D./R.A.E.

VALVE ELECTRONIC **CV2975**

SPECIFICATION M.O.S./CV.2975	SECURITY	
	SPECIFICATION	VALVE
Issue No.1 Dated 1.1.60.	Unclassified	Unclassified
To be read in conjunction with K.1006 and BS.448.		

TYPE OF VALVE: Output Pentode.
CATHODE: Indirectly heated.
ENVELOPE: Glass.
PROTOTYPE: EL.84.

MARKING

K.1001/4

BASE

BS.448/B9A.
(E9-1, Miniature button 9 pin.)

RATINGS
(All limiting values are absolute)

Heater Volts	(V)	6.3
Heater Current	(A)	0.76
Max. Anode Voltage	(V)	330
Max. Anode Dissipation	(W)	13
Max. Screen Voltage	(V)	330
Max. Screen Dissipation (zero signal)	(W)	2.2
Max. Cathode Current	(mA)	72
Max. Heater Cathode Voltage	(V)	100

CONNECTIONS

Pin	Electrode	
1	Internal Connection	IC
2	Control Grid	g1
3	Cathode + Suppressor	k+g3
4	Heater	h
5	Heater	h
6	Internal Connection	IC
7	Anode	a
8	Internal Connection	IC
9	Screen Grid	g2

TYPICAL OPERATING CONDITIONS

	Single Valve Class "A" Amplifier		Two Valves Class "AB" Push-Pull		
	Pentode Connections				Notes
Va (V)	250	Va (V)	300		
Vg2 (V)	250	Vg2 (V)	300		
Vg1 (V)	-7.3	Rk (Ω)	130		
Ia (mA)	48	Ia (mA)	72		1,4
Ig2 (mA)	5.5	Ig2 (mA)	8		2,4
gm (mA/V)	11.3	RL (kΩ)	8		
RL (kΩ)	4.5	Pout (W)	17		
Pout (W)	4.7				
Esig (VAC)	4.4				

DIMENSIONS

See BS.448/B9A/2.1
Size Ref. No.4.

Dimensions mm	Min.	Max.
A Seated height	-	71.5
C Diameter	19.0	22.2
D Overall length	-	78.5

CAPACITANCE (pF) Note 3

Cag (max.)	0.5
Cin (nom.)	10.8
Cout (nom.)	6.5

MOUNTING POSITION

Any.

PACKAGING

See K.1005.

NOTES

1. Anode current = 36 mA per valve.
2. Screen current = 4 mA per valve.
3. Valve unscreened.
4. Zero signal value.

TESTS

TEST CONDITIONS	Ef (V)	Eb (V)	Ec2 (V)	Ec1 (V)
	6.3	250	250	-7.3

Height: $3^3/32$" max. overall. **Diameter:** $^7/8$" max.
Base: E9-1, miniature button 9-pin. **Cathode:** Coated unipotential.
Envelope: $T6^1/2$-(6-4)

Pin No.	1	2	3	4	5	6	7	8	9
Element	i.c.	g1	kg3	h	h	i.c.	a	i.c.	g2.

K.1006 Ref.	Test	Test Conditions	AQL %	Insp. Level	Symbol	LIMITS Min.	LIMITS Max.	Units
	GROUP A							
4.10.6.1	Reverse Grid Current	Rg1 = 500kΩ max.	-	100%	-Ig1	-	1.5	μA
	Electrode Insulation	Ef = 6.3V. Note 2						
		Ec1-all = -100V.		100%	R	10	-	MΩ
		Ec2-all = -300V.		100%	R	10	-	MΩ
		Ea-all = -300V.		100%	R	10	-	MΩ
	GROUP B	Combined AQL	1.0					
4.10.8	Heater Current		0.65	II	If	690	830	mA
4.10.15	Heater-Cathode Leakage Current	Ehk = 100V. k positive. Note 1.	0.65	II	Ihk	-	40	μA
4.10.4.1	Plate Current	Note 3.	0.65	II	Ib	35	70	mA
4.10.4.3	Screen Current		0.65	II	Ic2	2.0	8.5	mA
4.10.9	Transconductance		0.65	II	Sm	8200	14400	μmhos
	GROUP C	Combined AQL	4.0					
4.10.1.1	Emission	Eb=Ec1=Ec2=40Vac.	2.5	I	Is	130	-	mA
4.10.16	Power Output	Esig = 4.7Vac. Rp = 5kΩ.	2.5	I	Po	4.4	-	W
	GROUP D							
4.10.14	Capacitance	Valve unscreened	6.5	IC	Cgp	-	0.5	pF
					Cin	9.7	11.9	pF
					Cout	5.5	7.5	pF
	GROUP F							
4.11.4	Life Test	Ehk = 100V.d.c. k positive. Rg1 47kΩ Rk = 150Ω		Group A				
4.11.4	Life Test End Point (500 hours)							
4.10.16	Power Output	As in Group C.	2.5	-	Po	3.0	-	W

NOTES

1. 1MΩ protective resistance in series.
2. Heater strapped to cathode and considered as a single electrode.
3. The limits for Ia are asymmetrical. Bogey Ia = 48mA.

Replacement for CV391 & CV428.

MINISTRY OF [redacted] TECHNOLOGY (DLR) REC.

VALVE ELECTRONIC **CV 3523**

Specification [redacted] HINTECH/CV3523.

→ [redacted]

Issue 2 dated 26th February 1957

To be read in conjunction with K1006.

SECURITY	
Specification	Valve
UNCLASSIFIED	UNCLASSIFIED

→ indicates a change

TYPE OF VALVE - VHF Beam Power Amplifier
CATHODE - Indirectly-heated
ENVELOPE - Glass
PROTOTYPE - 6146

RATING

			Note
Heater Voltage	(V)	6.3±10%	
Heater Current	(A)	1.25	
Max Anode Voltage	(V)	600	
Max Anode Current	(mA)	140	
Max Grid Voltage	(V)	-150	
Max Grid Current	(mA)	3.5	
Max Screen Grid Voltage	(V)	250	
Max Anode Dissipation	(W)	20	
Max Screen Grid Dissipation	(W)	3.0	
Max Peak Heater-cathode Voltage	(V)	±135	
Max Cathode Current	(mA)	160	
Max Grid-cathode Resistance	(ohms)	30,000	B

MARKING

K1001/4
Add: 6146

BASE

Octal
BS.448 : B8-0
(Large Wafer Octal 8-pin Phenolic with Sleeve)

See K1001/4 (Issue 2) for DIMENSIONS (NO DRAWING) 1.900 INCHES

CONNECTIONS

Pin	Electrode	
1	Cathode (Note C)	k,s,g3
2	Heater	h
3	Screen Grid	g2
4	Cathode (Note C)	k,s,g3
5	Control Grid	g1
6	Cathode (Note C)	k,s,g3
7	Heater	h
8	Base Sleeve	-
TC	Anode	a

TOP CAP

CT2
BS.448 : 6/1.2
(American Small, C1-1)

DIMENSIONS

Dimension (ins)	Min.	Max.
Overall length	3 9/16	3 13/16
Diameter	-	1 23/32
Seated height	3	3 1/4

MOUNTING POSITION

Any

NOTES

A. All limiting values are absolute

B. At reduced input Rg1,k = 100k max.

C. Pins 1, 4 and 6 are also connected to an internal shield and suppressor.

CV3523

MIL-E-1/380B
23 December 1955
SUPERSEDING
MIL-E-1/380A
3 May 1954

INDIVIDUAL MILITARY SPECIFICATION SHEET

ELECTRON TUBE, RECEIVING, BEAMPOWER AMPLIFIER, TYPE

JAN-6146

This specification sheet forms a part of the latest issue of Military Specification MIL-E-1.

F1 = 60Mc (Note 1)
F2 = 175Mc (Note 1)

Description: VHF Beam Power Amplifier

Ratings: Absolute Maximum:	Ef V	Eb Vdc	Ec1 Vdc	Ec2 Vdc	ib mAdc	Ic1 mAdc	Pp W	Pg2 W	Pi W	Ehk V	Modulation	Alt ft
AB1 AF	6.3±10%	600	---	250	125	---	20	3	60	±135	---	10,000
AB2 AF	6.3±10%	600	---	250	125	---	20	3	62.5	±135	---	10,000
C Telep.	6.3±10%	480 Note 1	-150	250	117	3.5	13.3	2	45 Note 1	±135	Plate	10,000
C Teleg.	6.3±10%	600 Note 1	-150	250	140	3.5	20	3	67.5 Note 1	±135	---	10,000
Test Cond.:	6.3	300	---	200	---	---	---	---	---	---	---	---

*Height: 3-9/16 in. min.;3-13/16 in. max.
**Base: Large Wafer Octal 8 Pin, Phenolic with Sleeve
**Diameter: 1-23/32 in. max.
**Cap: Small Cl-1

**Pin No.:	1	2	3	4	5	6	7	8	Cap
Element:	k int sd g3	h	g2	k int sd g3	gl	k int sd g3	h	Base Sleeve	p

**Cathode: Coated Unipotential
**Envelope: T-12 as per outline

For miscellaneous requirements, see Paragraph 3.3, Inspection Instructions for Electron Tubes.

Ref.	Test	Conditions		Min.	Max.	
3.1	Qualification Approval:	Required for JAN Marking				
4.9.18.1.1	Carton Drop:	(d) Package Group 1; Carton Size E				
4.9.19.1	*Vibration:	Eb=250Vdc;Ecl/Ib=10mAdc; RL=2000	Ep:	---	750	mVac
4.10.8	*Heater Current:		If:	1.175	1.325	A
4.10.15	*Heater-Cathode Leakage:		Ihk:	---	100	uAdc
4.10.6.1	Grid Current:	Ecl/Ib=67mAdc;t=120	Ic:	---	-5	uAdc
4.10.4.1	Plate Current(1):	Ecl=-33Vdc	Ib:	46	94	mAdc
4.10.4.1	*Plate Current(2):	Ecl=-70Vdc	Ib:	0	2	mAdc
4.10.4.3	Screen Current:	Ecl=-33Vdc	Ic2:	0	5.5	mAdc
4.10.9	*Transconductance:	Eb=200Vdc;Ecl/Ib=100mAdc	Sm:	5600	8400	umhos
4.10.2.2	*Power Oscillation:	Eb=600Vdc;Ec2=180Vdc; Ib=112mAdc max.;Rgl=30,000; Icl=2.0-2.5mAdc;F=15Mc; Note 2	Po:	47	---	W
4.10.1.1	Emission:	Eb=Ecl=Ec2=20Vdc	Is:	110	---	mAdc

CV3523

Ref.	Test	Conditions		Min.	Max.	
4.10.14	*Capacitance:	No Shield, Base sleeve tied to cathode	Cgp:	---	0.22	uuf
		No Shield, Base sleeve tied to cathode	Cin:	11.5	16.5	uuf
		No Shield, Base sleeve tied to cathode	Cout:	7.0	11.C	uuf
4.11	Life Test(1):	Group C;Eb=500Vdc; Ecl/Ib=40mAdc	t:	500	---	hrs
4.11	Life Test(2):	Group D;Eb=400Vdc, Ib=260mAdc;Icl=4.0-5.0mAdc; F=125Mc;Rgl=15,000; Note 3	t:	500	---	hrs
4.11.4	Life Test End Points(1) and (2):	Emission	Is:	90	---	mAdc
		Power Oscillation	Po:	42	---	W

Note 1: See Plate Voltage and Input Chart.

Note 2: Po shall be useful power output.

Note 3: Test in a self-excited push-pull oscillator circuit. Current and Grid Resistance Values specified are for two tubes.

Note 4: Reference specification shall be of the issue in effect on the date of invitation for bid.

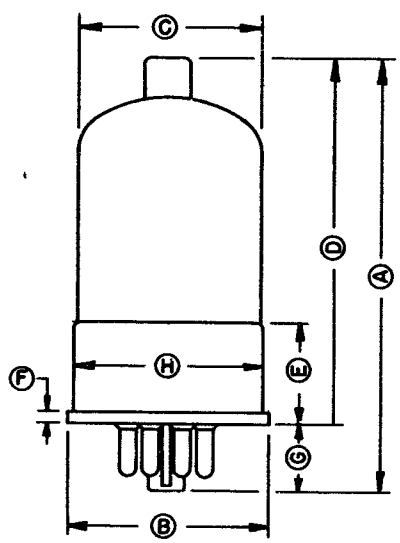

REF	DIMENSION
A	3 9/16 MIN 3 9/16 MAX
B	1 23/32 MAX
C	1 9/16 MAX
D	3 MIN 3 1/4 MAX
E	.770
F	.100
G	.560 MAX
H	1.600 MIN 1.650 MAX

PLATE VOLTAGE AND PLATE INPUT VS FREQUENCY
FOR TYPE 6146

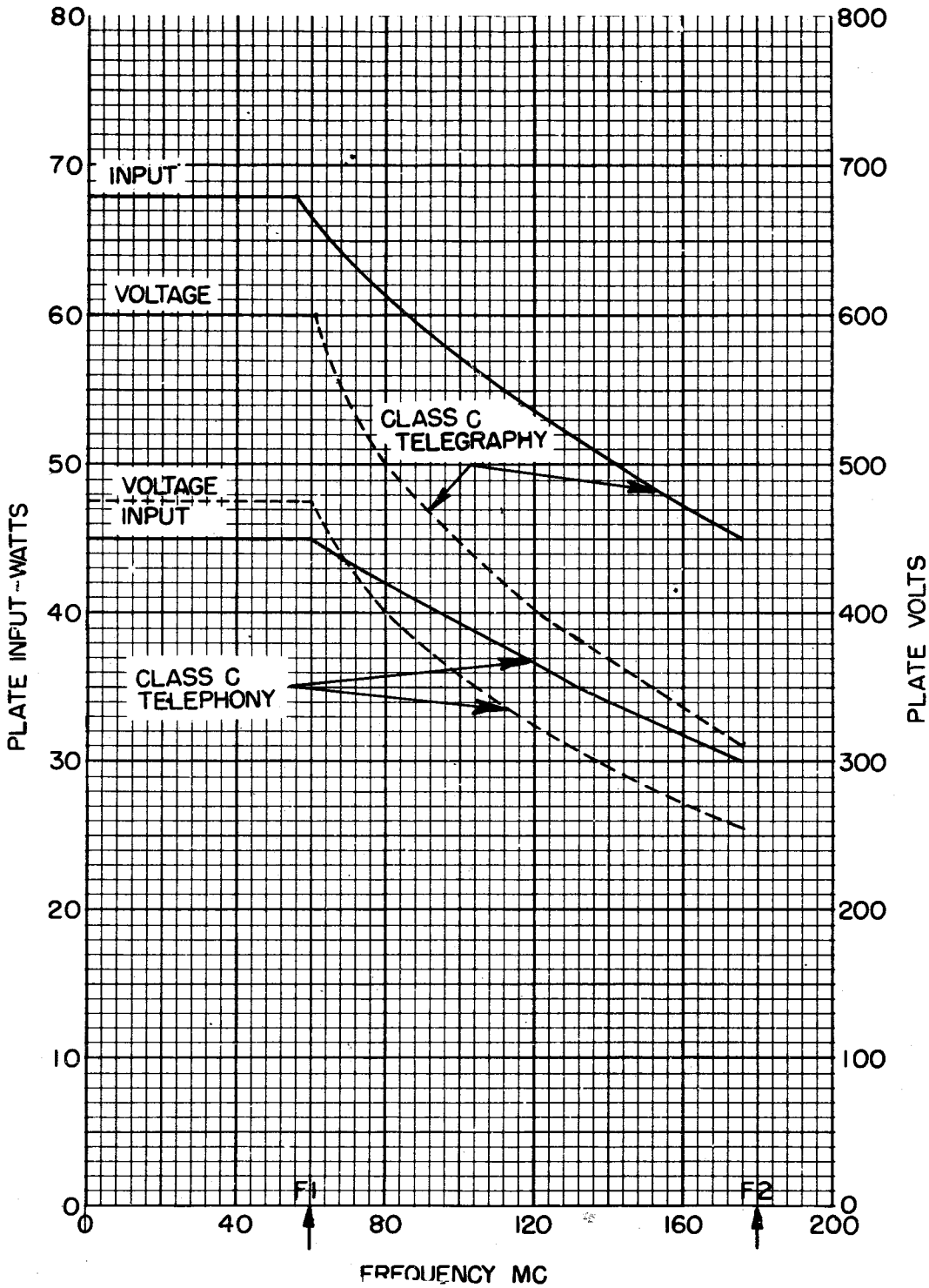

VALVE ELECTRONIC

SERVICES VALVE TEST LABORATORY

CV 3629

Specification AD/CV.3629 incorporating MIL-E-1/111B

Issue No. 2 dated 4.8.61.

To be read in conjunction with K1006.

SECURITY	
SPECN.	VALVE
Unclassified	Unclassified

TYPE OF VALVE	Hydrogen thyratron modulator
CATHODE	Unipotential
ENVELOPE	Glass
PROTOTYPE	6130

MARKING

See K1001/4

Additional marking 6130.

BASE

See K1001/AIV/D4.8/A4-9

Medium 4 pin low loss phenolic

RATINGS

			NOTE
Heater voltage nominal	(V)	6.3	
Heater current nominal	(A)	2.25	
Max. peak anode voltage	(kV)	3	A
Max. peak inverse anode voltage	(kV)	3	A
Max. peak inverse grid voltage	(V)	200	
Min. trigger voltage	(V)	175	A
Max. peak anode current	(A)	35	
Max. mean anode current	(mA)	45	
Max. rate of rise anode current	(A/μS)	750	
Max. value of product (peak anode volts) x (peak anode current) x prf	(V.A. pps)	0.3×10^9	
Min. cathode heating time	(mins)	2	
Max. ambient temperature	(°C)	90	
Max. Altitude	(ft)	50,000	

CONNECTIONS

Pin	Electrode
1	Heater
2	Cathode
3	Grid
4	Heater + Cathode
T.C.	Anode

TOP CAP

See K1001/A1/D5.1

BSS.448 ref. CT2. with skirt

DIMENSIONS (ins)

	Min.	Max.
Height	$4\frac{13}{16}$	$5\frac{3}{16}$
Diameter	-	$1\frac{9}{16}$

MOUNTING POSITION

Any

NOTES

A. For further details see Notes 1, 2 and 3 of MIL-E-1/111B.

CV 3629

MIL-E-1/111B
14 May 1956
SUPERSEDING
MIL-E-1/111A
20 May 1953
MIL-E-1/138
30 March 1953

INDIVIDUAL MILITARY SPECIFICATION SHEET

ELECTRON TUBE, THYRATRON, HYDROGEN

JAN-3C45, 6130

This specification sheet forms a part of the latest issue of Military Specification MIL-E-1.

Ratings:	Test Code:	Ef	epy	epx	Ebb	Ec	egx	egy	ib	Ib	tk	dik/dt	Pb'	TA	Cooling	prr	Alt
Absolute:	both:	Vac	kv	kv	Vdc	Vdc	v	v	a	mAdc	sec(min)	a/us	---	°C	---	pps	ft
Maximum:	(a):	6.3∱ 5% -10%	3.0 Note 1	3.0 Note 2	---	---	200	--- Note 3	35	45	---	750	0.3×10^9	∱90	Note 4	---	10,000
	(b):	6.3∱ 5% -10%	3.0 Note 1	3.0 Note 2	---	---	200	--- Note 3	35	45	---	750	0.3×10^9	∱90	Note 4	---	50,000
Minimum:	both:	---	---	5% epy	800	---	---	---	---	---	120	---	---	-50	---	---	---
Test Cond:	both:	6.3	3.0	---	---	0	---	130	---	---	120	---	---	---	---	2800	---

**Cathode: (a) Coated Unipotential
(b) Coated Unipotential

*Height: 4-1/2 in. min., 5-3/16 in. max.
4-13/16 in. min., 5-3/16 in. max.

**Base: both: Medium 4-Pin Low-Loss Phenolic A4-9
Clamping: both: Note 5

*Diameter: 1-9/16 in. maximum
**Cap: Small Metal C1-1

**Pin No.:	both:	1	2	3	4	Cap
Element:	both:	h	k	g	h k	p

Mounting Position: Any
**Envelope: T-12

The following tests shall be performed:
For miscellaneous requirements, see Paragraph 3.3, Inspection Instructions for Electron Tubes.

Ref.	Test	Test Code	Conditions	AQL(%)	Insp. Level or Code	Sym.	LIMITS Min.	LAL	Bogie	UAL	Max.	ALD	Units
	Qualification Approval Tests												
3.1	Qualification Approval:	both:	Required for JAN Marking	---	---								
---	Cathode:	both:	Coated Unipotential	---	---								
3.4.3	Base Connections:												
4.9.19.1	Vibration (1):	both:	No Voltages; F=12 to 50 cps; Notes 6 and 7										
4.9.19.2	Vibration (2):	both:	t = 30 (min); Note 7										
---	Operation (2):	both:	t=5.0 hours;TA=90°C;Note 8			egy:	---	---	---	---	130	---	v
---	Operation (4):	(b):	t=5.0 hours; Notes 8 and 9			egy:	---	---	---	---	130	---	v
	Measurements Acceptance Tests, Part 1: Note 10												
4.5	Holding Period:	both:	t=96 hours										
4.10.8	Heater Current:	both:		0.65	II	If:	2.0	---	---	---	2.5	---	Aac
---	†Instantaneous Starting:	both:	epy=3000v(min); Notes 8 and 11	0.65	II	---	---	---	---	---	---	---	
4.10.17.2	DC Anode Voltage:	both:	Notes 8 and 12	0.65	II	Ebb:	---	---	---	---	300	---	Vdc
---	†Operation (1):	both:	epy=4.0kv(min); Notes 8 and 13	0.65	II	egy:	---	---	---	---	130	---	v
---	Emission:	both:	ik=35a(min);prr=60pps ±10%tp=5.0us±10%tr= 0.5us max; Note 14	0.65	II	egk:	---	---	---	---	160	---	v
4.9.1	Mechanical:	both:											

CV 3629

Ref.	Test	Test Code	Conditions	AQL(%)	Insp. Level or Code	Sym.	LIMITS Min.	LAL	Bogie	UAL	Max.	ALD	Units
	Measurements Acceptance Tests, Part 2												
4.9.19.3	Bump:	both:	Angle = 20°; Note 7	6.5	IA								
---	Anode Delay Time:	both:	epy=4.0kv(min);Notes 8,13;t=120; Note 15	6.5	IA	tad:	---	---	---	---	0.6	---	us
---	Anode Delay Time Drift:	both:	Anode Delay Time; Note 16	6.5	IA	Δtad:	---	---	---	---	0.15	---	us
× ---	Time Jitter:	both:	epy=1.5kv max; Notes 8 & 17	6.5	IA	tj:	---	---	---	---	0.02	---	us
---	Operation (3):	(b):	t=5.0minutes;Notes 8 & 9	6.5	IA	egy:	---	---	---	---	130	---	v

Ref.	Test	Test Code	Conditions	AQL(%)	Insp. Level or Code	Allowable Defectives per Characteristic 1st Sample	Combined Samples	Sym.	Limits Min.	Max.	Units
	Acceptance Life Tests										
4.11	Life Test:	both:	Group B; Notes 8 and 18					t:	500	---	hours
4.11.4	Life Test End Points:	both:	Operation (1)					egy:	---	140	v
			DC Anode Voltage					Ebb:	---	750	Vdc
			Time Jitter					tj:	---	0.04	us
	Packaging Requirements										
4.9.18.1.6	Container Drop:	both:	(d) Package Group 1; Container Size J								

Note 1: For instantaneous starting applications where plate voltage is applied instantaneously, the power supply filter design shall be such that the maximum permissible epy is 3000v and shall not be attained in less than 0.04 seconds.

Note 2: In pulsed operation, the peak inverse voltage, exclusive of a spike of .05us max. duration, shall not exceed 1500 volts during the first 25 us after the pulse.

Note 3: Driver pulse, measured at tube socket with thyratron grid disconnected: egy=175v(min), time of rise=0.5us(max), grid pulse duration=2.0us(min). Impedance of drive circuits=1500 ohms (max.)

Note 4: Cooling of the anode lead is permissible, but there shall be no air blast directly on the bulb.

Note 5: Clamping is permissible by the base and/or bulb in the area up to 2 in. above the top of the base only.

Note 6: There shall be no pronounced resonance in the specified range.

Note 7: There shall be no evidence of shorts of any kind resulting from this test.

Note 8: The tube shall be tested in the test circuit shown in the attached drawing. Tests performed at repetition rates less than the resonant repetition rate shall be made with a hold-off diode in the charging circuit. The circuit constants shall be chosen so that at epy=3.0kv under resonant charging conditions, dik/dt=750a/us(min), ib=35a, tp=0.5us±10%, prr=3000 pps.

Warning: These conditions are specified only for the purpose of determining circuit constants. The actual operating voltage and repetition rates for each test is specified in the conventional manner under the particular conditions or under the general test conditions, as the case may be.

The grid pulse characteristics shall be tp=2.0us(max), tr=0.5us(min), Driver impedance=1500 ohms(min).

Note 9: The tube shall operate satisfactorily in an evacuated chamber in which the pressure does not exceed 70 mm Hg absolute.

Note 10: The AQL for the combined defectives for attributes in Measurements Acceptance Tests, Part 1, excluding Mechanical, shall be one percent. A tube having one or more defects shall be counted as one defective. MIL-STD-105, Inspection Level II, shall apply.

Note 11: This shall be the first test after the holding period. The tube shall operate satisfactorily on push button starting within 3 attempts when the anode voltage epy is applied to the tube under test in such a manner as to rise from 0 to 3000v within 0.03 sec. (the filter in the rectifier shall be designed so that epy reaches at least 1500v within 0.015 sec).

The intervals between successive attempts to instantaneously start the tube shall not be less than 10 seconds nor more than 30 seconds. The tube failing to start within 3 attempts will be considered a failure.

Note 12: This test shall be conducted within 60 seconds after the Operation (1) test.

Note 13: The tube shall operate continuously, for five minutes without evidence of arc-back or anode heating.

Note 14: The positive pulse shall be applied to the grid of the tube. Measure the voltage between grid and cathode 2.5us(max) after the beginning of the current pulse. The average voltage shall not rise during the last four microseconds. Plate floating.

Note 15: Anode Delay Time (tad) - a time interval between the point on the rising portion of the grid pulse which is 26% of the maximum unloaded pulse amplitude and the point where anode conduction takes place.

Note 16: During the interval between 2 minutes and 7 minutes of the Anode Delay Time Test, the change in anode delay time (Δtad) relative to the tad value observed on the Anode Delay Time test shall not exceed the specified value.

Note 17: The variation in firing time (tj) shall be measured at 50% of pulse amplitude and shall not be greater than the amount specified.

Note 18: Life test shall be operated with the tube in a horizontal position and shall be shut down every ninety-six (96) hours for a sixty (60) minute interval.

Note 19: Reference specification shall be of the issue in effect on the date of invitation for bid.

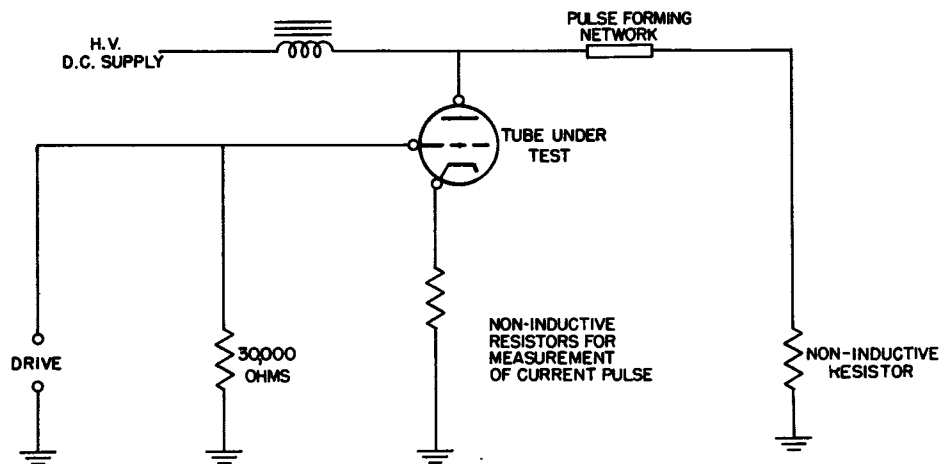

Zg21794

JAN-3C45, 6130
(a) (b)

MINISTRY OF SUPPLY - D.L.R.D.(A)/R.A.E.

VALVE ELECTRONIC **CV3928**

Specification M.O.S.(A)/CV.3928 incorporating MIL-E-1/168C Issue 1 Dated 12.3.56 To be read in conjunction with B.S.1409 and K.1006	SECURITY Specification: UNCLASSIFIED Valve: UNCLASSIFIED

TYPE OF VALVE - Subminiature Pentode with flying leads

CATHODE - Indirectly heated

ENVELOPE - Glass

PROTOTYPE - 5636

MARKING
See K.1001/4
Additional Marking:-
5636

BASE
B8D
(Subminiature - 8pin with long leads)

RATING			Note
Heater Voltage	(V)	6.3	
Heater Current	(mA)	150	
Max. Operating Anode Voltage	(V)	165	A
Max. Operating Screen Voltage	(V)	155	A
Max. Anode Dissipation	(W)	0.55	A
Max. Screen Dissipation	(W)	0.45	A
Max. Heater - Cathode Voltage	(V)	200	A
Max. Cathode Current	(mA)	16.0	A
Mutual Conductance	(mA/V)	3.2	

CONNECTIONS

Lead	Electrode
1	g1
2	k
3	h
4	g3
5	a
6	h
7	g2
8	k

DIMENSIONS
See K1006.T3. Outline 8-1

CAPACITANCES (pF)			Note
C in (nom.)		4.0	B
C out (nom.)		3.4	B
Ca,g1 (max.)		0.02	B

Dimensions(in.)	Min.	Max.
A	-	1.375
B	1.05	1.135
Diam.	-	0.4

MOUNTING POSITION

Any

NOTES

A. Absolute Value.

B. With close fitting metal screen.

CV3928

MIL-E-1/168C
23 June 1955
SUPERSEDING
MIL-E-1/168B
26 October 1954

INDIVIDUAL MILITARY SPECIFICATION SHEET

ELECTRON TUBE, RECEIVING, PENTODE, SUBMINIATURE

JAN-5636

This specification sheet forms a part of the latest issue of Military Specification MIL-E-1.

Description: Pentode, Dual Control

Ratings:	Ef	Eb	Ec1	Ec2	Ec3	Ehk	Rk	Rg1	Ik	Ic2	Pp	Pg2	T Envelope	Alt
Absolute	V	Vdc	Vdc	Vdc	Vdc	v	ohms	Meg	mAdc	mAdc	W	W	°C	ft
Maximum:	6.6	165	0	155	30	200	—	1.1	16.0	7.0	.55	0.45	+220	60,000 Note 2
Minimum:	6.0	—	-55	—	—	—	—	—	—	—	—	—	—	—
Test Cond.:	6.3	100	0	100	0 Note 1	0 Note 1	150	—	—	—	—	—	—	—

Cathode: Coated Unipotential
Base: Subminiature - 8 Pin with long leads

Diameter: 0.400 in. max.
Height: 1.375 in. max.

Pin No.:	1	2	3	4	5	6	7	8
Element:	g1	k	h	g3	p	h	g2	k

Envelope: T-3

The following tests shall be performed:
For the purposes of inspection, use applicable reliable paragraphs of MIL-E-1 and Inspection Instructions for Electron Tubes.
For miscellaneous requirements see Paragraph 3.3, Inspection Instructions for Electron Tubes.

Ref.	Test	Conditions	AQL(%)	Insp. Level or Code	Sym.	LIMITS Min.	LAL	Bogie	UAL	Max.	ALD	Units
	Qualification Approval Tests											
3.1	Qualification Approval:	Required for JAN Marking	—	—								
—	Cathode:	Coated Unipotential	—	—								
3.4.3	Base Connections:		—	—								
	Measurements Acceptance Tests Part 1, Note 3											
4.10.8	Heater Current:	Note 4	—	—	If:	—	144	150	156	—	12	mA
4.10.8	Heater Current:		0.65	II	If:	140	—	—	—	160	—	mA
4.10.15	Heater-Cathode Leakage:	Ehk=+100Vdc Ehk=-100Vdc	0.65	II	Ihk: Ihk:	— —	— —	— —	— —	5.0 5.0	— —	uAdc uAdc
4.10.6.1	Grid Current:	Rg1=1.0Meg	0.65	II	Ic1:	0	—	—	—	-0.3	—	uAdc
4.10.4.1	Plate Current(1):	Note 4	—	—	Ib:	—	4.6	5.3	6.0	—	2.0	mAdc
4.10.4.1	Plate Current(1):		0.65	II	Ib:	3.7	—	—	—	6.9	—	mAdc
4.10.9	Transconductance(1):	Note 4	—	—	Sm:	—	2900	3200	3500	—	900	umhos
4.10.9	Transconductance(1):		0.65	II	Sm:	2700	—	—	—	4000	—	umhos
4.10.4.1	Plate Current(2):	Ec1=-7.5Vdc;Rk=0	0.65	II	Ib:	—	—	—	—	100	—	uAdc
4.7.5	Continuity and Shorts (Inoperatives):		0.4	II	—	—	—	—	—	—	—	
4.9.1	Mechanical:	Envelope(8-1)	—	—	—	—	—	—	—	—	—	
	Measurements Acceptance Tests Part 2											
4.8.2	Insulation of Electrodes:	g1-all p-all	2.5	I	R: R:	100 100	— —	— —	— —	— —	— —	Meg Meg
4.10.4.3	Screen Grid Current:		2.5	I	Ic2:	2.8	—	—	—	5.4	—	mAdc
4.10.4.1	Plate Current(3):	Ec3=-8.0Vdc;Note 23	2.5	I	Ib:	—	—	—	—	100	—	uAdc
4.10.9	Transconductance(2):	Ef=5.7V;Note 24	2.5	I	Δ_{Sm}:	—	—	—	—	1*	—	%

CV3928

Ref.	Test	Conditions	AQL(%)	Insp. Level or Code	Sym.	LIMITS Min.	LAL	Bogie	UAL	Max.	ALD	Units
	Measurements Acceptance Tests Part 2(Contd)											
4.10.9	Transconductance(3):	Eb3=-1.0Vdc;Note 23	2.5	I	Sm(g3-p):	500	—	—	—	1800	—	umhos
4.10.6.2	Grid Emission:	Ef=7.5V;Ec1=-7.5Vdc; Rg1=1.0Meg;Rk=0; Note 22	2.5	I	Ic1:	0	—	—	—	-0.5	—	uAdc
4.10.3.2	AF Noise:	Esig=70mVac;Eb2=19Vdc; Rp=0.2Meg;Rg1=0.1Meg; Rg2=1000;Ck=1000uf	2.5	I	Nk:	—	—	—	—	17	—	VU
4.10.14	Capacitance:	0.405 in dia. shield			Cg1p:	—	—	—	—	0.020	—	uuf
		0.405 in dia. shield			Cg3p:	—	—	—	—	1.10	—	uuf
		0.405 in dia. shield	6.5	Code F	Cg1-g3:	—	—	—	—	0.15	—	uuf
		0.405 in dia. shield			Cg1-all:	3.5	—	—	—	4.5	—	uuf
		0.405 in dia. shield			Cg3-all:	3.5	—	—	—	4.5	—	uuf
		0.405 in dia. shield			Cp-all:	2.9	—	—	—	3.9	—	uuf
—	Low Pressure Voltage Breakdown:	Pressure=55±5mm Hg.; Voltage=300Vac;Note 6	6.5	Note 5		—	—	—	—	—	—	
4.9.20.7	Vibration(1):	No Voltages;Post Shock and Fatigue Test End Points apply	10.0	Note 5		—	—	—	—	—		
4.9.19.1	Vibration(2):	F=40cps;G=15;Rp=10,000; Ck=1000uf;Note 7	2.5	I	Ep:	—	—	—	—	60	—	mVac
	Degradation Rate Acceptance Tests Note 8											
4.9.5.3	Subminiature Lead Fatigue:	Note 9	2.5	Code F	—	4	—	—	—	—	—	arcs
4.9.20.5	Shock:	Hammer angle=30°; Ebk=+100Vdc;Rg1=0.1Meg; Note 10	20	—	—	—	—	—	—	—	—	—
4.9.20.6	Fatigue:	G=2.5;Fixed Frequency; F=25min.,60max.	6.5	Note 5	—	—	—	—	—	—	—	—
—	Post Shock and Fatigue Test End Points:	Vibration(2)	—	—	Ep:	—	—	—	—	200	—	mVac
		Heater-Cathode Leakage										
		Ebk=+100Vdc	—	—	Ibk:	—	—	—	—	20	—	uAdc
		Ebk=-100Vdc	—	—	Ibk:	—	—	—	—	20	—	uAdc
		Change in Transconductance(1) of individual tubes	—	—	Δ_{t}^{Sm}:	—	—	—	—	20	—	%
—	Glass Strain:	Note 11	6.5	I	—	—	—	—	—	—	—	

Ref.	Test	Conditions	AQL(%)	Insp. Level or Code	Allowable Defectives per Characteristic 1st Sample	Allowable Defectives per Characteristic Combined Samples	Sym.	LIMITS Min.	LIMITS Max.	Units
	Acceptance Life Tests Note 8									
4.11.7	Heater Cycling Life Test:	Ef=7.0V;1min. on, 4min. off;Ebk=140Vac;Ec1=Eb2=Eb3=Ek=0;Note 12	2.5	Code H	—	—		—	—	
—	Stability Life Test: (1 hour)	Ebk=+200Vdc;Rg1=1.0Meg; TA=Room;Note 13	1.0	Code I	—	—		—	—	
4.11.4	Stability Life Test End Points:	Change in Transconductance(1) of individual tubes	—	—	—	—	Δ_{t}^{Sm}:	—	15	%
—	Survival Rate Life Test:	Stability Life Test Conditions or equivalent; TA=Room;Notes 14,15	—	II	—	—		—	—	
4.11.4	Survival Rate Life Test End Points:	Continuity and Shorts (Inoperatives)	0.65	—	—	—		—	—	
		Transconductance(1)	1.0	—	—	—	Sm:	2350	—	umhos

CV3928

Ref.	Test	Conditions	AQL(%)	Insp. Level or Code	Allowable Defectives per Characteristic		Sym.	LIMITS		Units
					1st Sample	Combined Samples		Min.	Max.	
	Acceptance Life Tests(Contd)									
4.11.3	Intermittent Life Test:	**Stability Life Test** Conditions;T Envelope= +220°C min;Notes 16,17; 1000 Hour Requirements do not apply	—	—	-	—		—	—	
4.11.4	Intermittent Life Test End Points;(500 Hours): Note 17	Note 18								
		Inoperatives;Note 19	—	—	1	3	—	—	—	
		Grid Current	—	—	1	3	Icl:	0	-0.9	uAdc
		Heater Current	—	—	2	5	If:	138	164	mA
		Change in Transconductance(1) of individual tubes	—	—	1	3	Δ_t^{Sm}:	—	20	%
		Transconductance(2)	—	—	2	5	Δ_{Er}^{Sm}:	—	15	%
		Heater-Cathode Leakage								
		Ehk=+100Vdc	—	—	2	5	Ihk:	—	10	uAdc
		Ehk=-100Vdc					Ihk:	—	10	uAdc
		Insulation of Electrodes								
		g1-all	—	—	2	5	R:	50	—	Meg
		p-all					R:	50	—	Meg
		Transconductance(1) average change	—	—	—	—	Avg Δ_t^{Sm}:	—	15	%
		Total Defectives	—	—	4	8	—	—	—	—
4.11.5	Information Life Test: (1000 Hours)	Intermittent Life Test Conditions;Notes 17,20, 21								
	Packaging Information									
4.9.18.1.1	Carton Drop:	(d) Package Group 1; Carton Size C								

Caution to Electron Equipment Design Engineers. Special attention should be given to the temperature at which the tubes are to be operated. Reliability will be seriously impaired if maximum bulb temperature is exceeded. The life expectancy may be reduced if conditions other than those specified for life test are imposed on the tube and will be reduced appreciably if absolute maximum ratings are exceeded. Both reliability and performance will be jeopardized if filament voltage ratings are exceeded. Life and reliability of performance are directly related to the degree that regulation of the heater is maintained at its center rated value.

Note 1: The reference point for heater-cathode and suppressor potentials shall be the positive terminal of the cathode resistor unless otherwise specified.

Note 2: If altitude rating is exceeded, reduction of instantaneous voltages (Ef, excluded) may be required.

Note 3: The AQL for the combined defectives for attributes in Measurements Acceptance Tests, Part 1, excluding inoperatives and mechanical shall be one (1) percent. A tube having one (1) or more defects shall be counted as one (1) defective. MIL-STD-105, Inspection Level II shall apply.

Note 4: Variables Sampling Procedure:

Test for Lot-Average Acceptance:

Select a 35 tube sample at random from the lot. Number these tubes consecutively.

Determine the numerical average value of the characteristic as specified on the specification sheet of the 35 tube sample. If this value is on or above the LAL and on or below the UAL, accept for Lot Average.

Test for Lot Dispersion Acceptance:

Divide the 35 tube sample into seven (7) consecutive sub-groups of five (5) tubes each. Determine the range, R, of each sub-group for the measured characteristic specified on the Specification Sheet.

Compute the numerical average of the R values which is equal to $\overline{R}$. If $\overline{R}$ is equal to or less than the ALD, accept for Lot Dispersion.

CV3928

Note 5: This test shall be conducted on the initial lot and thereafter on a lot approximately every 30 days. Once a lot has passed, the 30-day rule shall apply. In the event of lot failure, the lot shall be rejected and the succeeding lot shall be subjected to this test. MIL-STD-105, sample size code letter F shall apply.

Note 6: There shall be no evidence of arcing or corona between anode pins and adjacent pins with no other voltages applied.

Note 7: For vibration tests, the impedance of the plate voltage supply (and screen voltage supply, if one is indicated) shall not exceed that of a 40 uf capacitor at 10 cps.

Note 8: Destructive tests:

Tubes subjected to the following destructive tests are not to be accepted under this specification

4.9.5.3	Subminiature Lead Fatigue.
4.9.20.5	Shock.
4.9.20.6	Fatigue.
4.11.7	Heater Cycling Life Test.
4.11.5	Intermittent Life Test.

Note 9: When a manufacturer submits tubes for qualification approval, five extra tubes shall be submitted for lead fatigue testing. These may be electrical rejects.

Note 10: Leads may be clipped for application of voltages during impact.

Note 11: Glass strain procedures - All tubes submitted to this shall have been sealed a minimum of 48 hours prior to conducting this test. All tubes shall be at room temperature. The entire tube shall be immersed in water not less than 85°C for 15 seconds and immediately thereafter immersed in ice water not more than 5°C for 5 seconds. The volume of water shall be large enough that the temperature will not be appreciably affected by the test. The method of submersion shall be in accordance with Drawing #245 JAN, and such that a minimum of heat is conducted away by the holder used. The tubes shall be placed in the water so that no contact is made with the containing vessel, nor shall the tubes contact each other. After the 5-second submersion period, the tubes shall be removed and allowed to dry at room temperature on a wooden surface. After drying at room temperature for a period of 48 hours, the tubes shall be inspected and rejected for evidence of air leaks. Electrical rejects other than inoperatives may be used in the performance of this test.

Note 12: The regulation of the heater voltage supply shall be not more than 3.0 percent. This test shall be made on a lot by lot basis. A failure or defect shall consist of an open heater, open cathode circuit, or a heater-cathode short.

Note 13: Stability Life Test:

a. Life test samples shall be selected from a lot at random in such a manner as to be representative of the lot. If such selection results in a sample containing tubes which are outside the initial specification sheet limits for the relevant life test end point characteristics, such tubes shall be replaced by randomly selected acceptable tubes.

b. Serially mark all tubes from the sample.

c. Record referenced characteristic measurements after a maximum operation of 15 minutes at specified voltage and current conditions on the entire sample.

d. Operate at life test conditions for one (1) hour (plus 30 minutes, minus 0 minutes). Life test shall be conducted as per paragraphs 4.11 and 4.11.5, MIL-E-1, except that the following shall be substituted for the third sentence of 4.11: The mean electrode potentials, except heater or filament, may be established at values differing by not more than 5% from the specified values provided the same average electrode dissipations are obtained that occur with the specified voltages. Fluctuations of all voltages including heater or filament voltage shall be as small as practical.

e. Record referenced characteristic measurements at the end of this test period. Referenced characteristic measurements shall be taken immediately following the test or tubes shall be preheated 15 minutes under specified test voltage and current conditions, and immediately measured. The 15 minutes preheat shall be considered as part of the test time.

f. A defective shall be defined as a tube having a change in referenced characteristic greater than that specified on the specification sheet.

g. A resubmitted lot must be subjected to all Measurements Acceptance Tests except Mechanical Inspection, Vibration, and Low Pressure Voltage Breakdown tests.

Note 14: MEANS OF ASSURING SURVIVAL RATE - The procedure for assuring the maintenance of a desirable quality level in terms of early life survival consists of a series of normal, reduced, and tightened inspection plans for use at 100 hours. The sample size is dependent upon lot size, and the transfer between normal, reduced, and tightened inspection is dependent upon quality history.

The selection of inspection scheme and sampling plan shall be in accordance with Inspection Instructions for Electron Tubes paragraph 5.3.4.2 through 5.3.4.3.1.3 inclusive except that paragraph 5.3.4.2.2 shall be modified by deleting the last part of the first sentence which states ". . . . or if no lot in the last 20 lots inspected shall have been declared nonconforming for life test qualities." At the manufacturer's option, reduced inspection may be used if no lot in the last ten (10) lots inspected have been declared nonconforming.

INSPECTION PROCEDURE

a. Select sample in accordance with Note 13, paragraph (a).

b. Tubes to be tested at 100 hours as provided in MIL-E-1(4.7.5). When any tap-short indication is obtained, the test shall be repeated. When any short indication is again obtained the tube will be rejected as an inoperative.

Note 14: (Contd)

c. Determine the number of defective tubes at the 100 hour period.

d. If more than the allowable number of defectives occur, declare the lot nonconforming.

e. A resubmitted lot must be subjected to all Measurements Acceptance Tests except Mechanical Inspection, Vibration, and Low Pressure Voltage Breakdown tests.

Note 15: For Survival Rate Life Test, the equivalent Stability Life Test conditions shall be interpreted as having the same heater voltage (Ef) and heater-cathode voltage (Ehk) as the Stability Life Test; and the same interruptions of MIL-E-1 paragraph 4.11.5 as the Intermittent Life Test. The electrode voltages shall be such that the element dissipations are not less than 80 percent, nor more than 100 percent of Stability Life Test plate dissipation. These voltages are to be maintained within the limits of plus 200, minus 50 percent of the Stability Life Test voltages.

Note 16: Intermittent Life Tests:

a. The first 20 tubes of the Stability Life Test sample which meet the measurement acceptance test limits for those characteristics specified as Intermittent Life Test End Points shall be used for the Intermittent Life Test sample. In the event that a second Stability Life Test sample is used, the first 20 tubes from that sample which meet the above conditions shall be used.

b. In the event of failure of the first sample on Intermittent Life Test, take a completely fresh sample (MIL-STD-105 sample size code letter I) and stabilize it in accordance with the conditions of the Stability Life Test. Then select from it the first 40 tubes which meet the measurements acceptance test limits for those characteristics specified as Intermittent Life Test End Points.

Subject these 40 tubes to the Intermittent Life Test. Acceptance shall then be based on combined results from the first and second samples.

c. As an alternate method, the manufacturer may select his life test sample as described in Note 13, paragraph (a).

d. Life test shall be conducted as per paragraphs 4.11, and 4.11.5, MIL-E-1, except that the following shall be substituted for the third sentence of 4.11: The mean electrode potentials, except heater or filament may be established at values differing by not more than 5% from the specified values provided the same average electrode dissipations are obtained that occur with the specified voltages. Fluctuations of all voltages including heater or filament voltage shall be as small as practical.

e. Regular Life Test

1. Regular Life test shall be conducted for 1000 hours.

2. Regular life test acceptance shall be on the basis of the 500 and 1000 hours requirements as indicated on Specification Sheet.

3. Regular life test shall be in effect initially and shall continue in effect until the eligibility criteria for the Reduced Hours Life Test have been met.

f. Reduced Hours Life Test:

1. Reduced Hours Life Test shall be conducted for 500 hours and acceptance shall be based on the 500 hour end point limits.

2. Eligibility for Reduced Hours Life Tests: No lot failure due to the 1000 hour life test has occurred in the preceding three (3) consecutive lots.

3. Loss of eligibility for Reduced Hours Life Test: Two (2) or more 500 hour life test lot failures occurring in the last three (3) consecutive lots.

g. The life test sample shall be read at the following times:

0 hours
500 hours (plus 48 hours;minus 24 hours)
1000 hours (plus 48 hours;minus 24 hours;when in force)

Additional reading periods may be used at the discretion of the electron tube manufacturer.

h. Acceptance Criteria: The lot shall be considered satisfactory for acceptance provided that the specified allowable defects are not exceeded and the change of the average of any characteristic in the life test sample specified for life test control of averages is not exceeded. The average percentage change shall be ascertained from the determination of the individual changes for each tube in the life test sample from the zero (0) hour value for the referenced characteristic or characteristics. For purposes of computation of this average percentage change, the absolute values of the individual changes for each tube in the life test sample shall be used. Any tube found inoperative during life testing shall not be considered in the calculation of this average.

i. A resubmitted lot must be subjected to all Measurements Acceptance Tests except Mechanical Inspection, Vibration, and Low Pressure Voltage Breakdown.

j. Not more than one (1) accidental breakage shall be allowed in the life test sample. In the event that one (1) life test tube is accidentally broken, acceptability of the life test sample shall be based upon the remaining tubes in the sample provided that the broken tube was not known to be a defective.

Note 17: Envelope Temperature shall be defined as the highest temperature indicated when using a thermocouple of #40 BS or smaller diameter elements welded to a ring of .025 inch diameter phosphor bronze placed in contact with the envelope.

JAN-5636

CV3928

Note 18: Order for evaluation of life test defects.- In the event a tube is defective for more than one attribute characteristic, the characteristic appearing first in the Life Test End Points shall constitute the failure.

Note 19: An inoperative as referenced in Life Test shall be defined as a tube having one (1) or more of the following defects: discontinuity (Ref. MIL-E-1, par. 4.7.1), shorts (Ref. MIL-E-1, par. 4.7.2), air leaks.

Note 20: On information Life Tests, read same characteristics as Intermittent Life Test. Limits do not apply. Six copies of these data shall be forwarded to the Armed Services Electron Tube Committee upon request.

Note 21: This life test shall be conducted on a minimum of one sample of ten tubes each month of production. This sample shall be selected as the first ten serially marked, noninoperative tubes from a completed Intermittent Life Test sample. This life test shall be classified as a destructive test. Read at 1000 hours.

Note 22: Prior to this test tubes shall be preheated five (5) minutes at conditions indicated below. Test within three (3) seconds after preheating. Three-minute test is not permitted. Grid Emission shall be the last test performed on the sample selected for the Grid Emission test.

Ef	Ec1	Ec2	Ec3	Eb	Rk	Rg1
V	Vdc	Vdc	Vdc	Vdc	ohms	Meg
7.5	0	100	0	100	150	1.0

Note 23: The reference point for grid number 3 potentials on this test shall be the negative side of the cathode resistor.

Note 24: Transconductance(2) is the percent change in Transconductance(1) of an individual tube resulting from the change in Ef.

Note 25: Reference specification shall be of the issue in effect on the date of invitation for bid.

MINISTRY OF SUPPLY - D.L.R.D.(A)/R.A.E.

VALVE ELECTRONIC

CV3929

Specification MOS(A)/CV3929 incorporating MIL-E-1/140B Issue 1 Dated 8.3.56 To be read in conjunction with B.S.1409 and K.1006	SECURITY	
	Specification	Valve
	UNCLASSIFIED	UNCLASSIFIED

TYPE OF VALVE - Subminiature Pentode, sharp cut off, with flexible leads

CATHODE - Indirectly heated

ENVELOPE - Glass

PROTOTYPE - 5840

MARKING

See K.1001/4

Additional marking:-

5840

BASE

B8D

(Subminiature - 8 pin with long leads)

RATING

			Notes
Heater Voltage	(V)	6.3	
Heater Current	(mA)	150	
Max. Operating Anode Voltage	(V)	165	A
Max. Operating Screen Voltage	(V)	155	A
Max. Anode Dissipation	(W)	0.8	A
Max. Screen Dissipation	(W)	0.35	A
Max. Cathode Current	(mA)	16.5	A
Max. Heater - Cathode Voltage	(V)	200	A
Min. Anode Impedance	(kΩ)	175	C
Mutual Conductance	(mA/V)	5	C

CONNECTIONS

Lead	Electrode
1	g1
2	k + g3
3	h
4	k + g3
5	a
6	h
7	g2
8	k + g3

DIMENSIONS

See K.1006.T3. outline 8-1

Dimensions (inches)	Min.	Max.
A	-	1.375
B	1.015	1.135
Diam.	-	0.40

CAPACITANCES (pF)

Cin (nom.)	4.2	B
Cout (nom.)	3.4	B
Ca, g1 (max.)	0.015	B

MOUNTING POSITION

Any

NOTES

A. Absolute Value.

B. Measured with a close fitting metal screen.

C. At Va = 100V; Vg2 = 100V; Vg1 = -1.5V (A.W) (Ia = 7.5 mA; Ig2 = 2.4 mA)

NOTE

†. The lead connection of 5840 shall apply.

CV3929

MIL-E-1/140B
5 August 1955
SUPERSEDING
MIL-E-1/140A
26 October 1954

INDIVIDUAL MILITARY SPECIFICATION SHEET

ELECTRON TUBE, RECEIVING, PENTODE, SUBMINIATURE

JAN-5840, 6205

This specification sheet forms a part of the latest issue of Military Specification MIL-E-1.

Description: Pentode, Sharp Cutoff

Ratings:	Ef V	Eb Vdc	Ecl Vdc	Ec2 Vdc	Ec3 Vdc	Ehk v	Rk ohms	Rgl Meg	Ik mAdc	Pp W	Pg2 W	T Envelope °C	Alt ft
Absolute Maximum:	6.6	165	0	155	22	200	—	1.1	16.5	0.80	0.35	/220	60,000 Note 2
Minimum:	6.0	—	-55	—	—	—	—	—	—	—	—	—	—
Test Cond.:	6.3	100	0	100	0 Notes 1, 22	0 Note 1	150	—	—	—	—	—	—

Cathode: Coated Unipotential
Base: Subminiature - 8 Pin with long leads

Diameter: 0.400 in. max.
Height: 1.375 in. max.

Envelope: T-3

Pin No.:	1	2	3	4	5	6	7	8	
Element:	g1	k g3	h	k g3	p	h	g2	k g3	Type 5840
Element:	g1	k sd	h	g3	p	h	g2	k sd	Type 6205

The following tests shall be performed:
For the purposes of inspection, use applicable reliable paragraphs of MIL-E-1 and Inspection Instructions for Electron Tubes.
For miscellaneous requirements, see Paragraph 3.3, Inspection Instructions for Electron Tubes.

Ref.	Test	Conditions	AQL(%)	Insp. Level or Code	Sym.	LIMITS Min.	LAL	Bogie	UAL	Max.	ALD	Units
	Qualification Approval Tests											
3.1	Qualification Approval:	Required for JAN Marking	—	—								
—	Cathode:	Coated Unipotential	—	—								
3.4.3	Base Connections:		—	—								
	Measurements Acceptance Tests, Part 1, Note 3											
4.10.8	Heater Current:	Note 4	—	—	If:	—	144	150	156	—	12	mA
4.10.8	Heater Current:		0.65	II	If:	140	—	—	—	160	—	mA
4.10.15	Heater-Cathode Leakage:	Ehk=/100Vdc Ehk=-100Vdc	0.65	II	Ihk: Ihk:	— —	— —	— —	— —	5.0 5.0	— —	uAdc uAdc
4.10.6.1	Grid Current:	Rgl=1.0Meg	0.65	II	Icl:	0	—	—	—	-0.3	—	uAdc
4.10.4.1	Plate Current(1):	Note 4	—	—	Ib:	—	6.7	7.5	8.3	—	2.3	mAdc
4.10.4.1	Plate Current(1):		0.65	II	Ib:	5.5	—	—	—	9.5	—	mAdc
4.10.4.1	Plate Current(2):	Ecl=-9.0Vdc;Ek=0	0.65	II	Ib:	—	—	—	—	50	—	uAdc
4.10.4.3	Screen Grid Current:		0.65	II	Ic2:	1.5	—	—	—	3.3	—	mAdc
4.10.9	Transconductance(1):	Note 4	—	—	Sm:	—	4700	5000	5300	—	900	umhos
4.10.9	Transconductance(1):		0.65	II	Sm:	4200	—	—	—	5800	—	umhos
4.7.5	Continuity and Shorts (Inoperatives):		0.40	II	—	—	—	—	—	—	—	
4.9.1	Mechanical:	Envelope(8-1)										
	Measurements Acceptance Tests, Part 2											
4.8.2	Insulation of Electrodes:	g1-all p-all	2.5	I	R: R:	100 100	— —	— —	— —	— —	— —	Meg Meg
4.10.9	Transconductance(2):	Ef=5.7V;Note 23	2.5	I	ΔSm_{gr}:	—	—	—	—	10	—	%

CV3929

Ref.	Test	Conditions	AQL(%)	Insp. Level or Code	Sym.	LIMITS Min.	LAL	Bogie	UAL	Max.	ALD	Units
	Measurements Acceptance Tests, Part 2(Contd)											
4.10.6.2	Grid Emission:	Ef=7.5V;Ec1=-9.0Vdc; Rg1=1.0Meg;Rk=0; Note 24	2.5	I	Ic1:	0	—	—	—	-0.5	—	uAdc
4.10.3.2	AF Noise:	Esig=70mVac;Ec2=19Vdc; Rg1=0.1Meg;Rg2=1000; Rp=0.2Meg;Ck=1000uf	2.5	I	EB:	—	—	—	—	17	—	VU
4.10.10	Plate Resistance:		6.5	IA	rp:	0.175	—	—	—	—	—	Meg
4.10.14	Capacitance:	0.405 in. dia. Shield			Cg1p:	—	—	—	—	0.015	—	uuf
		0.405 in. dia. Shield	6.5	Code	Cin:	3.5	—	—	—	4.9	—	uuf
		0.405 in. dia. Shield		F	Cout:	2.9	—	—	—	3.9	—	uuf
—	Low Pressure Voltage Breakdown:	Pressure=55±5mm Hg.; Voltage=300Vac;Note 6	6.5	Note 5		—	—	—	—	—	—	
4.9.20.3	Vibration(1):	No Voltages;Post Shock and Fatigue Test End Points apply	10.0	Note 5		—	—	—	—	—	—	
4.9.19.1	Vibration(2):	Ep=10,000;Ck=1000uf; F=40cps;G=15;Note 7	2.5	I	Ep:	—	—	—	—	60	—	mVac
	Degradation Rate Acceptance Tests Note 8											
4.9.5.3	Subminiature Lead Fatigue:	Note 9	2.5	Code F		4	—	—	—	—	—	arcs
4.9.20.5	Shock:	Hammer angle=30°; Ehk=±100Vdc;Rg1=0.1Meg; Note 10	20	—		—	—	—	—	—	—	—
4.9.20.6	Fatigue:	G=2.5;Fixed Frequency; F= 25 min., 60 max.	6.5	Note 5		—	—	—	—	—	—	
—	Post Shock and Fatigue Test End Points:	Vibration(2)	—	—	Ep:	—	—	—	—	200	—	mVac
		Heater-Cathode Leakage										
		Ehk=±100Vdc	—	—	Ihk:	—	—	—	—	20	—	uAdc
		Ehk=-100Vdc	—	—	Ihk:	—	—	—	—	20	—	uAdc
		Change in Transconductance(1) of individual tubes	—	—	ΔG_{m_t}:	—	—	—	—	20	—	%
—	Glass Strain:	Note 11	6.5	I		—	—	—	—	—	—	

Ref.	Test	Conditions	AQL(%)	Insp. Level or Code	Allowable Defectives per Characteristic: 1st Sample	Combined Samples	Sym.	LIMITS Min.	Max.	Units
	Acceptance Life Tests Note 8									
4.11.7	Heater Cycling Life Test:	Ef=7.0V; 1 min. on, 4 min. off;Ehk=140Vac; Ec1=Ec2=Eb=0;Note 12	2.5	Code H	—	—		—	—	
—	Stability Life Test: (1 hour)	Ehk=±200Vdc;Rg1=1.0Meg; TA=Room;Note 13	1.0	Code I	—	—		—	—	
4.11.4	Stability Life Test End Points:	Change in Transconductance(1) of individual tubes	—	—	—	—	ΔG_{m_t}:	—	10	%
—	Survival Rate Life Test:	Stability Life Test Conditions or equivalent; TA=Room;Notes 14,15	—	II	—	—		—	—	
4.11.4	Survival Rate Life Test End Points:	Continuity and Shorts (Inoperatives)	0.65	—	—	—	—	—	—	
		Transconductance(1)	1.0	—	—	—	Gm:	3750	—	umhos

Ref.	Test	Conditions	AQL(%)	Insp. Level or Code	Allowable Defectives per Characteristic		Sym.	LIMITS		Units
					1st Sample	Combined Samples		Min.	Max.	
	Acceptance Life Tests Note 8(Contd)									
4.11.5	Intermittent Life Test:	Stability Life Test Conditions;T Envelope= /220°C min;Notes 16,17; 1000 Hour Requirements do not apply	—	—	—	—	—	—	—	—
4.11.4	Intermittent Life Test End Points;(500 Hours): Note 16	Note 18								
		Inoperatives;Note 19	—	—	1	3		—	—	
		Grid Current	—	—	1	3	Icl:	0	-0.8	uAdc
		Heater Current	—	—	2	5	If:	138	164	mA
		Change in Transconductance(1) of individual tubes	—	—	1	3	Δ_t^{Sm}:	—	20	%
		Transconductance(2)	—	—	2	5	Δ_{Rf}^{Sm}:	—	15	%
		Heater-Cathode Leakage								
		Ehk=/100Vdc	—	—	2	5	Ihk:	—	10	uAdc
		Ehk=-100Vdc					Ihk:	—	10	uAdc
		Insulation of Electrodes								
		g-all	—	—	2	5	R:	50	—	Meg
		p-all	—	—			R:	50	—	Meg
		Transconductance(1) average change	—	—	—	—	Avg Δ_t^{Sm}:	—	15	%
		Total Defectives	—	—	4	8	—	—	—	—
4.11.5	Information Life Test: (1000 Hours)	Intermittent Life Test Conditions;Notes 17, 20,21								
	Packaging Information									
4.9.18.1.1	Carton Drop:	(d) Package Group 1; Carton Size C								

Caution to Electron Equipment Design Engineers. Special attention should be given to the temperature at which the tubes are to be operated. Reliability will be seriously impaired if maximum envelope temperature is exceeded. The life expectancy may be reduced if conditions other than those specified for life test are imposed on the tube and will be reduced appreciably if absolute maximum ratings are exceeded. Both reliability and performance will be jeopardized if filament voltage ratings are exceeded. Life and reliability of performance are directly related to the degree that regulation of the heater voltage is maintained at its center rated value.

Note 1: The reference point for heater-cathode (suppressor when applicable) potential shall be the positive terminal of the cathode resistor, unless otherwise specified.

Note 2: If altitude rating is exceeded, reduction of instantaneous voltages (Ef, excluded) may be required.

Note 3: The AQL for the combined defectives for attributes in Measurements Acceptance Tests, Part 1, excluding Inoperatives and Mechanical shall be one (1) percent. A tube having one (1) or more defects shall be counted as one (1) defective. MIL-STD-105, Inspection Level II shall apply.

Note 4: Variables Sampling Procedure:

Test for Lot-Average Acceptance:

Select a 35 tube sample at random from the lot. Number these tubes consecutively.

Determine the numerical average value of the characteristic specified on the specification sheet of the 35 tube sample. If this value is on or above the LAL and on or below the UAL, accept for Lot Average.

Test for Lot Dispersion Acceptance:

Divide the 35 tube sample into seven (7) consecutive sub-groups of five (5) tubes each. Determine the range, R, of each sub-group for the measured characteristic specified on the Specification Sheet.

Compute the numerical average of the R values which is equal to $\bar{R}$. If $\bar{R}$ is equal to or less than the ALD, accept for Lot Dispersion.

Note 5: This test shall be conducted on the initial lot and thereafter on a lot approximately every 30 days. Once a lot has passed, the 30-day rule shall apply. In the event of lot failure, the lot shall be rejected and the succeeding lot shall be subjected to this test. MIL-STD-105, sample size code letter F shall apply.

Note 6: There shall be no evidence of arcing or corona between anode pins and adjacent pins with no other voltages applied.

CV3929

Note 7: For vibration tests, the impedances of the plate and screen voltage supplies shall not exceed that of a 40 uf capacitor at 10 cps.

Note 8: Destructive tests:

Tubes subjected to the following destructive tests are not to be accepted under this specification

4.9.5.3	Subminiature Lead Fatigue.
4.9.20.5	Shock.
4.9.20.6	Fatigue.
4.11.7	Heater Cycling Life Test.
4.11.5	Intermittent Life Test.

Note 9: When a manufacturer submits tubes for qualification approval, five extra tubes shall be submitted for lead fatigue testing. These may be electrical rejects.

Note 10: Leads may be clipped for application of voltages during impact.

Note 11: Glass strain procedure - All tubes submitted to this shall have been sealed a minimum of 48 hours prior to conducting this test. All tubes shall be at room temperature. The entire tube shall be immersed in water not less than 85°C for 15 seconds and immediately thereafter immersed in water not more than 5°C for 5 seconds. The volume of water shall be large enough that the temperature will not be appreciably affected by the test. The method of submersion shall be in accordance with Drawing #245 JAN, and such that a minimum of heat is conducted away by the holder used. The tubes shall be placed in the water so that no contact is made with the containing vessel, nor shall the tubes contact each other. After the 5-second submersion period, the tubes shall be removed and allowed to dry at room temperature on a wooden surface. After drying at room temperature for a period of 48 hours, the tubes shall be inspected and rejected for evidence of air leaks. Electrical rejects other than inoperatives may be used in the performance of this test.

Note 12: The regulation of the heater voltage supply shall be not more than 3.0 percent. This test shall be made on a lot by lot basis. A failure or defect shall consist of an open heater, open cathode circuit, or a heater-cathode short.

Note 13: Stability Life Test:

a. Life test samples shall be selected from a lot at random in such a manner as to be representative of the lot. If such selection results in a sample containing tubes which are outside the initial specification sheet limits for the relevant life test end point characteristics, such tubes shall be replaced by randomly selected acceptable tubes.

b. Serially mark all tubes from the sample.

c. Record referenced characteristic measurements after a maximum operation of 15 minutes at specified voltage and current conditions on the entire sample.

d. Operate at life test conditions for one (1) hour (plus 30 minutes, minus 0 minutes). Life test shall be conducted as per paragraphs 4.11 and 4.11.5, MIL-E-1, except that the following shall be substituted for the third sentence of 4.11: The mean electrode potentials, except heater or filament, may be established at values differing by not more than 5% from the specified values provided the same average electrode dissipations are obtained that occur with the specified voltages. Fluctuations of all voltages including heater or filament voltage shall be as small as practical.

e. Record referenced characteristic measurements at the end of this test period. Referenced characteristic measurements shall be taken immediately following the test or tubes shall be preheated 15 minutes under specified test voltage and current conditions, and immediately measured. The 15 minutes preheat shall be considered as part of the test time.

f. A defective shall be defined as a tube having a change in referenced characteristic greater than that specified on the specification sheet.

g. A resubmitted lot must be subjected to all Measurements Acceptance Tests except Mechanical Inspection, Vibration, and Low Pressure Voltage Breakdown tests.

Note 14: MEANS OF ASSURING SURVIVAL RATE - The procedure for assuring the maintenance of a desirable quality level in terms of early life survival consists of a series of normal, reduced, and tightened inspection plans for use at 100 hours. The sample size is dependent upon lot size, and the transfer between normal, reduced, and tightened inspection is dependent upon quality history.

The selection of inspection scheme and sampling plan shall be in accordance with Inspection Instructions for Electron Tubes paragraph 5.3.4.2 through 5.3.4.3.1.3 inclusive except that paragraph 5.3.4.2.2 shall be modified by deleting the last part of the first sentence which states "....or if no lot in the last 20 lots inspected shall have been declared nonconforming for life test qualities." At the manufacturer's option, reduced inspection may be used if no lot in the last ten (10) lots inspected have been declared nonconforming.

INSPECTION PROCEDURE

a. Select sample in accordance with Note 13, paragraph (a).

b. Tubes to be tested at 100 hours as provided in MIL-E-1(4.7.5). When any tap-short indication is obtained, the test shall be repeated. When any short indication is again obtained the tube will be rejected as an inoperative.

c. Determine the number of defective tubes at the 100 hour period.

d. If more than the allowable number of defectives occur, declare the lot nonconforming.

e. A resubmitted lot must be subjected to all Measurements Acceptance Tests except Mechanical Inspection, Vibration, and Low Pressure Voltage Breakdown tests.

Note 15: For Survival Rate Life Test, the equivalent Stability Life Test conditions shall be interpreted as having the same heater voltage (Ef) and heater-cathode voltage (Ehk) as the Stability Life Test; and the same interruptions of MIL-E-1 paragraph 4.11.5 as the Intermittent Life Test. The electrode voltages shall be such that the element dissipations are not less than 80 percent, nor more than 100 percent of Stability Life Test plate dissipation. These voltages are to be maintained within the limits of plus 200, minus 50 percent of the Stability Life Test voltages.

Note 16: Intermittent Life Tests:

a. The first 20 tubes of the Stability Life Test sample which meet the measurements acceptance test limits for those characteristics specified as Intermittent Life Test End Points shall be used for the Intermittent Life Test sample. In the event that a second Stability Life Test sample is used, the first 20 tubes from that sample which meet the above conditions shall be used.

b. In the event of failure of the first sample on Intermittent Life Test, take a completely fresh sample (MIL-STD-105 sample size code letter I) and stabilize it in accordance with the conditions of the Stability Life Test. Then select from it the first 40 tubes which meet the measurements acceptance test limits for those characteristics specified as Intermittent Life Test End Points.

Subject these 40 tubes to the Intermittent Life Test. Acceptance shall then be based on combined results from the first and second samples.

c. As an alternate method, the manufacturer may select his life test sample as described in Note 13, paragraph (a).

d. Life test shall be conducted as per paragraphs 4.11, and 4.11.5, MIL-E-1, except that the following shall be substituted for the third sentence of 4.11: The mean electrode potentials, except heater or filament may be established at values differing by not more than 5% from the specified values provided the same average electrode dissipations are obtained that occur with the specified voltages. Fluctuations of all voltages including heater or filament voltage shall be as small as practical.

e. Regular Life Test

1. Regular Life test shall be conducted for 1000 hours.

2. Regular life test acceptance shall be on the basis of the 500 and 1000 hours requirements as indicated on Specification Sheet.

3. Regular life test shall be in effect initially and shall continue in effect until the eligibility criteria for the Reduced Hours Life Test have been met.

f. Reduced Hours Life Test:

1. Reduced Hours Life Test shall be conducted for 500 hours and acceptance shall be based on the 500 hour end point limits.

2. Eligibility for Reduced Hours Life Tests: No lot failure due to the 1000 hour life test has occurred in the preceding three (3) consecutive lots.

3. Loss of eligibility for Reduced Hours Life Test: Two (2) or more 500 hour life test lot failures occurring in the last three (3) consecutive lots.

g. The life test sample shall be read at the following times:

0 hours
500 hours (plus 48 hours; minus 24 hours)
1000 hours (plus 48 hours; minus 24 hours; when in force)

Additional reading periods may be used at the discretion of the electron tube manufacturer.

h. Acceptance Criteria: The lot shall be considered satisfactory for acceptance provided that the specified allowable defects are not exceeded and the change of the average of any characteristic in the life test sample specified for life test control of averages is not exceeded. The average percentage change shall be ascertained from the determination of the individual changes for each tube in the life test sample from the zero (0) hour value for the referenced characteristic or characteristics. For purposes of computation of this average percentage change, the absolute values of the individual changes for each tube in the life test sample shall be used. Any tube found inoperative during life testing shall not be considered in the calculation of this average.

i. A resubmitted lot must be subjected to all Measurements Acceptance Tests except Mechanical Inspection, Vibration, and Low Pressure Voltage Breakdown.

j. Not more than one (1) accidental breakage shall be allowed in the life test sample. In the event that one (1) life test tube is accidentally broken, acceptability of the life test sample shall be based upon the remaining tubes in the sample provided that the broken tube was not known to be a defective.

Note 17: Envelope Temperature is defined as the highest temperature indicated when using a thermocouple of #40 BS or smaller diameter elements welded to a ring of .025 inch diameter phosphor bronze placed in contact with the envelope.

Note 18: Order for evaluation of life test defects.- If a tube is defective for more than one attribute characteristic, the characteristic appearing first in the Life Test End Points shall constitute the failure.

Note 19: An inoperative as referenced in Life Test is defined as a tube having one (1) or more of the following defects: discontinuity (Ref. MIL-E-1, par. 4.7.1), shorts (Ref. MIL-E-1, par. 4.7.2), air leaks.

Note 20: On Information Life Tests, read same characteristics as Intermittent Life Test. Limits do not apply. Six copies of these data shall be forwarded to the Armed Services Electron Tube Committee upon request.

CV3929

Note 21: This life test shall be conducted on a minimum of one sample of ten tubes each month of production. This sample shall be selected as the first ten serially marked, noninoperative tubes from a completed Intermittent Life Test sample. This life test shall be classified as a destructive test. Read at 1000 hours.

Note 22: Types 5840 and 6205 are the same except for suppressor grid and cathode connections. The Ec3 column in the heading applies only to type 6205. Type 6205 has not been designed for control or gating purposes using the number 3 grid.

Note 23: Transconductance(2) is the percent change in Transconductance(1) of an individual tube resulting from the change in Ef.

Note 24: Prior to this test tubes shall be preheated 5 minutes at conditions indicated below. Test within three seconds after preheating. Three-minute test is not permitted. Grid Emission shall be the last test performed on the sample selected for the Grid Emission test.

Ef V	Ec1 Vdc	Ec2 Vdc	Ec3 Vdc	Eb Vdc	Rk ohms	Rg1 Meg
7.5	0	100	0	100	150	1.0

Note 25: Reference specification shall be of the issue in effect on the date of invitation for bid.

MINISTRY OF SUPPLY D.L.R.D./R.A.E.

Valve Electronic **CV3930**

SPECIFICATION MOS/CV.3930 incorporating MIL-E-1/172B. ISSUE No. 1. DATED 1.2.58. To be read in conjunction with K1006 and BS.448.	SECURITY	
	SPECIFICATION	VALVE
	Unclassified	Unclassified

TYPE OF VALVE:- Sub-miniature Triode Oscillator with flying leads.

CATHODE:- Indirectly heated.

ENVELOPE:- Glass.

PROTOTYPE:- 5718

MARKING

See K1001/4.

Additional Marking 5718.

RATINGS

(All limiting values are absolute)

			NOTES
Heater Volts	(V)	6.3	
Heater Current	(mA)	150	
Max. Operating Anode Voltage	(V)	165	
Max. Anode Dissipation	(W)	0.9	
Max. Negative Grid Voltage	(V)	55	
Max. Anode Current	(mA)	22	
Max. Heater Cathode Voltage	(V)	200	
Max. Bulb Temperature	(°C)	220	
Typical Operating Conditions			
Anode Voltage	(V)	100	
Anode Current	(mA)	8.5	
Mutual Conductance	(mA/V)	5.8	
Amplification Factor		27	

BASE

BS.448/B8D/F.

CONNECTORS

PIN	ELECTRODE	
1	Grid	g
2	No connection	
3	Heater	h
4	No connection	
5	Cathode	k
6	Heater	h
7	No connection	
8	Anode	a

CAPACITANCES(pF) NOTE A

Cag (nom.)	1.45
Cin (nom.)	2.2
Cout (nom.)	0.7

DIMENSIONS(mm)

DIMENSIONS	MIN.	MAX.
"A" Seated Height		34.92
"C" Diam.	9.3	10.16

NOTES

A. Without screen.

CV 3930

MIL-E-1/172B
5 August 1955
SUPERSEDING
MIL-E-1/172A
26 October 1954

INDIVIDUAL MILITARY SPECIFICATION SHEET

ELECTRON TUBE, RECEIVING, TRIODE. SUBMINIATURE

JAN-5718

This specification sheet forms a part of the latest issue of Military Specification MIL-E-1.

Description: Triode, 500 Mc, Medium Mu

Ratings:	Ef	Eb	Ec	Ehk	Rk	Rg	Ib	Ic	Pp	T Envelope	Alt
Absolute	V	Vdc	Vdc	v	ohms	Meg	mAdc	mAdc	W	°C	ft
Maximum:	6.6	165	0	200	—	1.2	22.0	5.5	0.9	+220	60,000 Note 2
Minimum:	6.0	—	-55	—	—	—	—	—	—	—	—
Test Cond.:	6.3	100	0	0 Note 1	150 Note 1	—	—	—	—	—	—

Cathode: Coated Unipotential
Base: Subminiature-8 Pin with long leads

Diameter: 0.400 in. max.
Height: 1.375 in. max.

Pin No.:	1	2	3	4	5	6	7	8
Element:	g	nc	h	nc	k	h	nc	p

Envelope: T-3

The following tests shall be performed:
For the purposes of inspection, use applicable reliable paragraphs of MIL-E-1 and Inspection Instructions for Electron Tubes.
For miscellaneous requirements, see Paragraph 3.3, Inspection Instructions for Electron Tubes.

Ref.	Test	Conditions	AQL(%)	Insp. Level or Code	Sym.	LIMITS Min.	LAL	Bogie	UAL	Max.	ALD	Units
	Qualification Approval Tests											
3.1	Qualification Approval:	Required for JAN Marking	—	—								
—	Cathode:	Coated Unipotential	---	---								
3.4.3	Base Connections:		—	—								
	Measurements Acceptance Tests, Part 1, Note 3											
4.10.8	Heater Current:	Note 4	—	—	If:	—	144	150	156	—	12	mA
4.10.8	Heater Current:		0.65	II	If:	140	—	—	—	160		mA
4.10.15	Heater-Cathode Leakage:	Ehk=+100Vdc Ehk=-100Vdc	0.65	II	Ihk: Ihk:	— —	— —	— —	— —	5 5	— —	uAdc uAdc
4.10.6.1	Grid Current:	Eb=150Vdc;Rk=380; Rg=1.0Meg	0.65	II	Ic:	0	—	—	—	-0.4	—	uAdc
4.10.4.1	Plate Current(1):	Note 4	—	—	Ib:	—	7.5	8.5	9.5	—	3.0	mAdc
4.10.4.1	Plate Current(1):		0.65	II	Ib:	6.0	—	—	—	11.0	—	mAdc
4.10.4.1	Plate Current(2):	Ec=-7.0Vdc;Rk=0	0.65	II	Ib:	—	—	—	—	100	—	uAdc
4.10.9	Transconductance(1):	Note 4	—	—	Sm:	—	5400	5800	6200	—	1150	umhos
4.10.9	Transconductance(1):		0.65	II	Sm:	4800	—	—	—	6800	—	umhos
4.7.5	Continuity and Shorts (Inoperatives):		0.4	II	—	—	—	—	—	—	—	
4.9.1	Mechanical:	Envelope (8-1)										
	Measurements Acceptance Tests, Part 2											
4.8.2	Insulation of Electrodes:	g-all p-all	2.5	I	R: R:	100 100	— —	— —	— —	— —	— —	Meg Meg
4.10.4.1	Plate Current(3):	Ec=-4.0Vdc;Rk=0	2.5	I	Ib:	20	—	—	—	—	—	uAdc
4.10.9	Transconductance(2):	Ef=5.7V;Note 22	2.5	I	$\Delta \frac{Sm}{Ef}$:	—	—	—	—	10	—	%
4.10.6.2	Grid Emission:	Ef=7.5V;Ec=-7.0Vdc; Rg=1.0Meg;Note 23	2.5	I	Ic:	0	—	—	—	-0.4	—	uAdc

CV3930

Ref.	Test	Conditions	AQL(%)	Insp. Level or Code	Sym.	Min.	LAL	Bogie	UAL	Max.	ALD	Units
	Measurements Acceptance Tests Part 2(Contd)											
4.10.3.2	AF Noise:	Esig=50mVac;Ec=-4.0Vdc; Rk=0;Rg=0.1Meg;Rp=0.01 Meg	2.5	I	EB:	—	—	—	—	17	—	VU
4.10.11.1	Amplification Factor:		6.5	1A	Mu:	23	—	—	—	31	—	
4.10.2.2	Power Oscillation:	F=500Mc;Eb=150Vdc; Rg/Ib=20mAdc	6.5	1A	Po:	600	—	—	—	—	—	mW
4.10.14	Capacitance:	No Shield			Cgp:	1.1	—	—	—	1.8	—	uuf
		No Shield	6.5	Code	Cin:	1.6	—	—	—	2.8	—	uuf
		No Shield		F	Cout:	0.5	—	—	—	0.9	—	uuf
—	Low Pressure Voltage Breakdown:	Pressure=55±5mm Hg.; Voltage=300Vac;Note 6	6.5	Note 5	—	—	—	—	—	—	—	
4.9.20.3	Vibration(1):	No Voltages;Post Shock and Fatigue Test End Points apply	10.0	Note 5		—	—	—	—	—	—	
4.9.19.1	Vibration(2):	Rp=10,000;Ck=1000uf; F=40cps;G=15;Note 7	2.5	I	Ep:	—	—	—	—	25	—	mVac
	Degradation Rate Acceptance Tests Note 8											
4.9.5.3	Subminiature Lead Fatigue:	Note 9	2.5	Code F	—	4	—	—	—	—	—	arcs
4.9.20.5	Shock:	Hammer angle=30°; Ehk=+100Vdc;Rg=0.1Meg; Note 10	20	—	—	—	—	—	—	—	—	
4.9.20.6	Fatigue:	G=2.5;Fixed Frequency; F=25min., 60max.	6.5	Note 5	—	—	—	—	—	—	—	
—	Post Shock and Fatigue Test End Points:	Vibration(2)	—	—	Ep:	—	—	—	—	100	—	mVac
		Heater-Cathode Leakage										
		Ehk=+100Vdc	—	—	Ihk:	—	—	—	—	15	—	uAdc
		Ehk=-100Vdc	—	—	Ihk:	—	—	—	—	15	—	uAdc
		Change in Transconductance(1) of individual tubes	—	—	Δ_t^{Sm}:	—	—	—	—	15	—	%
—	Glass Strain:	Note 11	6.5	I	—	—	—	—	—	—	—	

Ref.	Test	Conditions	AQL(%)	Insp. Level or Code	Allowable Defectives per Characteristic		Sym.	LIMITS		Units
					1st Sample	Combined Samples		Min.	Max.	
	Acceptance Life Tests Note 8									
4.11.7	Heater Cycling Life Test:	Ef=7.0V;1 min. on, 4 min. off;Ehk=140Vac; Ec=Eb=0;Note 12	2.5	Code H	—	—	—	—	—	
—	Stability Life Test: (1 Hour)	Ehk=+200Vdc;Rg=1.0Meg; TA=Room;Note 13	1.0	Code I	—	—	—	—	—	
4.11.4	Stability Life Test End Points:	Change in Transconductance(1) of individual tubes	—	—	—	—	Δ_t^{Sm}:	—	10	%
—	Survival Rate Life Test:	Stability Life Test Conditions or equivalent; TA=Room;Notes 14,15	—	II	—	—	—	—	—	
4.11.4	Survival Rate Life Test End Points:	Continuity and Shorts (Inoperatives)	0.65	—	—	—	—	—	—	
		Transconductance(1)	1.0	—	—	—	Sm:	4500	—	umhos

Ref.	Test	Conditions	AQL(%)	Insp. Level or Code	Allowable Defectives per Characteristic		Sym.	LIMITS		Units
					1st Sample	Combined Samples		Min.	Max.	
	Acceptance Life Tests(Contd)									
4.11.5	Intermittent Life Test:	Stability Life Test Conditions;T Envelope= +220°C min;Notes 16,17; 1000 hour requirements do not apply	—	—	—	—	—	—	—	
4.11.4	Intermittent Life Test End Points; (500 Hours): Note 16	Note 18								
		Inoperatives;Note 19	—	—	1	3	—	—		
		Grid Current	—	—	1	3	Ic:	0	-0.6	uAdc
		Heater Current	—	—	2	5	If:	138	164	mA
		Change in Transconductance(1) of individual tubes	—	—	1	3	Δ_t^{Sm}:	—	20	%
		Transconductance(2)	—	—	2	5	Δ_{Hf}^{Sm}:	—	15	%
		Heater-Cathode Leakage								
		Ehk=+100Vdc	—	—	2	5	Ihk:	—	10	uAdc
		Ehk=-100Vdc					Ihk:	—	10	uAdc
		Insulation of Electrodes								
		g-all	—	—	2	5	R:	50	—	Meg
		p-all					R:	50	—	Meg
		Transconductance(1) average change	—	—	—	—	Avg. Δ_t^{Sm}:	—	15	%
		Total Defectives	—	—	4	8	—	—	—	
4.11.5	Information Life Test: (1000 Hours)	Intermittent Life Test Conditions;Notes 17,20, 21								
	Packaging Information									
4.9.18.1.1	Carton Drop:	(d) Package Group 1; Carton Size C								

Caution to Electron Equipment Design Engineers. Special attention should be given to the temperature at which the tubes are to be operated. Reliability will be seriously impaired if maximum bulb temperature is exceeded. The life expectancy may be reduced if conditions other than those specified for life test are imposed on the tube and will be reduced appreciably if absolute maximum ratings are exceeded. Both reliability and performance will be jeopardized if filament voltage ratings are exceeded. Life and reliability of performance are directly related to the degree that regulation of the heater voltage is maintained at its center rated value.

Note 1: The reference point for heater-cathode potential shall be the positive terminal of the cathode resistor, unless otherwise specified.

Note 2: If altitude rating is exceeded, reduction of instantaneous voltages (Ef, excluded) may be required.

Note 3: The AQL for the combined defectives for attributes in Measurements Acceptance Tests, Part 1, excluding inoperatives and mechanical shall be one (1) percent. A tube having one (1) or more defects shall be counted as one (1) defective. MIL-STD-105, Inspection Level II shall apply.

Note 4: Variables Sampling Procedure:

Test for Lot-Average Acceptance:

Select a 35 tube sample at random from the lot. Number these tubes consecutively.

Determine the numerical average value of the characteristic as specified on the specification sheet of the 35 tube sample. If this value is on or above the LAL and on or below the UAL, accept for Lot Average.

Test for Lot Dispersion Acceptance:

Divide the 35 tube sample into seven (7) consecutive sub-groups of five (5) tubes each. Determine the range, R, of each sub-group for the measured characteristic specified on the Specification Sheet.

Compute the numerical average of the R values which is equal to $\bar{R}$. If $\bar{R}$ is equal to or less than the ALD, accept for Lot Dispersion.

Note 5: This test shall be conducted on the initial lot and thereafter on a lot approximately every 30 days. Once a lot has passed, the 30-day rule shall apply. In the event of lot failure, the lot shall be rejected and the succeeding lot shall be subjected to this test. MIL-STD-105, sample size code letter F shall apply.

Note 6: There shall be no evidence of arcing or corona between anode pins and adjacent pins with no other voltages applied.

Note 7: For vibration tests, the impedance of the plate voltage supply shall not exceed that of a 40 uf capacitor at 10 cps.

Note 8: Destructive tests:

Tubes subjected to the following destructive tests are not to be accepted under this specification

4.9.5.3	Subminiature Lead Fatigue.
4.9.20.5	Shock.
4.9.20.6	Fatigue.
4.11.7	Heater Cycling Life Test.
4.11.5	Intermittent Life Test.

Note 9: When a manufacturer submits tubes for qualification approval, five extra tubes shall be submitted for lead fatigue testing. These may be electrical rejects.

Note 10: Leads may be clipped for application of voltages during impact.

Note 11: Glass strain procedures - All tubes submitted to this shall have been sealed a minimum of 48 hours prior to conducting this test. All tubes shall be at room temperature. The entire tube shall be immersed in water not less than 85°C for 15 seconds and immediately thereafter immersed in water not more than 5°C for 5 seconds. The volume of water shall be large enough that the temperature will not be appreciably affected by the test. The method of submersion shall be in accordance with Drawing #245 JAN, and such that a minimum of heat is conducted away by the holder used. The tubes shall be placed in the water so that no contact is made with the containing vessel, nor shall the tubes contact each other. After the 5-second submersion period, the tubes shall be removed and allowed to dry at room temperature on a wooden surface. After drying at room temperature for a period of 48 hours, the tubes shall be inspected and rejected for evidence of air leaks. Electrical rejects other than inoperatives may be used in the performance of this test.

Note 12: The regulation of the heater voltage supply shall be not more than 3.0 percent. This test shall be made on a lot by lot basis. A failure or defect shall consist of an open heater, open cathode circuit, or a heater-cathode short.

Note 13: Stability Life Test:

a. Life test samples shall be selected from a lot at random in such a manner as to be representative of the lot. If such selection results in a sample containing tubes which are outside the initial specification sheet limits for the relevant life test end point characteristics, such tubes shall be replaced by randomly selected acceptable tubes.

b. Serially mark all tubes from the sample.

c. Record referenced characteristic measurements after a maximum operation of 15 minutes at specified voltage and current conditions on the entire sample.

d. Operate at life test conditions for one (1) hour (plus 30 minutes, minus 0 minutes). Life test shall be conducted as per paragraphs 4.11 and 4.11.5, MIL-E-1, except that the following shall be substituted for the third sentence of 4.11: The mean electrode potentials, except heater or filament, may be established at values differing by not more than 5% from the specified values provided the same average electrode dissipations are obtained that occur with the specified voltages. Fluctuations of all voltages including heater or filament voltage shall be as small as practical.

e. Record referenced characteristic measurements at the end of this test period. Referenced characteristic measurements shall be taken immediately following the test or tubes shall be preheated 15 minutes under specified test voltage and current conditions, and immediately measured. The 15 minutes preheat shall be considered as part of the test time.

f. A defective shall be defined as a tube having a change in referenced characteristic greater than that specified on the specification sheet.

g. A resubmitted lot must be subjected to all Measurements Acceptance Tests except Mechanical Inspection, Vibration, and Low Pressure Voltage Breakdown tests.

Note 14: MEANS OF ASSURING SURVIVAL RATE - The procedure for assuring the maintenance of a desirable quality level in terms of early life survival consists of a series of normal, reduced, and tightened inspection plans for use at 100 hours. The sample size is dependent upon lot size, and the transfer between normal, reduced, and tightened inspection is dependent upon quality history.

The selection of inspection scheme and sampling plan shall be in accordance with Inspection Instructions for Electron Tubes paragraph 5.3.4.2 through 5.3.4.3.1.3 inclusive except that paragraph 5.3.4.2.2 shall be modified by deleting the last part of the first sentence which states"....or if no lot in the last 20 lots inspected shall have been declared nonconforming for life test qualities." At the manufacturer's option, reduced inspection may be used if no lot in the last ten (10) lots inspected have been declared nonconforming.

INSPECTION PROCEDURE

a. Select sample in accordance with Note 13, paragraph (a).

b. Tubes to be tested at 100 hours as provided in MIL-E-1(4.7.5). When any tap-short indication is obtained, the test shall be repeated. When any short indication is again obtained the tube will be rejected as an inoperative.

c. Determine the number of defective tubes at the 100 hour period.

Note 14: (Contd)

d. If more than the allowable number of defectives occur, declare the lot nonconforming.

e. A resubmitted lot must be subjected to all Measurements Acceptance Tests except Mechanical Inspection, Vibration, and Low Pressure Voltage Breakdown tests.

Note 15: For Survival Rate Life Test, the equivalent Stability Life Test conditions shall be interpreted as having the same heater voltage (Ef) and heater-cathode voltage (Ehk) as the Stability Life Test; and the same interruptions of MIL-E-1 paragraph 4.11.5 as the Intermittent Life Test. The electrode voltages shall be such that the element dissipations are not less than 80 percent, nor more than 100 percent of Stability Life Test Plate Dissipation. These voltages are to be maintained within the limits of plus 200, minus 50 percent of the Stability Life Test voltages.

Note 16: Intermittent Life Tests:

a. The first 20 tubes of the Stability Life Test sample which meet the measurements acceptance test limits for those characteristics specified as Intermittent Life Test End Points shall be used for the Intermittent Life Test sample. In the event that a second Stability Life Test sample is used, the first 20 tubes from that sample which meet the above conditions shall be used.

b. In the event of failure of the first sample on Intermittent Life Test, take a completely fresh sample(MIL-STD-105 sample size code letter I) and stabilize it in accordance with the conditions of the Stability Life Test. Then select from it the first 40 tubes which meet the measurements acceptance test limits for those characteristics specified as Intermittent Life Test End Points.
Subject these 40 tubes to the Intermittent Life Test. Acceptance shall then be based on combined results from the first and second samples.

c. As an alternate method, the manufacturer may select his life test sample as described in Note 13, paragraph (a).

d. Life test shall be conducted as per paragraphs 4.11, and 4.11.5, MIL-E-1, except that the following shall be substituted for the third sentence of 4.11: The mean electrode potentials, except heater or filament may be established at values differing by not more than 5% from the specified values provided the same average electrode dissipations are obtained that occur with the specified voltages. Fluctuations of all voltages including heater or filament voltage shall be as small as practical.

e. Regular Life Test

1. Regular Life test shall be conducted for 1000 hours.

2. Regular life test acceptance shall be on the basis of the 500 and 1000 hours requirements as indicated on Specification Sheet.

3. Regular life test shall be in effect initially and shall continue in effect until the eligibility criteria for the Reduced Hours Life Test have been met.

f. Reduced Hours Life Test:

1. Reduced Hours Life Test shall be conducted for 500 hours and acceptance shall be based on the 500 hour end point limits.

2. Eligibility for Reduced Hours Life Tests: No lot failure due to the 1000 hour life test has occurred in the preceding three(3) consecutive lots.

3. Loss of eligibility for Reduced Hours Life Test: Two (2) or more 500 hour life test lot failures occurring in the last three (3) consecutive lots.

g. The life test sample shall be read at the following times:

0 hours
500 hours (plus 48 hours; minus 24 hours)
1000 hours (plus 48 hours; minus 24 hours; when in force)

Additional reading periods may be used at the discretion of the electron tube manufacturer.

h. Acceptance Criteria: The lot shall be considered satisfactory for acceptance provided that the specified allowable defects are not exceeded and the change of the average of any characteristic in the life test sample specified for life test control of averages is not exceeded. The average percentage change shall be ascertained from the determination of the individual changes for each tube in the life test sample from the zero (0) hour value for the referenced characteristic or characteristics. For purposes of computation of this average percentage change, the absolute values of the individual changes for each tube in the life test sample shall be used. Any tube found inoperative during life testing shall not be considered in the calculation of this average.

i. A resubmitted lot must be subjected to all Measurements Acceptance Tests except Mechanical Inspection, Vibration, and Low Pressure Voltage Breakdown.

j. Not more than one (1) accidental breakage shall be allowed in the life test sample. In the event that one (1) life test tube is accidentally broken, acceptability of the life test sample shall be based upon the remaining tubes in the sample provided that the broken tube was not known to be a defective.

Note 17: Envelope Temperature is defined as the highest temperature indicated when using a thermocouple of #40 BS or smaller diameter elements welded to a ring of .025 inch diameter phosphor bronze placed in contact with the envelope.

Note 18: Order for evaluation of life test defects.- In the event that a tube is defective for more than one attribute characteristic, the characteristic appearing first in the Life Test End Points shall constitute the failure.

Note 19: An inoperative as referenced in Life Test is defined as a tube having one (1) or more of the following defects: Discontinuity (Ref. MIL-E-1, par. 4.7.1), shorts (Ref. MIL-E-1, par. 4.7.2), air leaks.

CV3930

Note 20: On Information Life Tests, read same characteristics as Intermittent Life Test. Limits do not apply. Six copies of these data shall be forwarded to the Armed Services Electron Tube Committee upon request.

Note 21: This life test shall be conducted on a minimum of one sample of ten tubes each month of production. This sample shall be selected as the first ten serially marked, noninoperative tubes from a completed Intermittent Life Test sample. This life test shall be classified as a destructive test. Read at 1000 hours.

Note 22: Transconductance (2) is the percent change in Transconductance (1) of an individual tube resulting from the change in Ef.

Note 23: Prior to this test tubes shall be preheated 5 minutes at conditions indicated below. Test within three (3) seconds after preheating. Three-minute test is not permitted. Grid Emission shall be the last test performed on the sample selected for the Grid Emission test.

Ef V	Ec Vdc	Eb Vdc	Rk ohms	Rg Meg
7.5	0	100	150	1.0

Note 24: Reference specification shall be of the issue in effect on the date of invitation for bid.

MINISTRY OF SUPPLY - DLRD/RRE

VALVE ELECTRONIC CV3946

Specification MOS/CV3946
Issue 1 Dated 12th May, 1959
To be read in conjunction with K1006

SECURITY	
Specification	Valve
UNCLASSIFIED	UNCLASSIFIED

Indicates a change ←

TYPE OF VALVE - Cathode Ray Tube
DEFLECTION - Electrostatic
FOCUS - Electrostatic
CATHODE - Indirectly Heated
PROTOTYPE - 3WP1
SCREEN - GG5

MARKING

See K1001/4
Add 3WP1

BASE

BS448/B12A

RATINGS AND CHARACTERISTICS

All limiting values are absolute

			Note
Heater Voltage	(V)	6.3	
Heater Current	(A)	0.6	
Max Anode 1 + 3 Voltage	(KV)	2.75	
Min Anode 1 + 3 Voltage	(KV)	1.0	
Max Negative Grid Voltage	(V)	200	
Max Heater-cathode Voltage	(V)	±180	
Max Altitude	(ft)	30,000	

CAPACITANCE (pF)

		min	max
Cathode /All	Ck/R	-	5.7
Grid 1/All	Cg1/R	-	8.7
X1/X2	Cx1/x2(R)	-	3.3
Y1/Y2	Cy1/y2(R)	-	2.2
X1/All except X2	Cx1/R(x2)	-	7.2
X2/All except X1	Cx2/R(x1)	-	7.2
Y1/All except Y2	Cy1/R(y2)	-	4.8
Y2/All except Y1	Cy2/R(y1)	-	4.8

CONNECTIONS

(A41)

Pin	Electrode	
1	Heater	h
2	Grid	g
3	Cathode	k
4	Anode 1	a1
5	Internally Connected	IC
6	X Plate 1	X1
7	X Plate 2	X2
8	Anode 1 + 3	a1 + a3
9	Y Plate 2	Y2
10	Y Plate 1	Y1
11	Internally Connected	IC
12	Heater	h

DIMENSIONS

See drawing on page 3.

NOTES

MIL-E-1/267B
22 October 1957
SUPERSEDING
MIL-E-1/267A
20 November 1953

CV3946

INDIVIDUAL MILITARY SPECIFICATION SHEET

ELECTRON TUBE, CATHODE RAY, ELECTROSTATIC DEFLECTION AND FOCUS

JAN-3WP1

This specification sheet forms a part of the latest issue of Military Specification MIL-E-1.

Ratings:	Ef	Ecl	ed	Ebl	Eb2	Rg	Zd	Ehk	Alt.
Absolute	V	Vdc	vdc	Vdc	Vdc	Meg	Meg	Vdc	ft.
Maximum	6.3±10%	0	550	1100	2750	1.5	1.0	±180	30,000
Minimum	—	-200	—	—	1000	—	—	—	

Test Cond.: 6.3 Adjust Focus 1500

Fluorescent Color: Per phosphor **Persistence: Per phosphor

For miscellaneous requirements, see Par. 3.3, Inspection Instructions for Electron Tubes.

Ref.	Test	Conditions		Min.	Max.
3.1	Qualification Approval:	Required for JAN Marking			
4.9.2.1	Dimensions:				
4.6.1	Preheating:				
4.5	Holding Period:				
4.9.18.1.2	Container Drop:	(i) Package Group 4; Carton Size P			
4.10.8	*Heater Current:		If:	540	660 mA
4.12.1.1	*Anode No. 1 Current:	Ecl=0	Ibl:	-15	10 uAdc
4.12.1.1	*Cathode Current:	Light=7 ft.L.	Ik:	—	1000 uAdc
4.12.1.2	Voltage Breakdown:				
4.12.1.3	Voltage Breakdown:	7.0 ft.L.			
4.12.2.1	† Gas "Cross":	Light=[illegible].			
4.9.12.1	**Low-pressure Voltage Breakdown:	Note 4			
4.12.3.1	*Base Alinement:	+1D2, Pin No. 3			
4.12.3.7	*Angle Between Traces:			89	91 Degrees
4.12.3.4	**Alinement, Neck and Bulb:		Diam.:	—	1.63 Inches
4.12.3.5	*Alinement, Base and Neck:				
4.12.4.1	**Cathode Illumination:				
4.12.4.2	*Stray Emission:	Eb2=2750Vdc			
4.12.5.1	Blemishes:				
4.12.5.2	† Light Output:		Light:	7	ft.L.
4.12.5.3	*Modulation:	Light=7 ft.L.	ΔEc:	—	50 Vdc

CV3946

Ref.	Test	Conditions		Min.	Max.
4.12.6.1	*Line Width "A":	Light=7 ft.L	Width:	---	.65 mm
4.12.6.1	*Line Width "B":	Light=7 ft.L.	Width:	---	.75 mm
4.12.7.2	Spot Position:			---	10 mm
4.12.7.3	Spot Displacement:		Displ.:	---	7 mm
4.12.9	Grid Cutoff Voltage:		Eco:	-45	-75 Vdc
4.12.10.2	*Focusing Voltage:		Eb1:	247	465 Vdc
4.12.11	*Deflection Factor:	1D2	DF:	62	76 Vdc/in.
4.12.11	*Deflection Factor:	3D4	DF:	43	52 Vdc/in.
4.12.12	**Deflection Factor Uniformity:			---	2%
4.12.13.1	*Heater-cathode Leakage:				
4.12.13.2	Grid No. 1 Leakage:				
4.12.13.5	Anode No. 2 Leakage:				
4.10.14	**Capacitances:	g1 to all	C:	---	8.7 uuf
		k to all	C:	---	5.7 uuf
		D1 to D2	C:	---	3.3 uuf
		D3 to D4	C:	---	2.0 uuf
		D1 to all except D2	C:	---	7.2 uuf
		D2 to all except D1	C:	---	7.2 uuf
		D3 to all except D4	C:	---	4.8 uuf
		D4 to all except D3	C:	---	4.8 uuf
4.9.11	**Pressure:				
4.9.19.8	**Vibration:		Width:	---	1 mm
4.11.1.2	Life Test:	Group D; Light=7 ft.L Eb2=2750Vdc	t:	500	--- hrs
4.11.4	Life Test End Point:	Light=5½ ft.L.			
	Line Width "A"		Width:	---	.65 mm
	Line Width "B"		Width:	---	.75 mm
	Modulation		Δ Ec:	---	50 Vdc
4.9.5	Torque:				
- - -	Useful Scan:	Focused Trace; Note 2			
		1D2 Scan		2.50	--- in.
		3D4 Scan		2.25	--- in.
- - -	Pattern Distortion:	Note 3			

Note 1: The construction of this tube shall be of the "zero Ib1" type and must be approved by a Service Laboratory prior to shipment of tubes. The following information and materials are to be forwarded with the four samples when application for qualification approval is made:
(1) The gun drawing with significant dimensions
(2) A sample of the gun to be used in manufacture of the tubes

Note 2: 1D2 Scan ± 1.25 in. minimum from tube face center. 3D4 Scan ±1.125 in. minimum from tube face center.

Note 3: With a raster pattern the size of which is adjusted so that the widest points of the pattern just touch the sides of a square, 2.050 inches on a side, no point on these pattern sides will lie within an inscribed square, 1.950 inches on a side.

Note 4: The test is made with maximum voltage applied to the base pins and/or deflection electrodes only and pressure of 30,000 feet (225 mmHg). Connections should be made in a manner that does not degrade the tube's electrical voltage breakdown characteristics. Satisfactory operation is the absence of arc-over and corona.

Note 5: Reference specification shall be of the issue in effect on date of invitation for bid.

CV3946

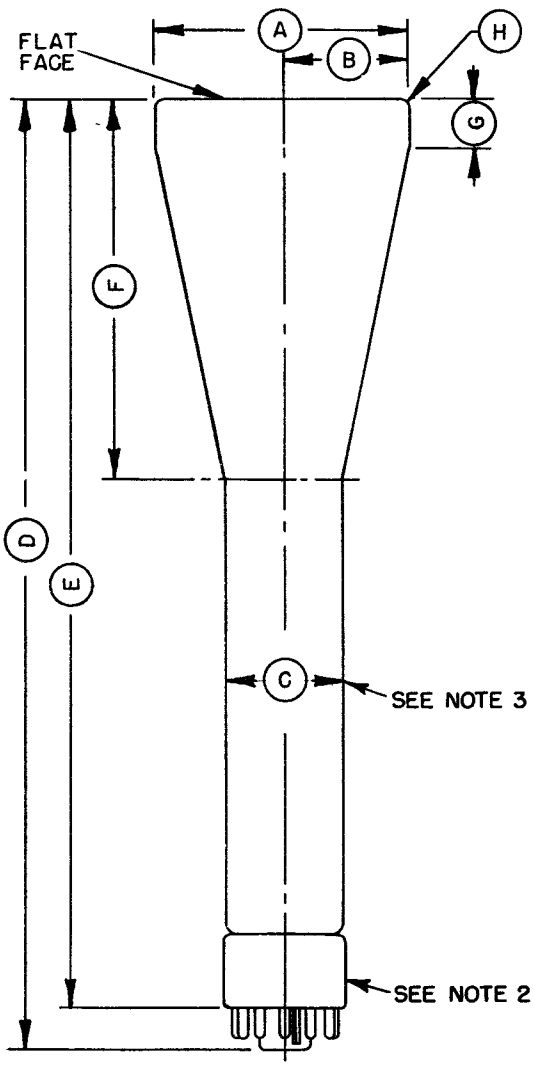

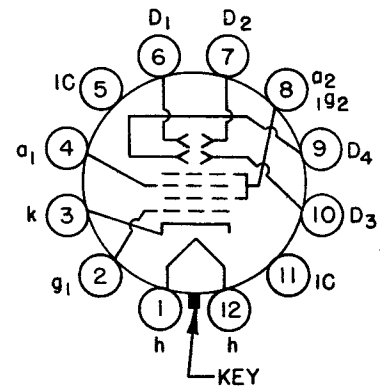

REF	DIMENSION
A	$3 \pm \frac{1}{16}$
B	NOTE 1
C	$1\frac{3}{8} \pm \frac{1}{16}$
D	$11\frac{1}{2} \pm \frac{1}{8}$
E	10.97
F	$4\frac{9}{16} \pm \frac{1}{4}$
G	$\frac{9}{16}$
H	$\frac{1}{16}$ R

Note 1: The minimum useful screen radius shall not be less than 1-3/8 inches.
Note 2; The base shall be a small shell duodecal 12- pin (B12-43).
Note 3: The bulb shall be a ∪24R type.
Note 4: All dimensions are in inches.

MINISTRY OF SUPPLY D.L.R.D./R.A.E.

VALVE ELECTRONIC **C.V.3986**

SPECIFICATION MOSA/CV.3986 incorporating MIL-E-1/188B ISSUE NO. 1 DATED 15.5.57 To be read in conjunction with K.1006.	SECURITY SPECIFICATION | VALVE

TYPE OF VALVE - Subminiature Double Triode with flying leads.

CATHODE - Indirectly heated.

ENVELOPE - Glass.

PROTOTYPE - 6021.

MARKING

See K.1001/4.

Additional Marking 6021

RATING
(All limiting values are absolute)

		NOTES
Heater Volts (V)	6.3	
Heater Current (mA)	300	
Max. Operating Anode Voltage (V)	165	
Max. Anode Dissipation (W)	0.7	A
Max. Negative Grid Voltage (V)	55	A
Max. Peak Anode Current (mA)	22	A
Max. Peak Grid Current (mA)	5.5	A
Max. Heater-Cathode Voltage (V)	200	
Max. Bulb Temperature (°C)	220	
Typical Operating Conditions Note A.		
Anode Voltage (V)	100	
Anode Current (mA)	6.5	
Mutual Conductance (mA/V)	5.4	
Amplification Factor	35	
Capacitances (pF)		
Cag (nom.)	1.5	A,B
Cin (nom.)	2.4	A,B
Cout (section 1) (nom.)	0.28	B
Cout (section 2) (nom.)	0.32	B
Ca' a" (max.)	0.52	B
Cg' g" (max.)	0.013	B

BASE

BS.448/B8D/F

CONNECTIONS

LEAD	ELECTRODE	
1	Anode (2)	a"
2	Grid (2)	g"
3	Heater	h
4	Cathode (2)	k"
5	Cathode (1)	k'
6	Heater	h
7	Grid (1)	g'
8	Anode (1)	a'

DIMENSIONS (mm)

Dimensions	Min.	Max.
"A" Seated Height (mm)	-	34.92
"C" Dia.	9.3	10.16

NOTES

A. Each section.

B. Without screen.

Z.14492.R.

CV3986

MIL-E-1/188B
23 August 1955
SUPERSEDING
MIL-E-1/188A
26 October 1954

INDIVIDUAL MILITARY SPECIFICATION SHEET

ELECTRON TUBE, RECEIVING, TWIN TRIODE, SUBMINIATURE

JAN-6021

This specification sheet forms a part of the latest issue of Military Specification MIL-E-1.

Description: Twin Triode, Medium Mu

Ratings:	Ef V	Eb Vdc	Ec Vdc	Ebk v	Rk/k ohms	Pg/g Mw	Ib/b mAdc	Ic/c mAdc	Pp/p W	T Envelope oC	Alt ft
Absolute Maximum:	6.6	165	0	200	---	1.1	22	5.5	0.7	/220	60,000 Note 2
Minimum:	6.0	---	-55	---	---	---	---	---	---	---	---
Test Cond.:	6.3	100	0	--- Note 1	150 Note 1	---	---	---	---	---	---

Cathode: Coated Unipotential
Base: Subminiature - 8 Pin with long leads

Diameter: 0.400 in. max.
Height: 1.375 in. max.

Pin No.:	1	2	3	4	5	6	7	8
Element:	2p	2g	h	2k	1k	h	1g	1p

Envelope: T-3

The following tests shall be performed:
For the purpose of inspection, use applicable reliable paragraphs of MIL-E-1 and Inspection Instructions for Electron Tubes.
For miscellaneous requirements, see Paragraph 3.3, Inspection Instructions for Electron Tubes.

Ref.	Test	Conditions	AQL(%)	Insp. Level or Code	Sym.	Limits Min.	LAL	Bogie	UAL	Max.	ALD	Units
	Qualification Approval Tests											
3.1	Qualification Approval:	Required for JAN Marking	---	---								
---	Cathode:	Coated Unipotential	---	---								
3.4.3	Base Connections:		---	---								
	Measurements Acceptance Tests Part 1, Note 3											
4.10.8	Heater Current:	Note 4	---	---	If:	---	288	300	312	---	24	mA
4.10.8	Heater Current:		0.65	II	If:	280	---	---	---	320	---	mA
4.10.15	Heater-Cathode Leakage:	Note 23 Ebk=/100Vdc Ebk=-100Vdc	0.65	II	Ibk: Ibk:	--- ---	--- ---	--- ---	--- ---	5.0 5.0	--- ---	uAdc uAdc
4.10.6.1	Grid Current:	Eb=150Vdc;Ebk=300; Rg=1.0Meg;Note 23	0.65	II	Ic:	0	---	---	---	-0.3	---	uAdc
4.10.4.1	Plate Current(1):	Notes 4, 23	---	---	Ib:	---	5.6	6.5	7.3	---	2.3	mAdc
4.10.4.1	Plate Current(1):		0.65	II	Ib:	4.5	---	---	---	8.5	---	mAdc
4.10.4.1	Plate Current(2):	Ec=-6.5Vdc;Ebk=0; Note 23	0.65	II	Ib:	---	---	---	---	100	---	uAdc
4.10.9	Transconductance(1):	Notes 4, 23	---	---	Sm:	---	5000	5400	5800	---	1100	umhos
4.10.9	Transconductance(1):		0.65	II	Sm:	4450	---	---	---	6350	---	umhos
4.7.5	Continuity and Shorts: (Inoperatives)		0.4	II		---	---	---	---	---	---	
4.9.1	Mechanical:	Envelope (8-1)	---	---		---	---	---	---	---	---	
	Measurements Acceptance Tests Part 2											
4.8.2	Insulation of Electrodes:	Note 23 (g-all) (p-all)	2.5	I	R: R:	100 100	--- ---	--- ---	--- ---	--- ---	--- ---	Meg Meg

CV3986

Ref.	Test	Conditions	AQL(%)	Insp. Level or Code	Sym.	Limits Min.	Limits LAL	Limits Bogie	Limits UAL	Limits Max.	ALD	Units
	Measurements Acceptance Tests Part 2 (Contd)											
4.10.4.1	Plate Current(1) Difference Between Sections:		2.5	I	Ib:	---	---	---	---	1.6	---	mAdc
4.10.9	Transconductance(2):	Ef=5.7V;Notes 22, 23	2.5	I	$\Delta \frac{Sg:}{Sf}$	---	---	---	---	15	---	%
4.10.6.2	Grid Emission:	Ef=7.5V;Ec=-7.5Vdc; Eb=150Vdc;Rk=0;Rg= 1.0Meg;Notes 23,24	2.5	I	Ic:	0	---	---	---	-0.5	---	uAdc
4.10.3.2	AF Noise:	Esig=65mVac;Rg=0.1Meg; Rp=.01Meg;Rk=75;Ck= 1000uf; Note 26	2.5	I	EB:	---	---	---	---	17	---	VU
---	Pulse Emission:	Ef=6.0V; e pulse=50v; tp=25usec; prr=200pps Notes 23, 25	6.5	1A	is:	300	---	---	---	---	---	ma
4.10.11.1	Amplification Factor:	Note 23	6.5	1A	Mu:	30	---	35	---	40	---	
4.10.14	Capacitance	No Shield;Note 23			Cgp:	1.2	---	---	---	1.8	---	uuf
		No Shield;Note 23			Cin:	1.8	---	---	---	3.0	---	uuf
		No Shield;Section 1	6.5	Code F	Cout:	0.20	---	---	---	0.36	---	uuf
		No Shield;Section 2			Cout:	0.22	---	---	---	0.42	---	uuf
		No Shield			Cgg:	---	---	---	---	0.013	---	uuf
		No Shield			Cpp:	---	---	---	---	0.52	---	uuf
---	Low Pressure Voltage Breakdown:	Pressure=55±5mm Hg; Voltage=300Vac; Note 6	6.5	Note 5		---	---	---	---	---	---	
4.9.20.3	Vibration(1):	No voltages;Post Shock and Fatigue Test End Points apply	10.0	Note 5		---	---	---	---	---	---	
4.9.19.1	Vibration(2):	Rp=10000;Ck=1000uf; F=40cps;G=15;Notes 7, 23	2.5	I	Ep:	---	---	---	---	50	---	mVac
	Degradation Rate Acceptance Tests Note 8											
4.9.5.3	Subminiature Lead Fatigue:	Note 9	2.5	Code F		4	---	---	---	---	---	arcs
4.9.20.5	Shock:	Hammer angle=30°; Ehk=-100Vdc;Rg=0.1Meg; Note 10	20	---		---	---	---	---	---	---	
4.9.20.6	Fatigue:	G=2.5;Fixed frequency; F=25 min, 60 max.	6.5	Note 5		---	---	---	---	---	---	
---	Post Shock and Fatigue Test End Points:	Vibration(2)	---	---	Ep:	---	---	---	---	200	---	mVac
		Heater-Cathode Leakage										
		Ehk=-100Vdc	---	---	Ihk:	---	---	---	---	20	---	uAdc
		Ehk=-100Vdc	---	---	Ihk:	---	---	---	---	20	---	uAdc
		Change in Transconductance(1) of individual tubes	---	---	$\Delta Sg:_t$	---	---	---	---	20	---	%
---	Glass Strain:	Note 11	6.5	I		---	---	---	---	---	---	

Ref.	Test	Conditions	AQL(%)	Insp. Level or Code	Allowable Defectives per Characteristic 1st Sample	Allowable Defectives per Characteristic Combined Samples	Sym.	Limits Min.	Limits Max.	Units
	Acceptance Life Tests Note 8									
4.11.7	Heater Cycling Life Test:	Ef=7.0V; 1 min. on, 4 min. off; Ehk=140Vac; Ec=Eb=0;Note 12	2.5	Code H	---	---		---	---	
---	Stability Life Test; (1 hour):	Ehk=-200Vdc;Rg/g=1.0Meg; TA=Room;Notes 13, 26	1.0	Code I	---	---		---	---	
4.11.4	Stability Life Test End Points:	Change in Transconductance(1) of individual tubes	---	---	---	---	$\Delta Sg:_t$	---	15	%

Ref.	Test	Conditions	AQL(%)	Insp. Level or Code	Allowable Defectives per Characteristic		Sym.	LIMITS		Units
					1st Sample	Combined Samples		Min.	Max.	
	Acceptance Life Tests Note 8(Contd)									
—	Survival Rate Life Test:	Stability Life Test Conditions or equivalent;TA=Room;Notes 14, 15	—	II	—	—		—	—	
4.11.4	Survival Rate Life Test End Points:	Continuity and Shorts (Inoperatives)	0.65	—	—	—		—	—	
		Transconductance(1)	1.0	—	—	—	Sm:	4000	—	umhos
4.11.5	Intermittent Life Test:	Stability Life Test Conditions;T Envelope= ≯220°C min;Notes 16,17; 1000 Hour Requirements do not apply	—	—	—	—		—	—	
4.11.4	Intermittent Life Test End Points;(500 Hours): Note 16	Note 18								
		Inoperatives;Note 19	—	—	1	3		—	—	
		Grid Current	—	—	1	3	Ic:	0	-0.9	uAdc
		Heater Current	—	—	2	5	If:	276	328	mA
		Change in Transconductance(1) of individual tubes	—	—	1	3	$\Delta \frac{Sm}{t}$:	—	25	%
		Transconductance(2)	—	—	2	5	$\Delta \frac{Sm}{Ef^2}$:	—	15	%
		Heater-Cathode Leakage								
		Ehk=+100Vdc	—	—	2	5	Ihk:	—	10	uAdc
		Ehk=-100Vdc					Ihk:	—	10	uAdc
		Insulation of Electrodes								
		g-all	—	—	2	5	R:	50	—	Meg
		p-all					R:	50	—	Meg
		Transconductance(1) average change	—	—	—	—	Avg $\Delta \frac{Sm}{t}$:	—	15	%
		Total Defectives	—	—	4	8		—	—	
4.11.5	Information Life Test: (1000 Hours)	Intermittent Life Test Conditions;Notes 17,20, 21								
	Packaging Information									
4.9.18.1.1	Carton Drop:	(d) Package Group 1; Carton Size C								

Caution to Electron Equipment Design Engineers. Special attention should be given to the temperature at which the tubes are to be operated. Reliability will be seriously impaired if maximum envelope temperature is exceeded. The life expectancy may be reduced if conditions other than those specified for life test are imposed on the tube and will be reduced appreciably if absolute maximum ratings are exceeded. Both reliability and performance will be jeopardized if filament voltage ratings are exceeded. Life and reliability of performance are directly related to the degree that regulation of the heater voltage is maintained at its center rated value.

Note 1: The reference point for heater-cathode potential shall be the positive terminal of the cathode resistor, unless otherwise specified.

Note 2: If altitude rating is exceeded, reduction of instantaneous voltages (Ef, excluded) may be required.

Note 3: The AQL for the combined defectives for attributes in Measurements Acceptance Tests, Part 1, excluding Inoperatives and Mechanical shall be one (1) percent. A tube having one (1) or more defects shall be counted as one (1) defective. MIL-STD-105, Inspection Level II shall apply.

Note 4: Variables Sampling Procedure:

Test for Lot-Average Acceptance:

Select a 35 tube sample at random from the lot. Number these tubes consecutively.

Determine the numerical average value of the characteristic specified on the specification sheet of the 35 tube sample. If this value is on or above the LAL and on or below the UAL, accept for Lot Average.

CV3986

Note 4: (Contd)

Test for Lot Dispersion Acceptance:
Divide the 35 tube sample into seven (7) consecutive sub-groups of five (5) tubes each. Determine the range, R, of each sub-group for the measured characteristic specified on the Specification Sheet.

Compute the numerical average of the R values which is equal to $\bar{R}$. If $\bar{R}$ is equal to or less than the ALD, accept for Lot Dispersion.

Note 5: This test shall be conducted on the initial lot and thereafter on a lot approximately every 30 days. Once a lot has passed, the 30-day rule shall apply. In the event of lot failure, the lot shall be rejected and the succeeding lot shall be subjected to this test. MIL-STD-105, sample size code letter F shall apply.

Note 6: There shall be no evidence of arcing or corona between anode pins and adjacent pins with no other voltages applied.

Note 7: For vibration tests, the impedance of the plate voltage supply shall not exceed that of a 40 uf capacitor at 10cps.

Note 8: Destructive tests:

Tubes subjected to the following destructive tests are not to be accepted under this specification.

4.9.5.3 Subminiature Lead Fatigue
4.9.20.5 Shock.
4.9.20.6 Fatigue.
4.11.7 Heater Cycling Life Test
4.11.5 Intermittent Life Test.

Note 9: When a manufacturer submits tubes for qualification approval, five extra tubes shall be submitted for lead fatigue testing. These may be electrical rejects.

Note 10: Leads may be clipped for application of voltages during impact.

Note 11: Glass strain procedures - All tubes submitted to this shall have been sealed a minimum of 48 hours prior to conducting this test. All tubes shall be at room temperature. The entire tube shall be immersed in water not less than 85°C for 15 seconds and immediately thereafter immersed in water not more than 5°C. for 5 seconds. The volume of water shall be large enough that the temperature will not be appreciably affected by the test. The method of submersion shall be in accordance with Drawing #245-JAN, and such that a minimum of heat is conducted away by the holder used. The tubes shall be placed in the water so that no contact is made with the containing vessel, nor shall the tubes contact each other. After the 5-second submersion period, the tubes shall be removed and allowed to dry at room temperature on a wooden surface. After drying at room temperature for a period of 48 hours, the tubes shall be inspected and rejected for evidence of air leaks. Electrical rejects other than inoperatives may be used in the performance of this test.

Note 12: The regulation of the heater voltage supply shall be not more than 3.0 percent. This test shall be made on a lot by lot basis. A failure or defect shall consist of an open heater, open cathode circuit, or a heater-cathode short.

Note 13: Stability Life Test:

a. Life test samples shall be selected from a lot at random in such a manner as to be representative of the lot. If such selection results in a sample containing tubes which are outside the initial specification sheet limits for the relevant life test end point characteristics, such tubes shall be replaced by randomly selected acceptable tubes.

b. Serially mark all tubes from the sample.

c. Record referenced characteristic measurements after a maximum operation of 15 minutes at specified voltage and current conditions on the entire sample.

d. Operate at life test conditions for one (1) hour (plus 30 minutes, minus 0 minutes). Life test shall be conducted as per paragraphs 4.11 and 4.11.5, MIL-E-1, except that the following shall be substituted for the third sentence of 4.11: The mean electrode potentials, except heater or filament, may be established at values differing by not more than 5% from the specified values provided the same average electrode dissipations are obtained that occur with the specified voltages. Fluctuations of all voltages including heater or filament voltage shall be as small as practical.

e. Record referenced characteristic measurements at the end of this test period. Referenced characteristic measurements shall be taken immediately following the test or tubes shall be preheated 15 minutes, under specified test voltage and current conditions, and immediately measured. The 15 minutes preheat shall be considered as part of the test time.

f. A defective shall be defined as a tube having a change in referenced characteristic greater than that specified on the specification sheet.

g. A resubmitted lot must be subjected to all Measurements Acceptance Tests except Mechanical Inspection, Vibration, and Low Pressure Voltage Breakdown tests.

Note 14: MEANS OF ASSURING SURVIVAL RATE- The procedure for assuring the maintenance of a desirable quality level in terms of early life survival consists of a series of normal, reduced, and tightened inspection plans for use at 100 hours. The sample size is dependent upon lot size, and the tranfer between normal, reduced, and tightened inspection is dependent upon quality history.

The selection of inspection scheme and sampling plan shall be in accordance with Inspection Instructions for Electron Tubes paragraph 5.3.4.2 through 5.3.4.3.1.3 inclusive except that paragraph 5.3.4.2.2 shall be modified by deleting the last part of the first sentence which states "..... or if no lot in the last 20 lots inspected shall have been declared non-conforming for life test qualities." At the manufacturer's option, reduced inspection may be used if no lot in the last ten (10) lots inspected shall have been declared non-conforming.

Note 14: (Contd)

INSPECTION PROCEDURE

a. Select sample in accordance with Note 13, paragraph (a).

b. Tubes to be tested at 100 hours as provided in MIL-E-1(4.7.5). When any tap-short indication is obtained, the test shall be repeated. When any short indication is again obtained the tube will be rejected as an inoperative.

c. Determine the number of defective tubes at the 100 hour period.

d. If more than the allowable number of defectives occur, declare the lot non-conforming.

e. A resubmitted lot must be subjected to all Measurements Acceptance Tests except Mechanical Inspection, Vibration, and Low Pressure Voltage Breakdown tests.

Note 15: For Survival Rate Life Test, the equivalent Stability Life Test conditions shall be interpreted as having the same heater voltage (Ef) and heater-cathode voltage (Ehk) as the Stability Life Test; and the same interruptions of MIL-E-1 paragraph 4.11.5 as the Intermittent Life Test. The electrode voltages shall be such that the element dissipations are not less than 80 percent, nor more than 100 percent of Stability Life Test Plate Dissipation. These voltages are to be maintained within the limits of plus 200, minus 50 percent of the Stability Life Test voltages.

Note 16: Intermittent Life Tests:

a. The first 20 tubes of the Stability Life Test sample which meet the measurements acceptance test limits for those characteristics specified as Intermittent Life Test End Points shall be used for the Intermittent Life Test sample. In the event that a second Stability Life Test sample is used, the first 20 tubes from that sample which meet the above conditions shall be used.

b. In the event of failure of the first sample on Intermittent Life Test, take a completely fresh sample (MIL-STD-105 sample size code letter I) and stabilize it in accordance with the conditions of the Stability Life Test. Then select from it the first 40 tubes which meet the measurements acceptance test limits for those characteristics specified as Intermittent Life Test End Points.
Subject these 40 tubes to the Intermittent Life Test. Acceptance shall then be based on combined results from the first and second samples.

c. As an alternate method, the manufacturer may select his life test sample as described in Note 13, paragraph (a).

d. Life test shall be conducted as per paragraphs 4.11, and 4.11.5, MIL-E-1, except that the following shall be substituted for the third sentence of 4.11: The mean electrode potentials, except heater or filament may be established at values differing by not more than 5% from the specified values provided the same average electrode dissipations are obtained that occur with the specified voltages. Fluctuations of all voltages including heater or filament voltage shall be as small as practical.

e. Regular Life Test

1. Regular life test shall be conducted for 1000 hours.

2. Regular life test acceptance shall be on the basis of the 500 and 1000 hours requirements as indicated on Specification Sheet.

3. Regular life test shall be in effect initially and shall continue in effect until the eligibility criteria for the Reduced Hours Life Test have been met.

f. Reduced Hours Life Test:

1. Reduced Hours Life Test shall be conducted for 500 hours and acceptance shall be based on the 500 hour end point limits.

2. Eligibility for Reduced Hours Life Tests: No lot failure due to the 1000 hour life test has occurred in the preceding three (3) consecutive lots.

3. Loss of eligibility for Reduced Hours Life Test: Two (2) or more 500 hour life test lot failures occurring in the last three (3) consecutive lots.

Note 16: (Contd)

h. Acceptance Criteria: The lot shall be considered satisfactory for acceptance provided that the specified allowable defects are not exceeded and the change of the average of any characteristic in the life test sample specified for life test control of averages is not exceeded. The average percentage change shall be ascertained from the determination of the individual changes for each tube in the life test sample from the zero (0) hour value for the referenced characteristic or characteristics. For purposes of computation of this average percentage change, the absolute values of the individual changes for each tube in the life test sample shall be used. Any tube found inoperative during life testing shall not be considered in the calculation of this average.

i. A resubmitted lot must be subjected to all Measurements Acceptance Tests except Mechanical Inspection, Vibration, and Low Pressure Voltage Breakdown.

j. Not more than one (1) accidental breakage shall be allowed in the life test sample. In the event that one (1) life test tube is accidentally broken, acceptability of the life test sample shall be based upon the remaining tubes in the sample provided that the broken tube was not known to be a defective.

Note 17: Envelope Temperature is defined as the highest temperature indicated when using a thermocouple of #40 BS or smaller diameter elements welded to a ring of .025 inch diameter phosphor bronze placed in contact with the envelope.

Note 18: Order for evaluation of life test defects.- If a tube is defective for more than one attribute characteristic, the characteristic appearing first in the life test end points shall constitute the failure.

Note 19: An inoperative as referenced in Life Test is defined as a tube having one (1) or more of the following defects: discontinuity (Ref. MIL-E-1, par. 4.7.1), shorts (Ref. MIL-E-1 par. 4.7.2) air leaks.

Note 20: On Information Life Tests, read same characteristics as Intermittent Life Test. Limits do not apply. Six copies of these data shall be forwarded to the Armed Services Electron Tube Committee upon request.

Note 21: This life test shall be conducted on a minimum of one sample of ten tubes each month of production. This sample shall be selected as the first ten serially marked, noninoperative tubes from a completed Intermittent Life Test sample. This life test shall be classified as a destructive test. Read at 1000 hours.

Note 22: Transconductance(2) is the percent change in Transconductance(1)' of an individual tube resulting from the change in Ef.

Note 23: Test each section separately.

Note 24: Prior to this test tubes shall be preheated 5 minutes with both sections operating separately at conditions indicated below. Test within three (3) seconds after preheating. Three-minute test is not permitted. Grid Emission shall be the last test performed on the sample selected for the Grid Emission test.

Ef	Ec	Eb	Rk	Rg
V	Vdc	Vdc	ohms	Meg
7.5	0	150	500	1.0

Note 25: The pulse is essentially a square wave with 1.0 usec rise time and 0.8 usec fall. The pulse shall be applied to plate and grid tied together. Pulse emission shall be measured in terms of voltage developed across a 1.0 ohm resistor in the cathode circuit. Test limit as measured by the leading edge of a calibrated trace, the amplitude of the trailing edge of which shall not vary by more than 20 percent from the value of the leading edge. Test each unit separately.

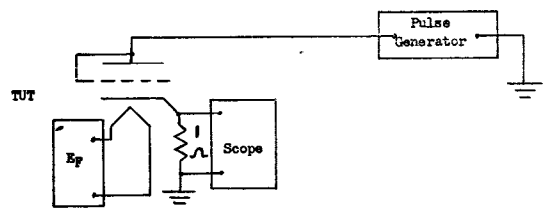

Note 26: Tie 1k to 2k; 1g to 2g; and 1p to 2p.

Note 27: Reference specification shall be of the issue in effect on the date of invitation for bid.

dd.23.10.57.

VALVE ELECTRONIC CV3998

GENERAL POST OFFICE: E-IN-C (S)

Specification: GPO/CV3998/Issue I Dated: Sept. 1957 To be read in conjunction with K 1001, BS448 and BS1409	SECURITY Specification: Unclassified	Valve: Unclassified

——→ indicates a change

TYPE OF VALVE: Wideband amplifier pentode
CATHODE: Indirectly heated
ENVELOPE: Glass unmetallised
PROTOTYPE: E180F, 5A/170K

MARKING
See K1001/4.

RATING			Note
Heater voltage	(V)	6.3	
Heater current	(A)	0.3	
Max. anode voltage (Ia=0)	(V)	400	A
Max. operating anode voltage	(V)	210	A
Max. anode dissipation	(W)	3	A
Max. screen voltage (Ig2=0)	(V)	400	A
Max. operating screen voltage	(V)	175	A
Max. screen dissipation	(W)	0.9	A
Max. control grid negative voltage	(V)	50	A
Max. control grid negative voltage peak	(V)	100	A
Max. cathode current	(mA)	25	A
Max. grid-cathode resistor (autobias conditions)	(MΩ)	0.5	A
Max. grid-cathode resistor (fixed bias conditions)	(MΩ)	0.25	A
Max. cathode-heater voltage	(V	60	A
Max. cathode-heater resistor	(KΩ)	20	A,D
Max. bulb temperature	(°C)	155	A
Mutual conductance	(mA/V)	16.5	B
CAPACITANCES			
C ag1 (max.)	(pF)	0.03	C
C in		7.9	C
C out		2.9	C

BASE
BS 448/B9A

CONNEXIONS

Pin	Electrode
1	k
2	g1
3	k
4	h
5	h
6	IC
7	a
8	g3,s
9	g2

DIMENSIONS
See BS 448/B9A/2.1
Size Ref. 1.

Dimension (m.m)	Min.	Max.
A Seated height	-	38.0
C Diameter	19.0	22.2
D Overall length	-	45.0

Notes: A. Absolute maximum values.
B. With Va=180V, Vg2=150V, Ia=13 mA
C. Measured with external shield.
D. In the interests of stable operation it is advisable to (restrict RKf to values of under 20K ohms.)

CV3998

TESTS

To be performed in addition to those applicable in K1001

	Test Conditions							Test	Limits Min.	Limits Max.	AQL	INSP. LEVEL	NOTE
a	Links to H.P.		Links to L.P.			Links to E							
	7		1,3,4,5,6,8,9			2		C out (pF)	2.5	3.3			
	2		1,3,4,5,6,8,9			7		C in (pF)	6.6 (AG2)	8.5	2.5	II (AC1)	1,
	2		7			1,3,4,5,6,8,9		C ag1 (pF)	-	0.03			
	Vh (V)	Va (V)	Vg2 (V)	Vg1 (V)	Vg3 (V)	Vhk (V)	Rk (ohms)						
b	6.3							Ih (mA)	285	315	0.65	II	
c	6.3					60		Heater - cathode leakage current. (µA)	-	15.0	2.5	II	
d	6.3	190	160	-4.7	0			Ia (mA)	-	0.8		100%	
e	6.3	190	160	+9	0		630	Ig2 (mA)	2.6	3.7		100%	
f	6.3	190	160	+9	0		630	Ia (mA)	12.2	13.8		100%	
g	6.3	190	160	+9	0		630	-Ig1 (µA)	-	0.5		100%	
h	6.3	190	160	+9	0		630	gm (mA/V)	14.2	18.8		100%	2,

NOTES. 1. Measured with an external shield.

2. Measuring signal on g1 not to exceed 100 mV r.m.s. with the cathode resistor suitably by-passed.

GENERAL AMENDMENT NO. 5

TO

SPECIFICATIONS CV4001 TO CV4084 (inclusive)

1. This Amendment applies to all valves from CV4001 to CV4084 inclusive which have B7G/F or B9A/F bases and are specified in relation to K1001.

2. At the discretion of the manufacturer the Inspection of the bases and dimensions of these valves may be made to the appropriate parts of B.S.448.

3. In due course the individual Specifications will be amended to call up the appropriate parts of B.S.448 instead of K1001.

T.V.C. Office

July, 1962

NB. General Amendments No. 1 to 4 covered Specifications CV4001 to CV4065 only.

(40639)

MINISTRY OF AVIATION DLRD/RRE

VALVE ELECTRONIC **CV4003**

Specification MOA/CV4003
Issue 4A Dated 4.9.63
To be read in conjunction with K1001, BS.448 and B.S.1409

SECURITY	
Specification	Valve
UNCLASSIFIED	UNCLASSIFIED

Indicates a change ←

TYPE OF VALVE - Reliable Low Impedance Double Triode
CATHODE - Indirectly-heated
ENVELOPE - Glass
PROTOTYPE - CV.491
RETMA Designation - 6189/12AU7WA
Nearest equivalent American Specification MIL-E-1/246

MARKING

See K1001/4
Note H

BASE

See B.S.448/B9A/1.1

RATING Note B

			Note
Heater Voltage	(V)	12.6	A,G
Heater Current	(A)	0.15	A
Max. Anode Voltage	(V)	330	C
Max. Anode Dissipation	(W)	3.0	C
Max. Peak Negative Grid Voltage	(V)	200	J
Max. Negative Grid Voltage	(V)	55	C
Max. Cathode Current	(mA)	20	C,F
Mutual Conductance	(mA/V)	2.2	C,D
Amplification Factor		17	C,D
Anode Impedance	(ohms)	7700	C,D
Max. Heater-Cathode Voltage	(V)	±200	C
Max. Bulb Temperature	(°C)	200	G
Max. Shock (short duration)	(g)	500	
Max. Acceleration (continuous operation)	(g)	2.5	

CONNECTIONS

Pin	Electrode
1	Anode 2 a"
2	Grid 2 g"
3	Cathode 2 k"
4	Heater h
5	Heater h
6	Anode 1 a'
7	Grid 1 g'
8	Cathode 1 k'
9	Heater CT hct.

DIMENSIONS

See B.S.448/B9A/2.1
Size ref. No.2

CAPACITANCES (pF)

		Note
Ca,g (nom.)	1.5	C,E
C in (nom.)	1.6	C,E
C out' (nom.)	0.5	E
→ C out" (nom.)	0.45	E

Dimension mm.	Min.	Max.
A seated height	-	49.0
C diameter	19.0	22.2
D overall length	-	56.0

MOUNTING POSITION

Any

NOTES

A. Centre-tapped heater; for operation on 6.3V connections should be made to pins 4 and 5 strapped together and pin 9.

B. All limiting values are absolute.

C. Each Section

D. Measured at Va = 250V; Vg = -8.5V (Ia = 10.5 mA)

E. Measured without a metal screen.

F. Difficulty may be encountered if this valve is operated for long periods of time with very small values of cathode current.

G. Caution to Electronic Equipment Design Engineers: Special attention should be given to the temperature of valves to be operated in aircraft. Reliability will be seriously impaired if the maximum bulb temperature is exceeded. The life expectancy may be reduced if conditions other than those specified for Life Test are imposed on the valve, and will be reduced appreciably if absolute maximum ratings are exceeded. Both reliability and performance will be jeopardised if heater voltage is exceeded: life and reliability performance are directly related to the degree that regulation of the heater voltage is maintained at its centre-rated value.

H. In addition to the requirements of K1001/4, the RETMA number shall be clearly and indelibly marked on the valve.

J. This rating applies providing the following conditions are not exceeded. Pulse 800 µsecs long not more frequently than once in every 20 milliseconds. Duty ratio not more than 5%.

TESTS

To be performed in addition to those applicable in K1001
Tests to be performed in the specified order unless otherwise agreed with the Inspection Authority

Test Conditions - unless otherwise stated.

Vh (V)	Va(V)	Vg (V)	Vhk (V)	
12.6	250	-8.5	0	Note 1

K1001	Test	Test Conditions	AQL %	Insp. Level	Sym-bol	LIMITS Min.	LAL	Bogey	UAL	Max.	ALD	Units
7.1	Glass Strain	No voltages	6.5	I								
	GROUP A	Note 7										
5.2	Insulation	Vg -all = -100V		100%		100						Mohms.
		Va -all = 300V		100%		100						Mohms.
	Reverse Grid Current	Rg = 500kohms. Max.		100%	Ig	-	-	-	-	0.5	-	µA
	GROUP B	Combined AQL	1.0									
	Heater Current		0.65	II	Ih	138	-	150	-	162	-	mA
	Heater Cathode	Note 3	0.65	II	Ihk	-	-	-	-	10	-	µA
	Leakage Current	Vhk = ± 100V		V2		-	-	-	2	-	-	µA
	Anode Current		0.65	II	Ia	6.5	-	-	-	14.5	-	mA
				V2		-	9.0	10.5	12.0	-	3.5	mA
	Mutual Conductance		0.65	II	gm	1.75	-	-	-	2.65	-	mA/V
				V2		-	2.0	2.2	2.4	-	.45	mA/V
	GROUP C	Combined AQL	6.5									
	Anode Current	Vg = -25V Note 2	2.5	I	Ia	-	-	-	-	20	-	µA
	Anode Current	Vg = -18V	2.5	I	Ia	5	-	-	-	-	-	µA
	Change in Mutual Conductance	Vh = 11.4V Note 4	2.5	I	Δgm	-	-	-	-	15	-	%
	Reverse Grid Current	Vh = 14V Rg = 500kohms Max. Note 5	2.5	I	Ig	-	-	-	-	1.5	-	µA

TESTS (Cont'd)

K1001	Test	Test Conditions	AQL %	Insp. Level	Sym-bol	LIMITS Min.	LAL	Bogey	UAL	Max.	ALD	Units
	Group C (Cont'd)											
	Noise and Microphony	Vh = 12.6V Va(b) = 300V Vg=0 RL = 50 kohms. Notes 3 & 6.	2.5	I	Va(AC)	-	-	-	-	50	-	mV r.m.s.
11.1	or alternatively Vibration Noise	Va(b) = 250V RL = 2kohms. Notes 3 & 9	2.5	I	Va(AC)	-	-	-	-	100 -		mV r.m.s.
	Anode Current difference between sections		2.5	I	Ia	-	-	-	-	3.5	-	mA
	GROUP D											
7.2	Base Strain	No voltages	6.5	IA								
	Capacitances	The capacitances shall be measured on a 1 Mc/s bridge with the valve mounted in a fully screened socket. No Shield.	6.5	IC	Cag	1.1	-	1.5	-	1.9	-	pF
					C in	1.2	-	1.6	-	2.0	-	pF
					C out'	0.3	-	0.50	-	0.7	-	pF
					C out"	0.3	-	0.45	-	0.6	-	pF
	Amplification Factor		6.5	IA	μ	15.5	-	-	-	18.5	-	
				V1		-	16.2	17.0	17.8	-	1.8	
	Mutual Conductance	Va = 100V; Vg = 0	6.5	IA	gm	2.25	-	-	-	3.75		mA/V
				V1		-	2.60	3.0	3.4	-	0.9	mA/V

TESTS (Cont'd)

K1001	Test	Test Conditions	AQL %	Insp. Level	Sym-bol	LIMITS Min.	LAL	Bogey	UAL	Max.	ALD	Units
	GROUP E											
11.2	Resonance Search	Va(b) = 250V RL = 2kohms Frequency range: 25 - 500 c/s	2.5	IC	Va AC	-	-	-	-	record		mV rms
					f	200	-	-	-			c/s
11.3	Fatigue	Frequency = 170c/s: Min. peak Acceleration = 5g Duration = 30, 39, 30 hrs. Vh = 14V; switched 1 min. on, 3 mins. off. Va = Vg = 0		IA								
	Post-Fatigue Tests	Combined AQL	6.5									
11.1	Vibration Noise	Va(b) = 250V RL = 2kohms. Notes 3 & 9	2.5		Va AC	-	-	-	-	150		mV rms
	Heater Cathode Leakage Current	Vhk = ± 100V Note 3	2.5		Ihk	-	-	-	-	30		µA
	Reverse Grid Current	Rg = 500kohms. Max.	2.5		Ig	-	-	-	-	1.5		µA
	Mutual Conductance		2.5		gm	1.6	-	-	-	-		mA/V
11.4	Shock	Hammer angle = 30° No voltages		IA								
	Post-Shock Tests	Combined AQL	6.5									
11.1	Vibration Noise	Va(b) = 250V RL = 2kohms Notes 3 & 9	2.5		Va AC	-	-	-	-	150		mV rms.

CV4003/4A/5

CV4003

TESTS (Cont'd)

K1001	Test	Test Conditions	AQL %	Insp. Level	Sym-bol	LIMITS Min.	LAL	Bogey	UAL	Max.	ALD	Units
11.1	GROUP E (Cont'd)											
	Heater Cathode Leakage Current	Vhk = ± 100V Note 3	2.5		Ihk	-	-	-	-	30		µA
	Reverse Grid Current	Rg = 500kohms.Max	2.5		Ig	-	-	-	-	1.5		µA
→	Mutual Conductance		2.5		gm	1.6	-	-	-	-		mA/V
	GROUP F											
AVI/ 5	Life	Vhk = 175V Heater positive Rg = 500k Nom										
AVI/ 5.1	Stability Life Test Change in Mutual Conductance		1.0	I	Δ gm	-	-	-	-	10		%
AVI/ 5.3	Intermittent Life Test	See above										
	Life Test End-point 500 hrs.	Combined AQL	6.5	IA								
	Inoperatives		2.5									
	Heater Cathode Leakage Current	Vhk = ± 100V	2.5		Ihk	-	-	-	-	20		µA
	Reverse Grid Current	Rg = 500 k Max	2.5		Ig	-	-	-	-	0.5		µA
	Mutual Conductance		2.5		gm	1.6	-	-	-	2.65		mA/V
	-do- Average change				Δ gm	-	-	-	-	15		%
	Anode Current		4.0		Ia	5.5	-	-	-	14.5		mA
→	Insulation	Vg- all = -100V	4.0		R	50	-	-	-	-		Mohms.
→		Va- all = -300V			R	50	-	-	-	-		Mohms.

TESTS (Cont'd)

K1001	Test	Test Conditions	AQL %	Insp. Level	Sym-bol	Limits Min.	LAL	Bogey	UAL	Max.	ALD	Units
	GROUP F (Cont'd)											
	Life Test End-point 1000 hrs.	Combined AQL	10	IA								
	Inoperatives		4.0									
	Heater Cathode Leakage Current	Vhk = ± 100V	4.0		Ihk	-	-	-	-	20		µA
	Reverse Grid Current	Rg = 500k Max	4.0		Ig		-	-	-	0.5		µA
	Mutual Conductance		4.0		gm	1.5	-	-	-	2.65		mA/V
	Anode Current		6.5		Ia	5.0	-	-	-	14.5		mA
→	Electrode Insulation	Vg -all = -100V			R	30	-	-	-	-		Mohms.
→		Va -all = -300V			R	30	-	-	-	-		Mohms.
AIX/ 2.5	GROUP G											
	Electrical re-test after 28 days holding period.			100%								
	Inoperatives		0.5									
	Reverse Grid Current	Rg = 500kohms.Max.	0.5		Ig	-	-	-	-	0.5		µA

NOTES

1. Test each unit separately with the elements of the opposite section connected to the cathode of the active section.

2. Test each unit separately with the test voltages applied to the opposite section.

3. Connect the two sections in parallel. Parasitic suppression of 50 ohms. maximum is permissible.

4. The value of mutual conductance shall apply to individual valves and is expressed:-

$$\frac{(\text{gm at } 12.6) - (\text{gm at } 11.4)}{(\text{gm at } 12.6)} \times 100\%$$

5. Prior to this test the valves shall be pre-heated for five (5) minutes under the conditions specified below. Test immediately after pre-heating.

Vh(V)	Vg(V)	Rk(ohms)	Va(V)	Rg(megohm)
14.0	-8.5	0	250	0.5

6. Connect the cathode together and connect to earth through a 1.5k resistor. Grids shall also be earthed; Ck = 1000 µF.

7. At least one of the tests in Group A shall be performed with the heater sections connected in parallel to a 6.3 volt supply.

8. Deleted

9. Alternatively, Va(b) = 250V, RL = 2k, Vg = 0, Rk = 410 ohms with the cathodes connected together, Ck = 1000 µF.

MINISTRY OF SUPPLY - DLRD/RRE

VALVE ELECTRONIC

CV 4004

Specification M.O.S./CV 4004

Issue 3 Dated 11.9.56.

To be read in conjunction with K1001 ,B.S.448 and B.S.1409

SECURITY	
Specification	Valve
UNCLASSIFIED	UNCLASSIFIED

Indicates a change →

TYPE OF VALVE - Reliable High Impedance Double Triode

CATHODE - Indirectly heated

ENVELOPE - Glass

PROTOTYPE - CV492 - 12AX7

MARKING: K1001/4

BASE: See B.S.448/B9A/1.1

RATING

All limiting values are absolute

MAXIMUM PEAK NEGATIVE GRID VOLTAGE (V) 200/H

			Note
Heater Voltage	(V)	12.6	A,F
Heater Current	(A)	0.15	
Max. Anode Voltage	(V)	330	C
Max. No-load Anode Voltage	(V)	550	C
Max. Anode Dissipation	(W)	1.1	C
Max. Heater-Cathode Voltage	(V)	200	C
Max. Cathode Current	(mA)	20	C,E
Mutual Conductance	(mA/V)	1.6	C,D
→ Amplification Factor		95	C,D
→ Anode Impedance	(ohms)	59,000	C,D
Max. Bulb Temperature	(°C)	200	F
Max. Shock (short duration)	(g)	500	
Max. Acceleration (continuous operation)	(g)	2.5	

CAPACITANCES (pF)

Ca,g (nom)	1.7	C G
C in (nom)	1.6	C G
C out' (nom)	0.46	G
C out" (nom)	0.34	G

CONNECTIONS

Pin	Electrode
1	Anode 2 a"
2	Grid 2 g"
3	Cathode 2 k"
4	Heater h
5	Heater h
6	Anode 1 a'
7	Grid 1 g'
8	Cathode 1 k'
9	Heater CT hot.

DIMENSIONS

B.S.448/B9A/2.1 Size ref. No.2

Dimensions (mm)	Min.	Max.
A. Seated height	-	49.0
C. Diameter	19.0	22.2
D. Overall length	-	56.0

MOUNTING POSITION: Any

NOTES

A. Centre-tapped heater: for operation on 6.3V, connections should be made to pins 4 & 5 strapped together and to pin 9.

C. Each section.

D. Measured at Va = 250V; Vg = -2V; Ia = 1.0 mA (approx.)

E. Difficulty may be encountered if this valve is operated for long periods of time with very small values of cathode current.

F. Caution to Electronic Equipment Design Engineers: Special attention should be given to the temperature of valves to be operated in aircraft. Reliability will be seriously impaired if the maximum bulb temperature is exceeded. The life expectancy may be reduced if conditions other than those specific for life test are imposed on the valve and will be reduced appreciably if absolute maximum ratings are exceeded. Both reliability and performance will be jeopardised if heater voltage ratings are exceeded. Life and reliability performance are directly related to the degree that regulation of the heater voltage is maintained at its centre-rated value.

G. Measured without metal screen.

I. This rating applies provided the following conditions are not exceeded. Pulse 800 μ sec long not more frequently than once in every 20 milliseconds. Duty ratio not more than 5%" AL3

To be performed in addition to those applicable in K1001

Tests to be performed in the specified order unless otherwise agreed with the Inspection Authority.

Test Conditions - unless otherwise specified

Vh (V)	Va (V)	Vg (V)	Vhk (V)	
12.6	250	-2	0	Note 1

K1001	Test	Test Conditions	AQL %	Insp. Level	Sym-bol	Limits Min	LAL	Bogey	UAL	Max	ALD	Units
7.1	Glass Strain	No voltages	6.5	I								
	GROUP A	Note 2										
	Insulation	Vg-all = -100V		100%	R	100	-	-	-	-		MΩ
		Va-all = -300V		100%	R	100	-	-	-	-		MΩ
	Reverse Grid Current	Rg = 500 k Max		100%	Ig	-	-	-	-	0.5		µA
	GROUP B	Combined AQL	1.0	II								
	Heater Current		0.65	II	Ih	138	-	150	-	162		mA
	Heater Cathode Leakage Current	Vhk = ± 100V	0.65	II	Ihk	-	-	-	-	10		µA
		Note 3		V2	Ihk	-	-	-	2	-		µA
	Anode Current		0.65	II	Ia	0.75	-	-	-	1.75		mA
				V2	Ia	-	1.00	1.25	1.50	-	0.55	mA
	Anode Tail Current	Vg = -4V	0.65	II	Ia	-	-	-	-	35		µA
	Mutual Conductance		0.65	II	gm	1.25	-	-	-	2.05		mA/V
				V2	gm	-	1.425	1.60	1.775	-	0.39	mA/V
	GROUP C	Combined AQL	6.5	I								
	AC Amplification	Va(b) = 100V Vg = 0 RL = 0.5MΩ Rg = 10MΩ Signal input = 0.2 V rms Frequency = 400 c/s nominal	2.5	I	Va(AC)	8.4	-	-	-			V rms
	Anode Current difference between sections		2.5	I	Ia	-	-	-	-	0.6		mA
	Mutual Conductance	Vh = 11.4V Note 4	2.5	I	Δgm	-	-	-	-	15		%
	Noise and Microphony	Va(b) = 300V RL = 100kΩ Vg = 0 Note 5	2.5	I	Va AC	-	-	-	-	100		mV rms
	or alternatively											
11.1	Vibration Noise	Va(b) = 250V RL = 2kΩ Note 5	2.5	I	Va AC	-	-	-	-	25		mV rms

TESTS (Cont'd)

CV 4004

K1001	Test	Test Conditions	AQL	Insp. Level	Symbol	Limits Min	LAL	Bogey	UAL	Max	ALD	Units
	GROUP D											
→	Amplification Factor		6.5	IA	μ	75	-	95	-	115		
→	Grid Emission	Vh = 14.0V Rg = 500 k Max Note 6	6.5	IA	Ig	-	-	-	-	1.5		μA
7.2	Base Strain	No voltages	6.5	IA								
	Capacitances	Measured on 1 Mc/s bridge with the valve mounted in a fully screened socket. No shield	6.5	IC	Cag	1.27	-	1.70	-	2.12		pF
					C in	1.20	-	1.60	-	2.0		pF
					C out'	0.22	-	0.46	-	0.7		pF
→					C out"	0.18	-	0.34	-	0.6		pF
→												
	GROUP E											
→ 11.2	Resonance Search	RL = 2kΩ Va(b) = 250V Frequency 25-500 c/s	2.5	IC	Va AC	-	-	-	-	Record		mV rms
					f	200	-	-	-	-		c/s
11.3	Fatigue	Vh = 14.0V switched 1 min. on and 3 mins. off. Va = 0.		IA								
→		Vg = 0 Frequency = 170 c/s. Min. peak										
→		Acceleration = 5g Duration = 30, 39, 30 hrs.										
→	Post Fatigue Tests	Combined AQL	6.5									
11.1	Vibration Noise	Note 8	2.5		Va AC	-	-	-	-	40		mV rms
→	Heater Cathode Leakage Current	Vhk = ± 100 V Note 3	2.5		Ihk	-	-	-	-	30		μA
→	Reverse Grid Current	Rg = 500 k Max	2.5		Ig	-	-	-	-	1.5		μA
11.4	Shock	Hammer angle = 30° No voltages		IA								
→												
→	Post Shock Tests	Combined AQL	6.5									
11.1	Vibration Noise	Note 8	2.5		Va AC	-	-	-	-	40		mV rms
→	Heater Cathode Leakage Current	Vhk = ± 100 V Note 3	2.5		Ihk	-	-	-	-	30		μA
→	Reverse Grid Current	Rg = 500 k Max	2.5		Ig	-	-	-	-	1.5		μA

K.1001 Ref.	Test	Test Cond [redacted]		INSP. LEVEL	Symbol	LIMITS MIN	LAL	BOGEY	UAL
	ELECTRODE	Vg -all = -100V		6.5	-	R	30	-	-	-
	INSULATION	Va -all = -300V				R	30	-	-	-

A VI/ 5.3	Intermittent Life Test	See above		IA								
	Life Test End-Point - 500 hrs	Combined AQL	6.5									
	Inoperatives		2.5									
	~~Heater Current~~		~~2.5~~		~~Ih~~	~~138~~	-	-	-	~~162~~	~~mA~~	
	Heater Cathode Leakage Current	Vhk = ± 100V Note 3	2.5		Ihk	-	-	-	-	20	µA	
	Reverse Grid Current	Rg = 500 k Max	2.5		Ig	-	-	-	-	0.5	µA	←
	Mutual Conductance		2.5		gm	1.15	-	-	-	2.05	mA/V	
	do. Average Change				Δgm	-	-	-	-	15	%	
	Anode Current		4.0		Ia	0.65	-	-	-	1.75	mA	←
	Insulation	Vg-all = -100V	4.0		R	50	-	-	-	-	MΩ	←
		Va-all = -300V			R	50	-	-	-	-	MΩ	←
	Life Test End-Point - 1000 hrs	Combined AQL	10.0									
	Inoperatives		4.0									
	Heater Current		4.0		Ih	138	-	-	-	162	mA	
	Heater Cathode Leakage Current	Vhk = ± 100V Note 3	4.0		Ihk	-	-	-	-	20	µA	
	Reverse Grid Current	Rg = 500 k Max	4.0		Ig	-	-	-	-	0.5	µA	←
	Mutual Conductance		4.0		gm	1.12	-	-	-	2.05	mA/V	
	Anode Current		6.5		Ia	0.6	-	-	-	1.75	mA	←
	GROUP G											
A IX/ 2.5	Re-test after 28 days holding period			100%								
A VI/ 5.6	Inoperatives		0.5									
	Reverse Grid Current	Rg = 500 k Max	0.5		Ig	-	-	-	-	0.5	µA	←

NOTES

1. Test each section separately with the elements of the opposite section earthed, except where otherwise stated.
2. At least one test in Group A shall be performed with the heaters of both sections connected in parallel and connected to a 6.3 volt supply.
3. Test with the sections connected together.
4. Pre-heat the valves for 5 minutes at Vh = 11.4V; Va = 250V; Vg = -2V; before testing. Pre-heat with both sections operating separately but test with the elements of the opposite section connected to earth.
5. Test with the sections connected in parallel; parasitic suppressors of 50 ohms maximum permissibile. Connect cathodes together and connect to earth through 1500 ohms, Ck = 1000µF. Connect the grids to earth.
6. Pre-heat the valves for 5 minutes at Vh = 14.0V; Va = 250V; Vg = -2V, before testing. Pre-heat with both sections operating but test with the elements of the opposite section connected to earth. The maximum time between pre-heating and test shall be 2 seconds.
7. Deleted.
8. The test conditions specified for the Vibration Noise test in Group C shall apply.
9. The test conditions specified for the AC Amplification test in Group B shall apply.

MINISTRY OF SUPPLY - DLRD/RRE

VALVE ELECTRONIC

CV4007

Specification MOS/CV 4007 Issue 3 Dated 21.9.56. To be read in conjunction with K1001 and BS.448 Nearest Equivalent American Specification - MIL-E-1/235	SECURITY Specification: UNCLASSIFIED Valve: UNCLASSIFIED

→ Indicates a change

TYPE OF VALVE - Reliable Double Diode

CATHODE - Indirectly-heated (Separate cathodes)

ENVELOPE - Glass

PROTOTYPE - CV283; VX7129

RETMA DESIGNATION - 5726/6AL5W/6097

MARKING

See K1001/4

Additional Marking

5726/6AL5W/6097

RATING

			Note
Heater Voltage	(V)	6.3	
Heater Current	(A)	0.3	
Max Peak Inverse Anode Voltage	(V)	360	
Max Peak Anode Current	(mA)	60	B
Max Mean Anode Current	(mA)	10	B
Max Surge Anode Current	(mA)	350	B
Max Heater-cathode Voltage	(V)	360	C
Max Bulb Temperature	(°C)	165	D
Max Shock (short duration)	(g)	500	
Max Acceleration (continuous operation)	(g)	2.5	

CAPACITANCES (pF)

Ca',a" (max)	0.026	E
Ca,(h+k+s) (nom)	3.2	B,E
Ck,(h+a+s) (nom)	3.9	B,E

BASE

B7G

See BS.448 : B7G/1.1

CONNECTIONS

Pin	Electrode	
1	Cathode	k'
2	Anode	a"
3	Heater	h
4	Heater	h
5	Cathode	k"
6	Internal Shield	s
7	Anode	a'

DIMENSIONS

See BS 448 : B 7G/2.1

Size Ref No 1.

Dimension(mm)	Min.	Max.
A. Seated height	-	38
C. Diameter	16	19
D. Overall length	-	45

MOUNTING POSITION

Any

NOTES

A. All limiting values are absolute.

B. Each diode

C. Breakdown value with cathode positive to heater.

D. Caution to Electronic Equipment Design Engineers: Special attention should be given to the temperature of valves to be operated in aircraft. Reliability will be seriously impaired if the maximum bulb temperature is exceeded. The life expectancy may be reduced if conditions other than those specified for life test are imposed on the valve and will be reduced appreciably if absolute maximum ratings are exceeded. Both reliability and performance will be jeopardised if heater voltage ratings are exceeded; life and reliability performance are directly related to the degree that regulation of the heater voltage is maintained at its centre-rated value.

E. Measured with a closely fitting metal can.

Z.12867.R.

CV4007

TESTS

To be performed in addition to those applicable in K1001

Test shall be performed in the specified order unless otherwise agreed with the Inspecting Authority.

Test Conditions - unless otherwise specified

Vh (V)	Va (Vrms)	RL (ohms)	C (uF)
6.3	165	11,000	8.0

K1001	Test	Test Conditions	AQL	Insp. Level	Symbol	Limits Min	LAL	Bogey	UAL	Max	ALD	Units
7.1	Glass Strain	No voltages	6.5	I								
	GROUP A											
5.2	Insulation			100%	R							
		Va, all = -300V				100				-		M
		Vs, all = -300V				100				-		M
	GROUP B	Combined AQL	1.0									
	Heater Current		0.65	II	Ih	0.275		0.30		0.325		A
	Heater-cathode Leakage Current	Vhk = ±100V; Note 1	0.65	II	Ihk	-		-		5.0		uA
	Output Current	Note 2	0.65	II	I out	16		18		-		mA
	Emission (1)	Va = 10.0V; Note 1	0.65	II	Ia	40		-		-		mA
	GROUP C	Combined AQL	6.5									
	Emission (2)	Vh = 5.7V; Va = 7.0 V rms Notes 1, 3	2.5	I	ΔIa	-				15		%
	Anode Current	Va = 0; RL = 40k; Note 1	2.5	I	Ia	2.0				20		uA
	Difference between sections	Va = 0; RL = 40k Note 1	2.5	I	Ia	-				5.0		uA
	Hum	Vh = 7.0V; Note 4	2.5	I	Va AC	-				10.0		mV rms
	GROUP D											
7.2	Base Strain		6.5	IA								
	Capacitance	Measured on a 1 Mc/s bridge with the valve mounted in a fully screened socket. With shield.	6.5	IC								
		Ca',a"				-	-	-	-	0.026	-	pF
		Ca',k'+h+s+ External Screen				2.4	-	-	-	4.0	-	pF
		Ca",k"+h+s+ External screen				2.4	-	-	-	4.0	-	pF
		Ck',a'+h+s+ External Screen				2.5	-	-	-	5.0	-	pF
		Ck",a"+h+s+ External Screen				2.5	-	-	-	5.0	-	pF
	GROUP E	Combined AQL	6.5									
11.3	Fatigue	Vh = 6.5V switched 1 min on and 3 mins off; Va = 0; f = 170 c/s; Min pk accel = 5g; Duration = 30, 39, 30 hrs.		IA								
	Post Fatigue Tests											
	Heater-cathode Leakage Current	Vhk = ±100V; Note 1	2.5	Ihk	-					15		uA
	Output Current	Note 2	2.5	Iout	14					-		mA
11.4	Shock	No voltages Hammer angle 30°		IA								
	Post Shock Tests											
	Heater-cathode Leakage Current	Vhk = ±100V; Note 1	2.5		Ihk	-				15		uA
	Output Current	Note 2	2.5		Iout	14				-		mA

TESTS (Cont'd)

CV4007

K1101	Test	Test Conditions	AQL	Insp. Level	Sym-bol	Limits Min	LAL	Bogey	UAL	Max	ALD	Units
	GROUP F											
AVI/5	Life	Note 2										
	Life Test End-point (500 hrs)	**Combined AQL**	6.5	IA								
AVI/ 5.6	Inoperatives		2.5									
	Heater Current		2.5		Ih	0.275				0.325		A
	Heater-catnode Leakage Current	Vhk = ±100V; Note 1	2.5		Ihk	-				10.0		uA
	Emission (1)	Va = 10.0V; Note 1	2.5		Ia	35				-		mA
	Anode Current	**Vs=0; Rl=4Ok; Note 1**	4.0		Ia	**1.0**				20		uA
	Insulation		4.0		R							
		Va, all = -300V				50				-		M
		Vs, all = -300V				50				-		M
	Emission (2)	Vh = 5.7V; Va = 7.0Vrms; Notes 1, 3	4.0		ΔIa	-				20		%
	Life Test End-point (1000 hrs.)	**Combined AQL**	10.0	IA								
AVI/ 5.6	Inoperatives		4.0									
	Heater Current		4.0		Ih	0.275				0.325		A
	Heater-cathode Leakage Current	Vhk = ±100V; Note 1	4.0		Ihk	-				10.0		uA
	Emission (1)	Va = 10.0V; Note 1	6.5		Ia	30				-		mA
	Insulation		6.5		R							
		Va, all = -300V				50				-		M
		Vs, all = -300V				50				-		M
	GROUP G											
AIX/ 2.5	Electrical re-test after 28-day holding period			100%								
AVI/ 5.6	Inoperatives		0.5									

NOTES

1. Test each section seperately.
2. **Measured in a dull wave circuit with the supply impedance (including transformer) initially adjusted so that a specially selected valve shall give an output of 18 mA. The selected valve shall be any valve in which the anode current is not less than 60 mA when 10 volts is applied. The anode voltage shall be measured between anode and earth by means of a rectifier type meter.**
3. The value of emission shall apply to individual valves and is expressed as

$$\frac{(\text{Ia at Vh} = 6.3\text{V}) - (\text{Ia at Vh} = 5.7\text{V})}{(\text{Ia at Vh} = 6.3\text{V})} \times 100\%$$

   Readings at Vh = 6.3V and Vh = 5.7V shall be made with Va = 7.0V rms.

4. The valve shall be tested in the circuit shown in Fig. 1. Pin numbers are indicated for the electrode connections.
5. Breakdown voltage is defined as the voltage at which arcing occurs between anode base pin the adjacent pins. Other test conditions required shall be

   Va = 500V rms, 50 c/s sinusoidal waveform;
   Ambient pressure = 55 ± 5 mm mercury;
   Ambient temperature = 25 ± 5°C;
   Relative humidity = zero %

Fig. 1

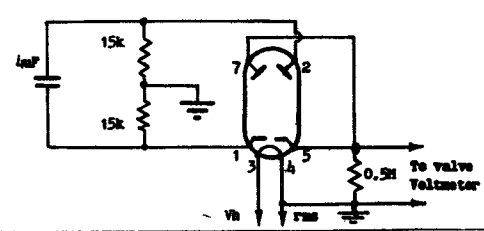

MINISTRY OF SUPPLY - D.L.R.D. (A)/R.A.E.

VALVE ELECTRONIC

CV4009

Specification MOS(A)/CV4009

Similar to American Specification 5749/6BA6W

Issue 2 Dated 6.4.56

To be read in conjunction with BS.448 BS.1409 and K1001

SECURITY	
Specification	Valve
UNCLASSIFIED	UNCLASSIFIED

TYPE OF VALVE - Reliable Miniature Variable μ H.F. Pentode

CATHODE - Indirectly heated

ENVELOPE - Glass

PROTOTYPE - CV.454

R.E.T.M.A. DESIGNATION - 5749/6BA6W

MARKING
K1001/4

Additional Markings:-
5749/6BA6W

BASE
BS.448/B7G

RATING			Note
Heater Voltage	(V)	6.3	C
Heater Current	(A)	0.3	
Max. Heater - Cathode Voltage	(V)	±150	A
Max. Operating Anode Voltage	(V)	330	A
Max. Anode Voltage (Ia = 0)	(V)	500	A
Max. Anode Dissipation	(W)	3.3	A
Max. Operating Screen Voltage	(V)	135	A
Max. Screen Voltage (Ig2 = 0)	(V)	330	A
Max. Screen Dissipation	(W)	0.7	A
Mutual Conductance	(mA/V)	4.4	B
Max. Grid 1 - Cathode Resistance for Cathode Bias	(MΩ)	0.5	
Max. Grid 1 - Cathode Resistance Fixed Bias	(MΩ)	0.1	
Max. Bulb Temperature	(°C)	165	C
Max. Shock (short duration)	(g)	500	
Max. Acceleration (continuous operation)	(g)	2.5	
Inner Amplification Factor (μ g1 g2)		24	
Mutual Conductance (g1 = - 20V)	(μA/V)	40	
Anode Impedance	(MΩ)	1.0	

CONNECTIONS

Pin	Electrode
1	g1
2	g3
3	h
4	h
5	a
6	g2
7	k

DIMENSIONS

See BS.448/B7G/2.1
Size Ref. No. 2

Dimension (mm)	Min.	Max.
A seated height	-	47.5
C diameter	16.0	19.0
D overall length	-	54.5

CAPACITANCES (pF)		
C in (nom.)	5.5	D
C out (nom.)	5.0	D
Ca, g1 (max.)	0.0035	D

MOUNTING POSITION

Any

NOTES

A. Absolute value.

B. Measured at Va = 250V, Vg2 = 100V, Vg3 = 0, Rk = 68Ω (Ia = 11mA, Ig2 = 4.2mA.)

C. Caution to Electronic Equipment Design Engineers: Special attention should be given to the temperature of valves to be operated in aircraft. Reliability will be seriously impaired if the maximum bulb temperature is exceeded. The life expectancy may be reduced if conditions other than those specified for life tests are imposed on the valve and will be reduced appreciably if absolute maximum ratings are exceeded. Both reliability and performance will be jeopardised if heater voltage ratings are exceeded: life and reliability performance are directly related to the degree that regulation of the heater voltage is maintained at its centre-rated value.

D. Measured without screen.

Z.11635.R.

To be performed in addition to those applicable in K1001

Tests shall be performed in the specified order unless otherwise agreed with the Inspecting Authority

Test Conditions - unless otherwise specified

Vh(V)	Va(V)	Vg1(V)	Vg2(V)	Vg3(V)	Rk(ohms)	Ck(μF)
6.3	250	0	100	0	68	1000

K1001 Ref.	Test	Test Conditions	AQL %	Insp. Level	Symbol	Limits						Units
						Min.	LAL	Bogey	UAL	Max.	ALD	
11.1	Vibration	No Voltages		100%								
7.1	Glass Strain	No Voltages	2.5	I								
	GROUP A											
	Electrode Insulation	Vh = 6.3V. Note 8 Vg1 to all = -100V		100%	R	100	-	-	-	-	-	MΩ
		Vg2 to all = -300V		100%	R	100	-	-	-	-	-	MΩ
		Va to all = -300V		100%	R	100	-	-	-	-	-	MΩ
	Reverse Grid Current	Vg1 = -1V. Note 6. Rg1 = 500kΩ max.		100%	Ig1	-	-	-	-	0.5	-	μA
	GROUP B											
		Combined AQL	1.0	II								
	Heater Current		0.65	II	Ih	275	-	-	-	325	-	mA
5.3	hk Leakage Current	Vhk = ±100V Note 1	0.65	II	Ihk	-	-	-	-	20	-	μA
		Vhk = -100V cathode positive		V2	Ihk	-	-	-	5	-	-	μA
	Anode Current		0.65	II	Ia	8.5	-	-	-	13.5	-	mA
				V2	Ia	-	9.4	11.0	12.6	-	2.5	mA
	Screen Current		0.65	II	Ig2	2.8	-	-	-	5.6	-	mA
				V2	Ig2	-	3.4	4.2	5.0	-	1.4	mA
	Mutual Conductance		0.65	II	gm	3.6	-	-	-	5.2	-	mA/V
				V2	gm	-	3.91	4.4	4.89	-	0.9	mA/V
	GROUP C											
		Combined AQL	6.5	I								
	Change of Mutual Conductance	Vh = 5.7V. Note 7	2.5	I	Δgm	-	-	-	-	15	-	%
	Mutual Conductance	Vg1 = -20V Rk = 0	2.5	I	gm	5	-	-	-	100	-	μA/V
	Reverse Grid Current	Vh = 6.9V Va = 300V, Vg2 = 125V Vg3 = 0. Note 4	2.5	I	Ig1	-	-	-	-	1.0	-	μ A
11.1	Vibration Noise	RL = 2kΩ. Note 2.	2.5	I	Va AC	-	-	-	-	25	-	mV rms

TESTS (Cont'd)

CV4009

K1001 Ref.	Test	Test Conditions	AQL %	Insp. Level	Symbol	Limits						Units
						Min.	LAL	Bogey	UAL	Max.	ALD	
	GROUP D											
7.2	Base Strain	No voltages	6.5	IA								
5.9	Capacitances	Measured on 1 Mc/s bridge with valve mounted in a fully Shielded socket. Valve not screened.	6.5	IC	C in	4.4	-	5.5	-	6.6	-	pF
					C out	3.5	-	5.0	-	6.5	-	pF
					Ca g1	-	-		-	0.0035	-	pF
	g3 Control	Vg1 = -4V Ia = 50 µA	6.5	IA	-Vg3	70	-	-	-	140	-	V
	Inner Amplification Factor	Max. Grid swing = 1V	6.5	IA	µg1g2	16	-	24	-	32	-	
	GROUP E											
11.2	Resonance Search	RL = 2k Ω Frequency:- 25 - 500 c/s	2.5	IC	Va AC	-	-	-	-	100	-	mV rms
11.3	Fatigue	Vh = 6.9V Note 3		IA								
	Post Fatigue Tests											
		Combined AQL	4.0									
5.3	hk Leakage Current	Vhk = ± 100V Note 1	2.5		Ihk	-	-	-	-	30	-	µA
	Reverse Grid Current	Vg1 = -1V Note 6 Rg1 = 500k Ω max.	2.5		Ig1	-	-	-	-	1.5	-	µA
	Mutual Conductance		2.5		gm	3.3	-	-	-	5.2	-	mA/V
11.1	Vibration Noise	As in Group C	2.5		Va AC	-	-	-	-	40	-	mV
11.4	Shock	Hammer Angle = 30° No voltages		IA								
	Post Shock Tests											
		Combined AQL	4.0									
5.3	hk Leakage Current	Vhk = ±100V Note 1	2.5		Ihk	-	-	-	-	30	-	µA
	Reverse Grid Current	Vg1 = -1V Note 6 Rg1 = 500k Ω max.	2.5		Ig1	-	-	-	-	1.5	-	µA
	Mutual Conductance		2.5		gm	3.3	-	-	-	5.2	-	mA/V
11.1	Vibration Noise	As in Group C	2.5		Va AC	-	-	-	-	4.0	-	mV rms
	GROUP F											
AVI/5	Life	Rg1 = 100kΩ ± 20% Vhk = 150V D.C. Heater positive. Note 5										

K1001 Ref.	Test	Test Conditions	AQL %	Insp. Level	Symbol	Limits Min.	LAL	Bogey	UAL	Max.	ALD	Units
AVI/5.1	Stability Life (1 hour)			I								
	Change in Mutual Conductance		1.0		Δgm	-	-	-	-	(6 4.2)	-	%
AVI/5.2	Survival Rate Life (100 hrs.)			II								
AVI/5.6	Inoperatives		0.65									
AVI/5.3	Intermittent Life			IA								
	Test Point 500 hrs.	Combined AQL	6.5									
AVI/5.6	Inoperatives		2.5									
	Heater Current		2.5		Ih	275	-	-	-	325	-	mA
5.3	hk Leakage Current	Vhk = ±100V Note 1	2.5		Ihk	-	-	-	-	40	-	μA
	Reverse Grid Current	Vg1 = -1V Note 6 Rg1 = 500kΩ	2.5		Ig1	-	-	-	-	1.5	-	μA
	Mutual Conductance		2.5		gm	3.0	-	-	-	5.2	-	mA/V
	Average Change of Mutual Conductance				Δgm	-	-	-	-	15	-	%
	Conductance	Vh = 5.7V	2.5		gm	2.5	-	-	-	5.2	-	mA/V
K	Electrode Insulation	Vh = 6.3v. Note 8. Vg1 - all = -100v. Vg2 - all = -300v. Va - all = -300v.	4.0		R R R	50 50 50	-	-	-	-	-	MΩ MΩ MΩ
	Electrode Insulation	Vh = 6.3v. Note 8. Vg1 - all = -100v. Vg2 - all = -300v. Va - all = -300v.	6.5		R R R	30 30 30	-	-	-	-		MΩ
	Mutual Conductance											
	GROUP G											
AIX/2.5	Electrical Retest after 28 days holding period			100%								
AVI/5.6	Inoperatives		0.5									
	Reverse Grid Current	Vg1 = -1V Note 6 Rg1 = 500kΩ max.	0.5		Ig1	-	-	-	-	1.0	-	μA

NOTES See Overleaf

CV4009

NOTES

1. Heater positive and negative successively.

2. The valve shall be mounted so that the direction of vibration is parallel to the minor axis of the electrode structure.
Vibration frequency = any fixed frequency in the range 25 - 100 c/s.
Min. peak acceleration = 2.5g.
The test shall be of sufficient duration to obtain a steady reading of noise output.

3. Valves shall be vibrated in each of the three required planes for not less than 30 hours (100 hours total). Heater switched 1 min. on 3 min. off. No other voltages. Min. peak acceleration = 5g; frequency 170 ± 5 c/s.

4. Adjust Vg1 to give Ia = 11.0 mA. For this test the valve shall be preheated for five minutes under the test conditions. Ig1 shall not be rising or out of limit after a total of 10 minutes.

5. For life tests Va and Vg2 may deviate from the specified value by ±50 volts providing the average dissipations are within 10% of the value obtained under the specified conditions. Fixed bias may be used.

6. This is an additional bias applied relative to the negative end of the cathode resistor.

7. Change of mutual conductance is expressed

$$\frac{(\text{gm at } 6.3V) - (\text{gm at } 5.7V)}{(\text{gm at } 6.3V)} \times 100\%$$

8. Heater and cathode strapped and considered as a single electrode.

MINISTRY OF SUPPLY - DLRD(A)/RRE

VALVE ELCTRONIC **CV4010**

Specification MOS(A)/CV4010 - MIL-E-1/236	SECURITY	
Issue 4 Dated 5.3.56.	Specification	Valve
To be read in conjunction with K1001	UNCLASSIFIED	UNCLASSIFIED

TYPE OF VALVE - Reliable RF Pentode, Sharp Cut-off

CATHODE - Indirectly-heated

ENVELOPE - Glass

PROTOTYPE - VX8100

RETMA DESIGNATION - 5654/6AK5W/6096

RATING

			Note
Heater Voltage	(V)	6.3	C
Heater Current	(A)	0.175	
Max. Anode Voltage	(V)	200	
Max. Cathode Current	(mA)	20	E
Max. Anode Dissipation	(W)	1.65	
Max. Screen Voltage	(V)	155	
Max. Screen Dissipation	(W)	0.55	
Max. H-C Voltage	(V)	±130	
Mutual Conductance	(mA/V)	5.0	A
Anode Impedance	(megohm)	0.34	A
Max. Operating Frequency	(Mc/s)	400	
Max. Bulb Temperature	(°C)	165	C
Max. Altitude	(ft)	10,000	C
Max. Shock (short duration)	(g)	500	
Max. Acceleration (continuous operation)	(g)	2.5	

CAPACITANCES (pF)

Cagl (max.)	0.02	B
Cac (nom.)	2.85	B
Cge (nom.)	4.0	B

MARKING

K1001/4

(See also Note D)

BASE

B7G

CONNECTIONS

Pin	Electrode
1	Grid 1
2	Cathode - Grid 3
3	Heater
4	Heater
5	Anode
6	Grid 2
7	Cathode - Grid 3

DIMENSIONS

See K1001/A1/D4

Dimensions (mm)	Min.	Max.
A	-	45.0
B	-	19.0

MOUNTING POSITION

Any

NOTES

A. Measured at Va = Vg2 = 120V, Vg1 = -2V.

B. Measured with a close-fitting metal can.

C. Caution to Electronic Equipment Design Engineers: Special attention should be given to the temperature of valves to be operated in aircraft. Reliability will be seriously impaired if the maximum bulb temperature is exceeded. The indicated altitude may be exceeded at reduced ratings. The life expectancy may be reduced if conditions other than those specified for life test are imposed on the valve and will be reduced appreciably if absolute maximum ratings are exceeded. Both reliability and performance will be jeopardised if heater voltage ratings are exceeded: life and reliability performance are directly related to the degree that regulation of the heater voltage is maintained at its centre-rated value.

D. In addition to the requirements of K1001/4, the RETMA designation shall also be clearly and indelibly marked on the valve.

E. Difficulty may be encountered if this valve is operated for long periods at very low values of cathode current.

TESTS

To be performed in addition to those applicable in K1001

Tests shall be performed in the specified order unless otherwise agreed with the Inspecting Authority.

Test Conditions - unless otherwise specified

Vh(V)	Va(V)	Vg2(V)	Vg1(V)
6.3	120	120	-2

K1001	Test	Test Conditions	AQL %	Insp. Level	Symbol	Limits Min	LAL	Bogey	UAL	Max	ALD	Units
11.1 7.1	Vibration Glass Strain	No voltages No voltages	 2.5	100% I								
	GROUP A											
	Insulation	Vg1 - all = -100V DC		100%	R	100						M
		Vg2 - all = -300V DC		100%	R	100						M
		Va - all = -300V DC		100%	R	100						M
	Reverse Grid Current	Rg1 = 100k		100%	Ig1	-	-	-	-	0.1	-	µA
	GROUP B	Combined AQL	1.0	II								
	Heater Current		0.65	II	Ih	160	-	175	-	190		mA
	H-C Leakage Current	Vhc = ± 100V	0.65	II	Ihc	-	-	-	-	10		µA
	Anode Current		0.65	II	Ia	5.0	-	-	-	11.0		mA
				V2	Ia		6.5	7.5	8.5		2.5	mA
	Screen Grid Current		0.65	II	Ig2	0.8	-	-	-	4.0		mA
				V2	Ig2	-	1.8	2.5	3.2	-	1.5	mA
	Mutual Conductance		0.65	II	gm	4.0	-	-	-	6.25		mA/V
				V2	gm	-	4.525	5.0	5.475		1.025	mA/V
	GROUP C	Combined AQL	6.5	I								
	Anode Current	Vg1 = -10V	2.5	I	Ia	-	-	-	-	200		µA
	Anode Current	Vg1 = -5.5V	2.5	I	Ia	5	-	-	-	-		µA
	Change in Mutual Conductance	Vh = 5.7V Note 1	2.5	I	Δgm	-	-	-	-	15		%
	Reverse Grid Current	Note 5 Vh = 7.0V; Rg1 = 100K	2.5	I	Ig1	-	-	-	-	0.5		µA
	Noise Factor	Note 2	2.5	I	NF	-	-	-	-	2.5		db
	Noise and Microphony	Vht = 200V; Vg1 = 0 Rc = 1000 ohms RL = 100k Rg2 = 500k Cg2 = 2 µF Cc = 1000 µF	2.5	I	Va AC	-	-	-	-	100		mV RMS
	or alternatively											
11.1	Vibration Noise	Vht = 135V RL = 2000 Rg1 = 100k Rg2 = 10k Cg2 = 2 µF	2.5	I	V AC	-	-	-	-	45		mV RMS
	GROUP D											
7.2	Base Strain		6.5	IA								
	Capacitances	Measured on 1 Mc/s Bridge and the valve mounted in a fully screened socket, with shielding can.	6.5	IA	(Cag	-	-	-	-	0.02		pF
					(Cge	3.4	-	-	-	4.6		pF
					(Cae	2.45	-	-	-	3.25		pF
	Low Pressure Voltage Breakdown	Notes 3 and 4	6.5	IB		500	-	-	-			V AC

TESTS (Contd.)

CV 4010

K1001	Test	Test Conditions	AQL %	Insp. Level	Symbol	Limits Min	LAL	Bogey	UAL	Max	ALD	Units
	GROUP E	Combined AQL	6.5									
11.2	Resonance Search	RL = 10k	2.5	IA	Va AC	-	-	-	-	150	-	mV RMS
		Frequency 25-500c/s			f	200	-	-	-	-		c/s
11.3	Fatigue Test	Vh = 6.3V switched 1 min on, 3 mins off Va = 0 Acceleration = 2.5g Duration = 3x 23 hrs Frequency = 170 c/s		IA								
	Post Fatigue Test											
	Vibration Noise	Note 6	2.5		Va AC	-	-	-	-	90		mV RMS
	H-C Leakage Current	Vhc = ± 100V	2.5		Ihc	-	-	-	-	30		µA
	Reverse Grid Current	Tgl = 100k	2.5		Igl	-	-	-	-	0.2		µA
	Mutual Conductance		2.5		gm	3.5	-	-	-			mA/V
11.5	Shock Test	Hammer angle = 30°		IA								
		No voltages										
	Post Shock Tests											
	Vibration Noise	Note 6	2.5		Va AC	-	-	-	-	90		mV RMS
	H-C Leakage Current	Vhc = ± 100V	2.5		Ihc	-	-	-	-	30		µA
	Reverse Grid Current	Rgl = 100k	2.5		Igl	-	-	-	-	0.2		µA
	Mutual Conductance		2.5		gm	3.5	-	-	-	-		mA/V
	GROUP F											
AVI/5	LIFE TEST	Va = 150V Vg2 = 125V Vgl = 0 Vhc = 135V heater positive Rgl = 100k Rc = 130 ohms										
AVI/5.1	Stability Life Test											
	Change in Mutual Conductance		1.0	I	Δgm	-	-	-	-	10		%
AVI/5.2	Survival Rate Life Test (100 hrs)											
AVI/5.6	Inoperatives		0.65	II		-	-	-	-	-		
AVI/5.3	Intermittent Life Test	See above										
	Life Test End-Point (500 hours)		6.5	IA								
	Inoperatives		2.5									
	Heater Current		2.5		Ih	0.16	-	-	-	0.19		A
	H-C Leakage Current	Vhc = ± 100V	2.5		Ihc	-	-	-	-	10		µA
	Reverse Grid Current	Rgl = 100k	2.5		Igl	-	-	-	-	0.1		µA
	Mutual Conductance		2.5		gm	3.75	-	-	-	6.25		mA/V
	do Average Change				Δgm	-	-	-	-	15		%
	Anode Current		4.0		Ia	4.5	-	-	-	11.0		mA
	Electrode Insulation	Vgl- all = -100V	4.0		R	50	-	-	-	-		M
		Vg2- all = -300V				50	-	-	-	-		M
		Va - all = -300V				50	-	-	-	-		M
	Noise Factor	Note 2	4.0		NF	-	-	-	-	2.7		db

TESTS (Cont'd)

K1001	Test	Test Conditions	AQL %	Insp. Level	Symbol.	Limits Min	LAL	Bogey	UAL	Max	ALD	Units
	Life Test End-Point (1000 Hours)		10	IA								
	Inoperatives		4.0			-	-	-	-	-		
	Heater Current		4.0		Ih	0.16	-	-	-	0.19		A
	H-C Leakage Current	Vhc = ± 100V	4.0		Ihc	-	-	-	-	10		µA
	Reverse Grid Current	Rgl = 100k	4.0		Igl	-	-	-	-	0.1		µA
	Mutual Conductance		4.0		gm	3.5	-	-	-	6.25		mA/V
	Anode Current		6.5		Ia	4.0	-	-	-	11.0		mA
	Noise Factor	Note 2	6.5		NF	-	-	-	-	2.8		db
	GROUP C											
AIX/ 2.5	Electrical Re-test after 28 days holding period			100%								
	Inoperatives		0.5									
	Reverse Grid Current	Rgl = 100k	0.5		Igl	-	-	-	-	0.15		µA

NOTES

1. The change in mutual conductance is expressed as:-

$$\frac{\text{gm at } 6.3V - \text{gm at } 5.7V}{\text{gm at } 6.3V} \times 100\%$$

2. The valve shall be tested at a convenient frequency within the range 40 to 50 Mc/s in an approved Head Amplifier - See circuit diagram on Page 5. The Noise Factor of the complete unit shall be measured for a bandwidth not exceeding one Mc/s. The noise contributed by the second stage shall not exceed 3% of the total noise. The input circuit losses measured at the grid shall not exceed an equivalent conductance of 30 micro-mhos at the test frequency. The measuring source shall be transformed to 2000 ohms at the grid. Initially the neutralisation shall be adjusted for an average valve, but the tuning of the input circuit shall be adjusted for each measurement.

3. Low Pressure Voltage Breakdown is defined as the voltage at which arcing occurs between anode and adjacent base pins. Pressure = 55 ± 5 mm Hg; temperature = 25 ± 5°C; Relative Humidity = 0; Voltage = 500V AC, 50 c/s sinusoidal waveform

4. This test shall be performed on the initial production lot and thereafter on a lot every 30 days approximately. In the event of a lot failure, the lot is rejected and the succeeding lot shall be subjected to this test. Once a lot has passed, the 30-day rule shall apply.

5. Prior to this test the valve shall be preheated for five (5) minutes under the conditions specified below. Test immediately after pre-heating.

Vh (V)	Vgl (V)	Rc (ohms)	Rgl (ohms)	Va (V)	Vgc (V)
7.0	0	130	100k	150	125

6. The conditions specified for the Vibration Noise Test in Group C shall apply.

MINISTRY OF SUPPLY - D.L.R.D. /R.A.E.

VALVE ELECTRONIC

CV4014

Specification MOS(A)/CV4014 Issue 4 Dated 5.11.56 To be read in conjunction with B.S.448, B.S.1409 and K.1001	SECURITY Specification: UNCLASSIFIED Valve: UNCLASSIFIED

⟶ Indicates a change

TYPE OF VALVE - Reliable H.F. Pentode

CATHODE - Indirectly heated

ENVELOPE - Glass

PROTOTYPE - CV138

R.E.T.M.A. DESIGNATION - 6064

MARKING

See K1001/4

Additional Marking:- 6064

BASE

B.S.448/B7G

RATING

(All limiting values are absolute)

			Note
Heater Voltage	(V)	6.3	B
Heater Current	(A)	0.3	
Max. Heater - Cathode Voltage	(V)	± 150	
Max. Anode Voltage (Wa = 3.0)	(V)	300	
Max. Anode Voltage (Ia = 0)	(V)	550	
Max. Anode Dissipation	(W)	3.0	
Max. Screen Voltage (Wg2 = 0.9)	(V)	300	
Max. Screen Voltage (Ig2 = 0)	(V)	450	
Max. Screen Dissipation	(W)	0.9	
Max. Grid ; - Cathode Resistance	(MΩ)	0.5	A
Max. Bulb Temperature	(°C)	200	B
Max. Shock (short duration)	(g)	500	
Max. Acceleration (continuous operation)	(g)	2.5	

Typical Operating Conditions

Measured at Va = Vg2 = 250V; Vg1 = -2V; Vg3 = 0

Anode Current	(mA)	10	
Screen Current	(mA)	2.5	
Mutual Conductance	(mA/V)	7.6	
Inner Amplification Factor (μg1,g2)		75	

CAPACITANCES (pF)

C in (nom.)		7.6	C
C out (nom.)		3.25	C
Ca,g1 (max.)		.01	C

CONNECTIONS

Pin	Electrode	
1	Grid	g1
2	Cathode	k
3	Heater	h
4	Heater	h
5	Anode	a
6	Supp. Sh.	g3 + s
7	Screen	g2

DIMENSIONS

See B.S.448/B7G/2.1

Size Ref. No.2

Dimension (mm)	Min.	Max.
A seated height.	-	47.5
C diameter	16.0	19.0
D overall length	-	54.5

MOUNTING POSITION

ANY

NOTES

A. For cathode bias. Max. value for fixed bias operation = 100 kΩ.

B. Caution to Electronic Equipment Design Engineers: The life expectancy may be reduced if conditions other than those specified for life tests are imposed on the valve, and will be reduced appreciably if absolute maximum ratings are exceeded. Both reliability and performance will be jeopardised if heater voltage ratings are exceeded: life and reliability performance are directly related to the degree that regulation of the heater voltage is maintained at its centre-rated value.

C. Measured with a close fitting metal screen.

To be performed in addition to those applicable in K1001

Tests shall be performed in the specified order unless otherwise agreed with the Inspecting Authority

Test Conditions - unless otherwise specified

Vh(V)	Va(V)	Vg1(V)	Vg2(V)	Vg3(V)	Rk(Ohms)	Ck(μF)
6.3	250	0	250	0	160	1000

K1001 Ref.	Test	Test Conditions	AQL %	Insp. Level	Symbol	Limits						Units
						Min.	LAL	Bogey	UAL	Max.	ALD	
7.1	Glass Strain	No Voltages	6.5	I								
	GROUP A											
	Electrode Insulation	Vh = 6.3V Note 6										
		Vg1-all = -100V		100%	R	100	-	-	-	-	-	MΩ
		Vg2-all = -300V		100%	R	100	-	-	-	-	-	MΩ
		Va-all = -300V		100%	R	100	-	-	-	-	-	MΩ
	Reverse Grid Current	Rg1 = 500k max.		100%	Ig1	-	-	-	-	0.5	-	μA
	GROUP B											
		Combined AQL	1.0	II								
	Heater Current		0.65	II	Ih	275	-	-	-	325	-	mA
→	Heater-Cathode Leakage Current	Vhk = ±100V Note 5	0.65	II	Ihk	-	-	-	-	10	-	μA
		Vhk = -100V Cathode Positive		V2	Ihk	-	-	-	2	-	-	μA
	Anode Current		0.65	II	Ia	7.5	-	-	-	12.2	-	mA
				V2	Ia	-	8.7	9.85	11.0	-	2.60	mA
	Screen Current		0.65	II	Ig2	1.8	-	-	-	3.4	-	mA
→				V2	Ig2	-	-	2.6	3.0	-	-	mA
	Mutual Conductance		0.65	II	gm	6.0	-	-	-	9.25	-	mA/V
				V2	gm	-	6.81	7.62	8.43	-	1.8	mA/V
	GROUP C											
		Combined AQL	6.5	I								
	Anode Current	Vg1 = -8V	2.5	I	Ia	-	-	-	-	100	-	μA
	Reverse Grid Current	Vg1 = -50V	2.5	I	Ig1	-	-	-	-	1.0	-	μA
	Change of Mutual Conductance	Vh = 5.7V Notes 1 and 4	2.5	I	gm	-	-	-	-	15	-	%
	Reverse Grid Current	Vh = 6.9V, Rk = 250Ω Va = Vg2 = 300V Note 2	2.5	I	Ig1	-	-	-	-	1.0	-	μA
11.1	Vibration Noise	RL = 2K Va(b)=250V Vg1 = -2V Rk = 0	2.5	I	Va AC	-	-	-	-	15	-	mVrms

TESTS (Cont'd)

CV4014

KOO1 Ref.	Test	Test Conditions	AQL %	Insp. Level	Symbol	Limits						Units
						Min.	LAL	Bogey	UAL	Max.	ALD	
	GROUP D											
7.2	Base Strain	No voltages	6.5	IA								
	Capacitances	Measured on 1 Mc/s bridge with valve mounted in a fully shielded socket. Valve screened	6.5	IC	C in C out Cg1	6.5 2.75 -	-	-	-	8.7 3.75 .01	-	pF pF pF
	g3 Negative Cut off voltage	Vg1 = 3.5V Ia = 50µA	6.5	IA	-Vg3	70	-	-	-	120	-	V
	Inner Amplification Factor	Max. grid swing 1V	6.5	IA	µ g1g2	60	-	75	-	89	-	
	GROUP E											
11.2	Resonance Search	RL = 2k Va(b)=250V Frequency:-	2.5	IC								
		(1) 25 - 200 c/s			Va AC	-	-	-	-	20	-	mV rms
		(2) 200 - 500 c/s			Va AC	-	-	-	-	100	-	mV rms
		(3) 500 - 2,500 c/s			Va AC	-	-	-	-	500	-	mV rms
11.3	Fatigue	Vh = 6.9V Note 3		IA								
		POST FATIGUE TESTS										
		Combined AQL	4.0									
	Heater-Cathode Leakage Current	Vhk = ±100V	2.5		Ihk	-	-	-	-	20		µA
	Reverse Grid Current	Rg1 = 500k Ω max.	2.5		Ig1	-		-	-	1.0	-	µA
	Mutual Conductance		2.5		gm	5.5	-	-	-	9.25	-	mA/V
11.1	Vibration Noise	As in Group C	2.5		Va AC	-	-	-	-	25	-	mV rms
11.4	Shock	Hammer Angle = 30° No voltages		IA								
		POST SHOCK TESTS										
		Combined AQL	4.0									
	Heater-Cathode Leakage Current	Vhk ± 100V	2.5		Ihk	-	-	-	-	20	-	µA
	Reverse Grid Current	Rg1 = 500k Ω max.	2.5		Ig1	-	-	-	-	1.0	-	µA
	Mutual Conductance		2.5		gm	5.5	-	-	-	9.25	-	mA/V
11.1	Vibration Noise	As in Group C	2.5		Va AC	-	-	-	-	25	-	mV rms

CV4014

K1001 Ref.	Test	Test Conditions	AQL %	Insp. Level	Symbol	Limits Min.	LAL	Bogey	UAL	Max.	ALD	Units
	GROUP F											
A VI/5	Life	Note 7										
A VI/5.1	Stability Life (1 hour)											
	Change in Mutual Conductance		1.0	I	Δgm	-	-	-	-	10	-	%
A VI/5.3	Intermittent Life											
	Test Point 500 hrs.	Combined AQL	6.5	IA								
A VI/5.6	Inoperatives		2.5									
	Heater Current		2.5		Ih	275	-	-	-	325	-	mA
	Heater-Cathode Leakage Current	Vhk = ± 100V	2.5		Ihk	-	-	-	-	20	-	μA
	Reverse Grid Current	Rg1 = 500k max.	2.5		Ig1	-	-	-	-	0.75	-	μA
	Mutual Conductance	(AA1)			gm	5.2	-	-	-	9.25	-	mA/V
	Average Change of Mutual Conductance				Δgm	-	-	-	-	15	-	%
	Anode Current		4.0		Ia	6.8	-	-	-	12.2	-	mA
	Electrode Insulation	Vh = 6.3V Note 6 Vg1-all = -100V Vg2-all = -300V Va-all = -300V	4.0		R R R	50 50 50	- - -	- - -	- - -	- - -	 - -	MΩ MΩ MΩ
	Test Point 1000 hrs.	Combined AQL	10.0	IA								
A VI/5.6	Inoperatives		4.0									
	ODE	Vh = 6.3V Note 6										
	NSULATION	Vg1 = all = -100V	6.5		R	30	-	-	-	-	-	MΩ
		Vg2 = all = -300V			R	30	-	-	-	-	-	MΩ
		Va = all = -300V			R	30	-	-	-	-	-	MΩ
	Anode Current		6.5		Ia	5.25	-	-	-	-	-	mA
	GROUP G											
A IX/2.4	Electrical Re-test after 28 days holding period			100%								
A VI/5.6	Inoperatives		0.5									
	Reverse Grid Current	Rg1 = 500kΩmax.	0.5		Ig1	-	-	-	-	0.75	-	μA

NOTES

1. The change of mutual conductance is expressed:

$$\frac{\text{gm at } 6.3V - \text{gm at } 5.7V}{\text{gm at } 6.3V} \times 100\%$$

2. Prior to this test the valve shall be preheated for five minutes under the test conditions. I_{g1} shall not be rising or out of limit after a total of 10 minutes.

3. Valves shall be vibrated in each of the three required planes for not less than 30 hours and not less than 100 hours total. Heater switched 1 minute on 3 minutes off. No other voltages applied. Min. peak acceleration = 5g: frequency = 170 ±5 c/s.

4. Preheat the valves for five minutes under the test conditions before making the test.

5. Heater positive and negative successively.

6. Heater strapped to cathode and considered as a single electrode.

7. R_{g1} = 100K Ω ±20%; Rk = 180Ω ± 10%; Vhk = 100V D.C. heater positive Or 150V A.C. 50 c/s r.m.s.

Ministry of Supply - DLRD(A)/RRE (South) VALVE ELECTRONIC **CV4018**

Specification MOS/CV.4018 incorporating MIL/E/1/83A Issue 2 dated 26-2-57. & BS.448 To be read in conjunction with K.1006	SECURITY	
	Specification	Valve
	UNCLASSIFIED	UNCLASSIFIED

→ indicates a change

TYPE OF VALVE - Gas-filled Tetrode (Reliable)
CATHODE - Indirectly Heated
ENVELOPE - Glass, unmetallised
PROTOTYPE - 5727/2D21W

MARKING
See K1001/4
additional marking
5727/2D21W

RATINGS

		Relay, Grid Controlled Rect.	Modulator	Notes
Heater Voltage	(V)	6.3 ± 10%	6.3 +10% −5%	
Heater Current	(A)	0.6	0.6	
Max Peak AC Anode Voltage	(V)		500	B
Max Peak Forward Anode Voltage	(V)	650	500	
Max Anode P.I.V.	(V)	1300	100	
Max G2 Voltage (Conduction)	(V)	-10	-10	
Max G1 Voltage (Conduction)	(V)	-10	-10	
Max Peak G2 Voltage (Non-conduction)	(V)	-100	-50	
Max Peak G1 Voltage (Non-conduction)	(V)	-100	-100	
Max Peak Heater-Cathode Voltage	(V)	-100 to +25	0	
Max G1 Circuit Resistance	(M)	10	0.5	
Min G2 Series Resistance	(k)		2	
Max G2 Series Resistance	(k)		25	
Max Peak Cathode Current	(A)	0.5	10	
Max Mean Cathode Current	(mA)	100	10	C
Max Peak G2 current	(mA)		20	
Max Peak G1 current	(mA)		20	
Max Mean G2 Current	(mA)	10		C
Max Mean G1 Current	(mA)	10		C
Max Pulse Duration	(us)		5	
Max Rate of Rise of Cathode Current	(A/us)		100	
Max p.r.f.	(pps)		500	
Max Duty Cycle	(Du)		0.001	
Max Ambient Temperature Range	(°C)	-75 to +90	-75 to +90	
Min Cathode Heating Time	(Sec)	10	10	

NOTES

A. All limiting values are absolute.

B. After the completion of a pulse, a 20 uSec delay is required before a positive voltage of more than 10V is applied.

C. Average over any interval of 30 seconds minimum.

Connections

Pin	Electrode
1	g1 control grid
2	k cathode
3	h heater
4	h heater
5	g2 auxiliary grid
6	a anode
7	g2 auxiliary grid

Dimensions
See BS.448 Section B7G/2.1.3

Dimension mm	Min.	Max.
A Seated height		54.0
C Diameter	16.0	19.0
D Overall length		61.0

CV4018

MIL-E-1/83A
25 July 1956
SUPERSEDING
MIL-E-1/83
5 Feb. 1953

INDIVIDUAL MILITARY SPECIFICATION SHEET

ELECTRON TUBE, MINIATURE XENON THYRATRON, TETRODE

JAN-5727/2D21W

This specification sheet forms a part of the latest issue of Military Specification MIL-E-1.

Ratings:			Conduction				Non-Conduction					
Absolute Maximum:	Ef V	epp v	epy v	epx v	Ec2 V	Ec1 V	ec2 v	ec1 v	ehk v	Rg1 Meg	Rg2 Ohms Min	Rg2 Ohms Max
Relay, G controlled Rect.:	6.3±10%	—	650	1300	-10	-10	-100	-100	-100 ± 25	10	1000	—
Pulse Modulator:	6.3±10% - 5%	500 Note 1	500	100	-10	-10	- 50	-100	0	0.5	2000	25K
Test. Cond.:	6.3	—	—	—	0	—	—	—	—	—	—	—

Ratings:												
Absolute Maximum:	ik a	Ik mA	ig2 ma	igl ma	Ig2 mA	Igl mA	tp us	dik/dt a/us	prr pps	Du	TA °C	tk sec(min)
		Note 2			Note 2	Note 2						
Relay, G. controlled Rect.:	0.5	100	—	—	10	10	—	—	—	—	-75 to +90	20
Pulse Modulator:	10	10	20	20	—	—	5	100	500	.001	-75 to +90	20
Test. Cond.:	—	—	—	—	—	—	—	—	—	—	—	20

Cathode: Coated Unipotential
Base: Miniature Button 7-pin, E7-1

Height: Max. 2-1/8 in.
Diameter: Max. 3/4 in.

Pin No.:	1	2	3	4	5	6	7
Element:	gl	k	h	h	g2	a	g2

Envelope: T-5 1/2 (6-2)

The following tests shall be performed:

For miscellaneous requirements, see Paragraph 3.3, Inspection Instructions for Electron Tubes.

Ref.	Test	Conditions	AQL (%)	Insp. Level or Code	Sym.	LIMITS Min.	LAL	Bogie	UAL	Max.	ALD	Units
	Qualification Approval Tests											
3.1	Qualification Approval:	Required for JAN Marking	—	—								
—	Cathode:	Coated Unipotential	—	—								
3.4.3	Base Connections:	E7-1	—	—								
4.9.20.3	Vibration (1):	No Voltages	—	—								
	Measurements Acceptance Tests, Part 1, Note 3											
4.10.8	Heater Current:	Note 4	—	—	If:	—	565	600	635	—	52	mA
4.10.8	Heater Current:		0.65	II	If:	540	—	—	—	660	—	mA
4.10.15	Heater-Cathode Leakage:	Ehk= +25 Vdc	0.65	II	Ihk:	—	—	—	—	15	—	uAdc
		Ehk= -100 Vdc	0.65	II	Ihk:	—	—	—	—	15	—	uAdc

CV4018

Ref.	Test	Conditions	AQL (%)	Insp. Level or Code	Sym.	LIMITS Min.	LAL	Bogie	UAL	Max.	AlD	Units
	Measurements Acceptance Tests, Part 1, Note 3, Continued											
4.10.17.1	Grid Voltage(1):	Epp=460 Vac; Rg1=0.1 Meg; Rp=3000; Notes 4, 6, and 7	—	—	Eccl:	—	-3.4	-3.7	-4.0	---	.70	Vdc
4.10.17.1	Grid Voltage(1):	Epp=460 Vac; Rg1=0.1 Meg; Rp=3000; Notes 6 and 7	0.65	II	Eccl:	-2.9	—	—	—	-4.5	—	Vdc
4.10.17.1	Grid Voltage(2):	Epp=460 Vac; Rg1=10 Meg; Rp=3000; Notes 6 and 7	0.65	II	Eccl:	—	—	-4.2	—	-5.2	—	Vdc
4.10.17.2	Anode Voltage(1):	Eccl=0; Rg1=0.1 Meg; Rp=1000; Notes 4, 6, and 9	—	—	Ebb:	—	—	29	33	—	8.0	Vdc
4.10.17.2	Anode Voltage(1):	Eccl=0; Rg1=0.1 Meg; Rp=1000; Notes 6 and 9	0.65	II	Ebb:	—	—	—	—	38	—	Vdc
4.10.17.2	Anode Voltage(2):	Ef=0; Eccl=-100 Vdc; Rg1=0; Rp=10,000; Notes 6 and 10	0.65	II	Ebb:	650	—	—	—	—	—	Vdc
—	Operation:	Ebb=500 Vdc approx.; egy=100 v; epy=1000 v; Eccl=-50 Vdc; Ecc2=0; prr=500 pps; Zo=25; RL=20; Note 31	0.65	II	ib:	16	—	—	—	—	—	a
4.10.24	Pulse Emission:	Ef=6.3 Vac; epp=egg1=egg2= 180 ∠ 9 v; tp=5 ∠ 0.25us; tr=0.5 us (max); tf=1.0 us (max); prr=100 ∠ 5 pps; Note 21	0.65	II	etd:	—	—	—	—	76	—	v
4.7.5	Continuity and Shorts: (Inoperatives)	Note 22	0.4	II		—	—	—	—	—	—	
4.9.1	Mechanical:	Envelope Outline No. (6-2)				—	—	—	—	—	—	
	Measurements Acceptance Tests, Part 2											
4.8	Insulation of Electrodes:	Ef=6.3 V; Note 23; Eg2-p= ∠ 380 Vdc	2.5	IA	Rg2-p:	760	—	—	—	—	—	Meg
4.10.17.2	Anode Voltage(3):	Ef=5.7 V; Eccl=0; Rg1=0.1 Meg; Rp=1000; Notes 6, 9 and 24	2.5	II	Ebb:	—	—	—	—	50	—	Vdc

Ref.	Test	Conditions	AQL (%)	Insp. Level or Code	Sym.	LIMITS Min.	LAL	Bogie	UAL	Max.	ALD	Units
	Measurements Acceptance Tests, Part 2 (Continued)											
4.10.17.1	Grid Voltage(3):	Ef=7.0 V; Epp=460 Vac; Rgl=10 Meg; Rp=3000; Notes 6, 7 and 25.	6.5	IA	Eccl:	—	—	—	—	-6.4	—	Vdc
—	Grid #2 Voltage:	Epp=150 Vac; Eggl=16 Vac; Rp=1000; Rgl=2500; Notes 26 and 27	6.5	IA	Egg2:	1.9	—	2.6	—	3.3	—	Vac
4.9.19.1	Vibration(2):	No Voltages	6.5	I		—	—	—	—	—	—	
	Degradation Rate Acceptance Tests, Note 8											
4.9.20.5	Shock:	Hammer Angle=48°	20	—		—	—	—	—	—	—	
4.9.20.6	Fatigue:	G=2.5; F=25 min, 60 max; Fixed Frequency	6.5	Note 5		—	—	—	—	—	—	
—	Post Shock and Fatigue Test End Points:	Heater-Cathode Leakage										
		Ehk=+25 Vdc	—	—	Ihk:	—	—	—	—	40	—	uAdc
		Ehk=-100 Vdc	—	—	Ihk:	—	—	—	—	40	—	uAdc
		Anode Voltage(1)	—	—	Ebb:	—	—	—	—	50	—	Vdc
		Pulse Emission	—	—	etd:	—	—	—	—	76	—	v
		Grid Voltage(1)	—	—	Eccl:	-2.9	—	—	—	-4.5	—	Vdc
—	Glass Strain:	Note 11	2.5	I		—	—	—	—	—	—	
4.9.6.1	Glass Strain:		—	—		—	—	—	—	—	—	

Ref.	Test	Conditions	AQL (%)	Insp. Level or Code	Allowable Defectives per Characteristic		Sym.	LIMITS		Units
					1st Sample	Combined Sample		Min.	Max.	
	Acceptance Life Tests, Note 8									
4.11.7	Heater Cycling Life Test:	Ef=7.5 V; Ehk= -100; Ec1=Ec2=Eb=0; Note 12	1.0	—	—	—		—	—	
4.11.4	Heater Cycling Life Test End Points:	Heater-Cathode Leakage								
		Ehk= ∕25 Vdc	—	—	—	—	Ihk:	—	20	uAdc
		Ehk= -100 Vdc	—	—	—	—	Ihk:	—	20	uAdc
—	Stability Life Test: (1 hour)	Epp=460 Vac; Rp/Ib=80mAdc (min); Rgl=50,000; Rp/ib=500 ma (min); TA Room; tk=20 sec +10 -1 sec; Notes 6, 13 and 28	1.0	I	—	—		—	—	
4.11.4	Stability Life Test End Points:	Grid Voltage(1)	—	—	—	—	Ec1:	-2.8	-4.6	Vdc
							△Ec1:	—	15%	
—	Survival Rate Life Test: (100 hours)	Stability Life Test Conditions or equivalent; Notes 6, 14, 15, 28 and 30	—	II	—	—		—	—	
4.11.4	Survival Rate Life Test End Points:	Continuity and Shorts	0.65	—	—	—	—	—	—	
		Grid Voltage(1)	1.0	—	—	—	Ec1:	-2.0	-4.8	Vdc
4.11.5	Intermittent Life Test:	Stability Life Test Conditions; T Envelope=150°C min; Notes 6, 16, 17 and 28	—	—	—	—		—	—	
4.11.4	Intermittent Life Test End Points: (500 hours)	Note 18								
		Inoperatives; Note 19	—	—	1	3		—	—	
		Heater Current	—	—	1	3	It:	540	670	mA
		Grid Voltage(1)	—	—	1	3	Ec1:	-2.0	-4.8	Vdc
		Anode Voltage(1)	—	—	1	3	Ebb:	—	50	Vdc
		Pulse Emission	—	—	2	5	etd:	—	100	v
		Heater-Cathode Leakage								
		Ehk= ∕ 25 Vdc	—	—	1	3	Ihk:	—	20	uAdc
		Ehk= -100 Vdc					Ihk:	—	20	uAdc
		Insulation of Electrodes g2-p	—	—	2	5	R:	380	—	Meg
		Total Defectives	—	—	4	8		—	—	
4.11.4	Intermittent Life Test End Points: (1000 hours)	Note 18								
		Inoperatives; Note 19	—	—	2	5		—	—	
		Heater Current	—	—	2	5	If:	540	680	mA
		Grid Voltage(1)	—	—	2	5	Ec1:	-1.6	-4.8	Vdc
		Heater-Cathode Leakage								
		Ehk= ∕ 25 Vdc	—	—	2	5	Ihk:	—	20	uAdc
		Ehk= -100 Vdc					Ihk:	—	20	uAdc
		Total Defectives	—	—	5	10		—	—	

Ref.	Test	Conditions	AQL (%)	Insp. Level or Code	Allowable Defectives per Characteristic		Sym.	LIMITS		Units
					1st Sample	Combined Sample		Min.	Max.	
	Acceptance Life Tests, Note 8 (Continued)									
4.11	Continuous Life Test: (200 hours)	Group A; epy=500 v (approx); egy=100 v (max); Eccl=-50 Vdc; Ecc2=0; Zo=12.5; RL=7.5; Notes 29 and 32								
4.11.4	Continuous Life Test End Points:	Pulse Emission Continuous Life Test conditions; Note 20					etd: ib:	— 16	100 —	v a
	Packaging Requirements									
4.9.18.1.6	Container Drop:	(d) Package, Group 1; Carton Size B								

Note 1: After completion of a pulse, a 20 us delay is required before a positive voltage of more than 10 v is applied to the tube.

Note 2: Averaged over any interval of 30 seconds maximum.

Note 3: The AQL for the combined defectives for attributes in Measurements Acceptance Tests, Part 1, excluding Inoperatives and Mechanical shall be one (1) percent. A tube having one (1) or more defects shall be counted as one (1) defective. MIL-STD-105, Inspection Level II shall apply.

Note 4: Variables Sampling Procedure:

Test for Lot Average Acceptance, Using Mean:
Select a 35 tube sample at random from the lot. Number these tubes consecutively.

Determine the numerical average value of the characteristic as specified on the specification sheet of the 35 tube sample. If this value is on or above the LAL and on or below the UAL, accept for Lot Average.

Test for Lot Dispersion Acceptance, Using Average Range:
Divide the 35 tube sample into seven (7) consecutive sub-groups of five (5) tubes each. Determine the range, R, of each sub-group for the measured characteristic specified on the Tube Specification Sheet.

Compute the $\overline{R}$ which is the average of the R values. If $\overline{R}$ is equal to or less than the ALD, accept for Lot Dispersion.

Alternate Method, Variables Sampling Procedure:

Test for Lot Average Acceptance, Using Median:
Select a 35 tube sample at random from the lot.

Test for all electrical characteristics for which variable acceptance limits are shown on the TSS.

Arrange the 35 measurements in the order of magnitude.

Find the value of the 18th measurement of the sample so arranged. This is the median $(\widetilde{X})$ of the sample of 35.

Note 4 : (Contd) If $(\tilde{X})$ is on or above the LAL and on or below the UAL, accept for lot average.

Test for Lot Dispersion Acceptance, Using Quasi-Range:
Arrange the 35 measurements in order of magnitude.

Find the difference between the 3rd and 33rd measurements of the samples so arranged. This is the quasi-range (QR3) of the sample of 35..

Multiply this quasi-range by 0.83.

If QR3 multiplied by 0.83 is equal to or less than the ALD, accept the characteristic for lot dispersion.

Note 5 : This test shall be conducted on the initial lot and thereafter on a lot approximately every 30 days. Once a lot has passed, the 30-day rule shall apply. In the event of lot failure, the lot shall be rejected and the succeeding lot shall be subjected to this test. MIL-STD-105, sample size code letter F shall apply.

Note 6 : Connect Pins 5 and 7 to Pin 2.

Note 7 : Use miniature steatite socket with grounded shield base. Shield the plate power supply. Use short shielded plate and grid leads. Plate and grid resistors shall be noninductive. Connect the grid resistor directly at the socket.

Note 8 : Destructive Tests:
Tubes subjected to the following destructive tests are not to be accepted under this specification.

4.9.20.5	Shock
4.9.20.6	Fatigue
4.11.7	Heater-Cycling Life Test
4.11.5	Intermittent Life Test
4.11	Continuous Life Test

Note 9 : Increase Ebb supply slowly and read Ebb at which conduction occurs.

Note 10: No voltages shall be applied to tube for 20 minutes minimum preceding this test.

Note 11: Glass Strain Procedures - All tubes submitted to this test shall have been sealed a minimum of 48 hours prior to conducting this test. All tubes shall be at room temperature. The entire tube shall be immersed in water not less than 97°C for 15 seconds and immediately thereafter immersed in water not more than 5°C, for 5 seconds. The volume of water shall be large enough so that the temperature will not be appreciably affected by the test. The method of submersion shall be in accordance with Drawing #245-JAN, and such that a minimum of heat is conducted away by the holder used. The tubes shall be placed in the water so that no contact is made with the containing vessel, nor shall the tubes contact each other. After the 5-second submersion period, the tubes shall be removed and allowed to dry at room temperature on a wooden surface. After drying at room temperature for a period of 48 hours, the tubes shall be inspected and rejected for evidence of air leaks. Electrical rejects, other than inoperatives, may be used in the performance of this test. The statement in "Inspection Instructions for Electron Tubes", paragraph 5.3.6.1, which defines an air leak as "*any tube which shows a grid current of 1.0 uAdc or twice the maximum limit, whichever is greater, shall be considered an inoperative" shall not apply.

Note 12: The no-load to steady state full load regulation of the heater voltage supply shall be not more than 3.0 percent. This test shall be made on a lot by lot basis. A failure or defect shall consist of an open heater, open cathode circuit, heater cathode short, or heater cathode leakage current in excess of the specified heater cycling life test end point limit.

Note 13: Stability Life Test:

a. Life test samples shall be selected from a lot at random in such a manner as to be representative of the lot. If such selection results in a sample containing tubes which are outside the initial specification sheet limits for the relevant life test end point characteristic, such tubes shall be replaced by randomly selected acceptable tubes.

b. Serially mark all tubes from the sample.

Note 13: (Contd)

c. Record referenced characteristic measurements after a maximum operation of 15 minutes under specified voltage and current conditions on the entire sample.

d. Operate at life test conditions for one (1) hour (plus 30 minutes, minus 0 minutes). Life test shall be conducted as per paragraphs 4.11 and 4.11.5, MIL-E-1, except that the following shall be substituted for the third sentence of 4.11: The mean electrode potentials, except heater or filament, may be established at values differing by not more than 5% from the specified values provided the same average anode current is obtained that occurs with the specified voltages. Fluctuations of all voltages including heater or filament voltage shall be as small as practical.

e. Record referenced characteristic measurements at the end of this test period. Referenced characteristic measurements shall be taken immediately following the test or tubes shall be preheated 15 minutes under specified test voltages and current conditions, and immediately measured. The 15 minutes preheat shall be considered as part of the test time.

f. A defective shall be defined as a tube having a change in referenced characteristic greater than that specified on the specification sheet.

g. A resubmitted lot must be subjected to all Measurements-Acceptance Tests except Mechanical Inspection and Vibration tests.

Note 14: Means of Assuring Survival Rate - The procedure for assuring the maintenance of a desirable quality level in terms of early life survival consists of a series of normal, reduced, and tightened inspection plans for use at 100 hours. The sample size is dependent upon lot size, and the transfer between normal, reduced, and tightened inspection is dependent upon quality history.

The selection of inspection scheme and sampling plan shall be in accordance with Inspection Instructions for Electron Tubes paragraph 5.3.4.2 through 5.3.4.3.1.3 inclusive except that paragraph 5.3.4.2.2 shall be modified by deleting the last part of the first sentence which states "...or if no lot in the last 20 lots inspected shall have been declared nonconforming for life test qualities". At the manufacturer's option, reduced inspection may be used if no lot in the last ten (10) lots inspected have been declared nonconforming.

Inspection Procedure:

a. Select sample in accordance with Note 13, paragraph (a).

b. Tubes to be tested at 100 hours as provided in MIL-E-1 (4.7.5). When any tap-short indication is obtained, the test shall be repeated. When any short indication is again obtained the tube will be rejected as an inoperative. The statement in "Inspection Instructions for Electron Tubes", paragraph 5.3.6.1, which reads "*any tube which shows a grid current reading of 1.0 uAdc or twice the maximum limit for grid current, whichever is greater, shall be considered an inoperative" shall not apply.

c. Determine the number of defective tubes at the 100 hour period.

d. If more than the allowable number of defectives occur, declare the lot nonconforming.

e. A resubmitted lot must be subjected to all Measurements Acceptance Tests except Mechanical Inspection and Vibration tests.

Note 15: For Survival Rate Life Test, the equivalent Stability Life Test conditions shall be interpreted as having the same heater voltage (Ef) as the Stability Life Test; and the same interruptions of MIL-E-1 paragraph 4.11.5 as the Intermittent Life Test. The electrode voltages shall be such that the average anode current is not less than 80 percent, or more than 100 percent of Stability Life Test average anode current.

Note 16: Intermittent Life Tests:

a. The first 20 tubes of the Stability Life Test sample which meet the measurements acceptance test limit for those characteristics specified as Intermittent Life Test End Points may be used for the Intermittent Life Test sample. In the event that a second Stability Life Test sample is used, the first 20 tubes from that sample which meet the above conditions shall be used.

Note 16: (Contd)

b. In the event of failure of the first sample on Intermittent Life Test, take a completely fresh sample (MIL-STD-105 sample size code letter I) and stabilize it in accordance with the conditions of the Stability Life Test. Then select from it the first 40 tubes which meet the measurements acceptance test limits for those characteristics specified as Intermittent Life Test End Points. Subject these 40 tubes to the Intermittent Life Test. Acceptance shall be based on combined results from the first and second samples.

c. As an alternate method, the manufacturer may select his life test sample as described in Note 13, paragraph (a).

d. Regular Life Test:

1. Regular Life Test shall be conducted for 1000 hours.

2. Regular Life Test acceptance shall be on the basis of the 500 and 1000 hour requirements as indicated on the Specification Sheet.

3. Regular Life Test shall be in effect initially and shall continue in effect until the eligibility criteria for the Reduced Hours Life Test have been met.

e. Reduced Hours Life Test:

1. Reduced Hours Life Test shall be conducted for 500 hours and acceptance shall be based on the 500 hour end point limits.

2. Eligibility for Reduced Hours Life Tests: No lot failure due to the 1000 hour life test has occurred in the preceding three (3) consecutive lots.

3. Loss of eligibility for Reduced Hours Life Tests: Two (2) or more 500 hour life test lot failures occurring in the last three (3) consecutive lots.

f. The life test sample shall be read at the following times:

0 hours
500 hours (plus 48 hours; minus 24 hours)
1000 hours (plus 48 hours; minus 24 hours; when in force)

Additional reading periods may be used at the discretion of the electron tube manufacturer.

g. Acceptance: The lot shall be considered satisfactory for acceptance provided that:

The specified allowable defects are not exceeded.

h. A resubmitted lot must be subjected to all Measurements Acceptance Tests except Mechanical Inspection and Vibration.

i. Not more than one (1) accidental breakage shall be allowed in the life test sample. If one (1) life test tube is accidentally broken, acceptability of the life test sample shall be based upon the remaining tubes in the sample provided that the broken tube was not known to be a defective.

Note 17: Envelope Temperature is defined as the highest temperature indicated when using a thermocouple of #40 BS or smaller diameter elements welded to a ring of .025 inch diameter phosphor bronze in contact with the envelope. The envelope temperature requirement will be satisfied if a tube having bogie plate current ($\leq$ 5%) under normal test conditions is determined to operate at the minimum specified temperature in any socket position on the life test rack.

Note 18: Order for Evaluation of Life Test Defects:
If a tube is defective for more than one attribute characteristic, the characteristic appearing first in the Life Test End Points shall constitute the failure.

Note 19: An inoperative as referenced in Life Test is defined as a tube having one (1) or more of the following defects: discontinuity (Ref. MIL-E-1, paragraph 4.7.1), shorts (Ref. MIL-E-1, paragraph 4.7.2).

Ref.	Test	Conditions	AQL (%)	Insp. Level or Code	Allowable Defectives per Characteristic		Sym.	LIMITS		Units
					1st Sample	Combined Sample		Min.	Max.	
	Acceptance Life Tests, Note 8 (Continued)									
4.11	Continuous Life Test: (200 hours)	Group A; epy=500 v (approx); egy=100 v (max); Ecc1=-50 Vdc; Ecc2=0; Zo=12.5; RL=7.5; Notes 29 and 32								
4.11.4	Continuous Life Test End Points:	Pulse Emission Continuous Life Test conditions; Note 20					etd: ib:	— 16	100 —	v a
	Packaging Requirements									
4.9.18.1.6	Container Drop:	(d) Package, Group 1; Carton Size B								

Note 1: After completion of a pulse, a 20 us delay is required before a positive voltage of more than 10 v is applied to the tube.

Note 2: Averaged over any interval of 30 seconds maximum.

Note 3: The AQL for the combined defectives for attributes in Measurements Acceptance Tests, Part 1, excluding Inoperatives and Mechanical shall be one (1) percent. A tube having one (1) or more defects shall be counted as one (1) defective. MIL-STD-105, Inspection Level II shall apply.

Note 4: Variables Sampling Procedure:

Test for Lot Average Acceptance, Using Mean:
Select a 35 tube sample at random from the lot. Number these tubes consecutively.

Determine the numerical average value of the characteristic as specified on the specification sheet of the 35 tube sample. If this value is on or above the LAL and on or below the UAL, accept for Lot Average.

Test for Lot Dispersion Acceptance, Using Average Range:
Divide the 35 tube sample into seven (7) consecutive sub-groups of five (5) tubes each. Determine the range, R, of each sub-group for the measured characteristic specified on the Tube Specification Sheet.

Compute the $\bar{R}$ which is the average of the R values. If $\bar{R}$ is equal to or less than the ALD, accept for Lot Dispersion.

Alternate Method, Variables Sampling Procedure:

Test for Lot Average Acceptance, Using Median:
Select a 35 tube sample at random from the lot.

Test for all electrical characteristics for which variable acceptance limits are shown on the TSS.

Arrange the 35 measurements in the order of magnitude.

Find the value of the 18th measurement of the sample so arranged. This is the median $(\tilde{X})$ of the sample of 35.

Note 4 : (Contd) If $(\tilde{X})$ is on or above the LAL and on or below the UAL, accept for lot average.

Test for Lot Dispersion Acceptance, Using Quasi-Range:
Arrange the 35 measurements in order of magnitude.

Find the difference between the 3rd and 33rd measurements of the samples so arranged. This is the quasi-range (QR3) of the sample of 35..

Multiply this quasi-range by 0.83.

If QR3 multiplied by 0.83 is equal to or less than the ALD, accept the characteristic for lot dispersion.

Note 5 : This test shall be conducted on the initial lot and thereafter on a lot approximately every 30 days. Once a lot has passed, the 30-day rule shall apply. In the event of lot failure, the lot shall be rejected and the succeeding lot shall be subjected to this test. MIL-STD-105, sample size code letter F shall apply.

Note 6 : Connect Pins 5 and 7 to Pin 2.

Note 7 : Use miniature steatite socket with grounded shield base. Shield the plate power supply. Use short shielded plate and grid leads. Plate and grid resistors shall be noninductive. Connect the grid resistor directly at the socket.

Note 8 : Destructive Tests:
Tubes subjected to the following destructive tests are not to be accepted under this specification.

4.9.20.5	Shock
4.9.20.6	Fatigue
4.11.7	Heater-Cycling Life Test
4.11.5	Intermittent Life Test
4.11	Continuous Life Test

Note 9 : Increase Ebb supply slowly and read Ebb at which conduction occurs.

Note 10: No voltages shall be applied to tube for 20 minutes minimum preceding this test.

Note 11: Glass Strain Procedures - All tubes submitted to this test shall have been sealed a minimum of 48 hours prior to conducting this test. All tubes shall be at room temperature. The entire tube shall be immersed in water not less than 97°C for 15 seconds and immediately thereafter immersed in water not more than 5°C, for 5 seconds. The volume of water shall be large enough so that the temperature will not be appreciably affected by the test. The method of submersion shall be in accordance with Drawing #245-JAN, and such that a minimum of heat is conducted away by the holder used. The tubes shall be placed in the water so that no contact is made with the containing vessel, nor shall the tubes contact each other. After the 5-second submersion period, the tubes shall be removed and allowed to dry at room temperature on a wooden surface. After drying at room temperature for a period of 48 hours, the tubes shall be inspected and rejected for evidence of air leaks. Electrical rejects, other than inoperatives, may be used in the performance of this test. The statement in "Inspection Instructions for Electron Tubes", paragraph 5.3.6.1, which defines an air leak as "*any tube which shows a grid current of 1.0 uAdc or twice the maximum limit, whichever is greater, shall be considered an inoperative" shall not apply.

Note 12: The no-load to steady state full load regulation of the heater voltage supply shall be not more than 3.0 percent. This test shall be made on a lot by lot basis. A failure or defect shall consist of an open heater, open cathode circuit, heater cathode short, or heater cathode leakage current in excess of the specified heater cycling life test end point limit.

Note 13: Stability Life Test:

a. Life test samples shall be selected from a lot at random in such a manner as to be representative of the lot. If such selection results in a sample containing tubes which are outside the initial specification sheet limits for the relevant life test end point characteristic, such tubes shall be replaced by randomly selected acceptable tubes.

b. Serially mark all tubes from the sample.

CV4018

Note 20: Thirty (30) seconds shall be the maximum time under test conditions before reading ib. There shall be no evidence of amplitude jitters.

Note 21: The tube shall be tested in the following circuit:

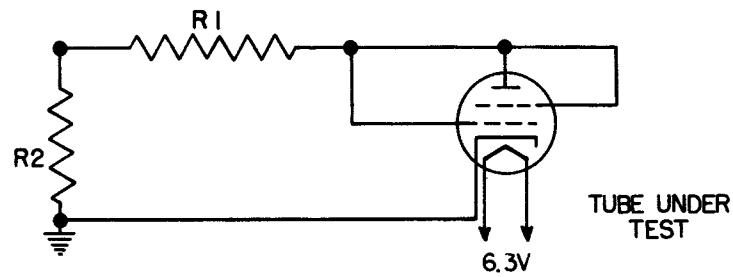

R1 = 10 ± 5% noninductive
R2 = 15 ± 5% noninductive

(a) A dummy calibrating tube containing a 5 ± 5% ohm noninductive resistance shall be used for calibration and maintenance. The calibrated pulse voltage amplitude shall be within specified values over 80% of the top portion of the pulse. No portion shall exceed 198 volts maximum amplitude.

(b) The tube shall be preheated at Ef=6.3V. The tube shall be transferred within 3 seconds to the test socket and preheated with Ef=6.3V only for a minimum of 5 seconds immediately before the application of pulse voltage.

(c) The maximum testing time is 3 seconds.

Note 22: Inoperatives shall be defined in accordance with the requirements of the Short and Continuity Test, MIL-E-1, paragraph 4.7.5., and "Inspection Instructions for Electron Tubes", dated 5 Oct. 1955, paragraph 5.3.6. The statement "*any tube which shows a grid current reading of 1.0 uAdc or twice the maximum limit for grid current, whichever is greater, shall be considered as an inoperative" shall not apply.

Note 23: Read electrode insulation between G2 and plate with all other elements floating.

Note 24: Preheat using Ef=5.7 V.

Note 25: Preheat for 15 minutes under the following conditions: Ef=7.0V, Epp=220 Vac; Eccl = Ecc2 =0; Rgl= 10 Meg; Ib=100 mAdc. Two (2) seconds shall be the maximum time between preheat and test.

Note 26: Eggl supply shall be in phase with Epp supply and Egg2 supply 180° out of phase with Epp supply.

Note 27: Vary Egg2 supply and read Egg2 at which conduction occurs.

Note 28: Phase of grid voltage adjusted to provide start of conduction at peak applied anode voltage.

Note 29: Average life is equal to 90% minimum calculated as 4.3.1 of the "Inspection Instructions for Electron Tubes".

Note 30: At the end of 100 hours, those tubes which meet the initial test requirements shall not be considered as having undergone a destructive test.

Note 31: Thirty seconds maximum in the operation test socket is permitted before reading. There shall be no evidence of amplitude jitter. The tube shall be tested in the circuit shown in Figure 1. The circuit constants shall be so chosen that: at epy = 1000 v. under resonant charging conditions, dik/dt = 100 a/us minimum, tp = 2.0 us $\pm$ 10%, prr = 500pps. The grid pulse characteristics at egy = 100v shall be : tp = 2.0us maximum, tr = 0.5 us minimum, driver impedance = 500 ohms minimum.

Note 32: Adjust epy for ib = 20 a initially, and maintain this epy value throughout the life test. The tube shall be tested in the circuit shown in Figure 1. The circuit constants shall be so chosen that: at epy = 500 v under resonant charging conditions, dik/dt = 100 a/us minimum, tp = 2.0 us $\pm$ 10%, prr = 1000 pps. The grid pulse characteristics at egy = 100 v shall be : tp = 2.0 us maximum, tr = 0.5 us minimum, driver impedance = 500 ohms minimum.

Note 33: Reference specification shall be of the issue in effect on the date of invitation for bid.

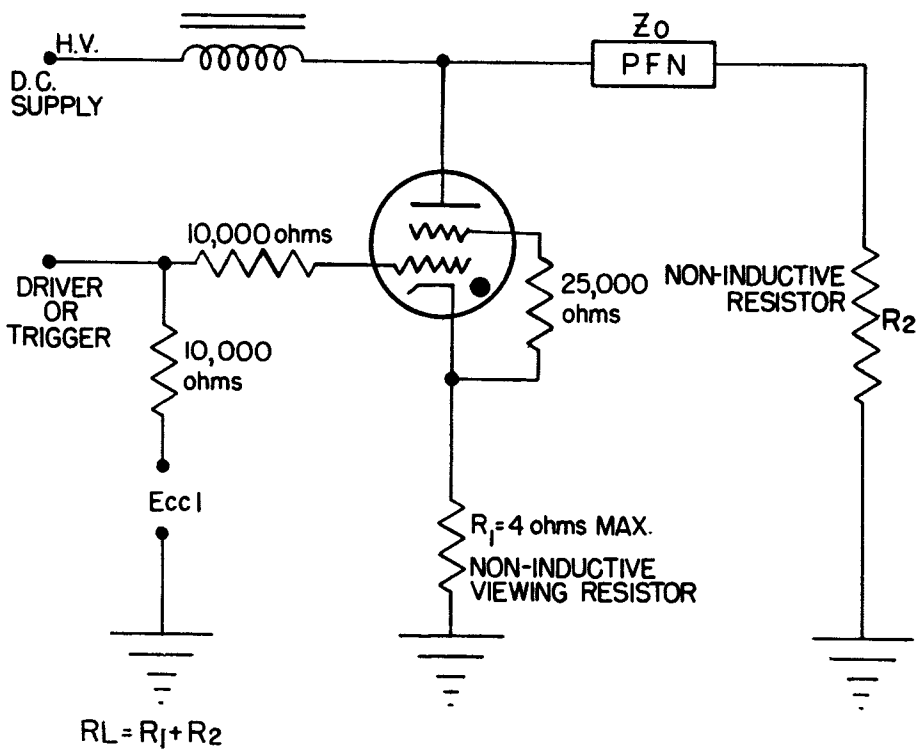

Fig. 1

MINISTRY OF SUPPLY - DLRD/RRE

VALVE ELECTRONIC **CV 4024**

Specification M08/CV4024.	SECURITY	
	Specification	Valve
Issue 3 Dated 21.9.56.		
To be read in conjunction with K1001, BS448 and BS1409	UNCLASSIFIED	UNCLASSIFIED

→ Indicates a change

TYPE OF VALVE - Reliable Double Triode
CATHODE - Indirectly-heated
ENVELOPE - Glass
PROTOTYPE - CV455 Nearest equivalent American Specification MIL-E-1/3.
RETMA DESIGNATION - 12AT7 WA

MARKING
K1001/4
(See also Note G)

BASE
See BS.448/B9A/1.1

RATING

All limiting Values are absolute			Note
Heater Voltage	(V)	12.6	A,D
Heater Current	(A)	0.15	A
Max. Anode Voltage	(V)	380	C
Max. No-load Anode Voltage	(V)	550	C
Max. Anode Dissipation	(W)	2.8	C
Max. Heater-Cathode Voltage	(V)	100	C
Max. Negative Grid Voltage	(V)	55	C
Mutual Conductance	(mA/V)	5.5	C,E
Amplification Factor		60	C,E
Anode Impedance	(ohms)	10,900	C,E
Max. Bulb Temperature	(°C)	200	D
Max. Shock (short duration)	(g)	500	
Max. Acceleration (continuous operation)	(g)	2.5	
MAX PEAK NEGATIVE GRID VOLTAGE	(V)	85	H

CAPACITANCES (pF)

Ca,g (nom.)	1.6	C,F
C in (nom.)	2.50	C,F
C out (nom.)	0.4	C,F
Ca',a" (max.)	0.33	F

CONNECTIONS

Pin	Electrode
1	Anode 2 a"
2	Grid g"
3	Cathode 2 k"
4	Heater h
5	Heater h
6	Anode 1 a'
7	Grid 1 g'
8	Cathode 1 k'
9	Heater CT het.

DIMENSIONS
See BS448 Section B9A/2.1.
Size ref.No.2

Dimensions (mm)	Min.	Max.
A Seated height	-	49
C Diameter	19	22.2
D Overall length	-	56

MOUNTING POSITION
Any

NOTES

A. Centre-tapped heater; for operation on 6.3V, connections should be made to pins 4 and 5 strapped together and pin 9.

C. Each section.

D. Caution to Electronic Equipment Design Engineers: Special attention should be given to the temperature of valves to be operated in aircraft. Reliability will be seriously impaired if the maximum bulb temperature is exceeded. The life expectancy may be reduced if conditions other than those specified for life test are imposed on the valve and will be reduced appreciably if absolute maximum ratings are exceeded. Both reliability and performance will be jeopardised if heater voltage ratings are exceeded: life and reliability performance are directly related to the degree that regulation of the heater voltage is maintained at its centre-rated value.

E. Measured at Va = 250V; Vg = 0; Rk = 200 ohms.

F. Measured without a metal screen.

G. In addition to the requirements of K1001/4, the RETMA designation shall be clearly and indelibly marked on the valve. H MAX DURATION 800 u Sec., 40% Max. Duty Cycle.

H. H.MAX.DURATION 800 u SEC 40% MAX. DUTY CYCLE

Z.12868.R.

To be performed in addition to those applicable in K1001

Tests shall be performed in the specified order unless otherwise agreed with the Inspection Authority

Test Conditions - unless otherwise specified

Vh (V)	Va (V)	Vg (V)	Rk (ohms)	Ck (μF)	
12.6	250	0	200	1000	Note 1

K1001	Test	Test Conditions	AQL %	Insp. Level	Symbol	Limits Min	LAL	Bogey	UAL	Max	ALD	Units
7.1	Glass Strain	No voltages	6.5	I								
	GROUP A	Note 2										
	Insulation	Vg-all = -100V DC		100%	R	100	-	-	-	-	-	MΩ
		Va-all = -300V DC		100%	R	100	-	-	-	-	-	MΩ
	Reverse Grid Current	Rg = 500k Max		100%	Ig	-	-	-	-	0.7	-	μA
	GROUP B	Combined AQL	1.0	II								
	Heater Current		0.65	II	Ih	138	-	150	-	162	-	mA
	Heater Cathode Leakage Current	Vhk = ± 100V DC	0.65	II	Ihk	-	-	-	-	10	-	μA
		Note 3		V2	Ihk	-	-	-	2	-		μA
	Anode Current		0.65	II	Ia	7	-	-	-	14	-	mA
				V2	Ia	-	8.6	10.0	11.4	-	3.55	mA
	Anode Tail Current	Vg = -20V DC	0.65	II	Ia cut-off	-	-	-	-	10	-	μA
	Mutual Conductance		0.65	II	gm	4.5	-	-	-	6.5	-	mA/V
				V2	gm	-	4.9	5.5	6.1	-	1.33	mA/V
	GROUP C	Combined AQL	6.5	I								
	Anode Current difference between sections		2.5	I	ΔIa	-	-	-	-	3.2	-	mA
A 43	Mutual Conductance	Vh = ~~11.6V~~ 4.0	2.5	I	gm	4.0	-	-	-	-	-	mA/V
		Note 4		VI	gm	-	4.4	-	-	-		mA/V
	Noise and Microphony	Va(b) = 300V RL = 10k Note 5	2.5	I	VaAC	-	-	-	-	100	-	mV rms
	or alternatively,											
11.1	Vibration Noise	Va(b) = 250V RL = 2k Frequency = 50 or 100 c/s Note 5	2.5	I	VaAC	-	-	-	-	25	-	mV rms

CV 4024

TESTS (Cont'd)

K1001	Test	Test Conditions	AQL %	Insp. Level	Symbol	Limits Min.	LAL	Bogey	UAL	Max	ALR	Units
	GROUP D											
	Amplification Factor		6.5	IA	μ	50	-	60	-	70	-	
	Negative Grid Emission	Vh = 15.0V Vg = -20V Rg = 500k Max Rk = 0 Note 6	6.5	IA	Ig	-	-	-	-	1.5	-	μA
7.2	Base Strain	No voltages	6.5	IA								
	Capacitances	Measured on 1 Mc/s bridge with the valve mounted in a fully screened socket. No shield.	6.5	IC	Cag	1.30	-	1.60	-	1.90	-	pF
					Cin	2.00	-	2.50	-	3.00	-	"
					C out¹	0.2	-	0.45	-	0.70	-	"
					C out²	0.16	-	0.38	-	0.60	-	"
					Ca¹a²	0.15	-	0.24	-	0.33	-	"
					Chk-kx	2.7	-	3.85	-	5.0	-	"
	GROUP E											
11.2	Resonance Search	RL = 2k; Va(b) = 250V Frequency = 25-500 c/s	2.5	IA	Va AC	-	-	-	-	record	-	mV rms
					f	200	-	-	-	-	-	c/s
11.3	Fatigue	Vh = 14V switched 1 min. on and 3 mins. off Va = 0, Vhk = 0 Min. peak Frequency = 170 c/s Acceleration = 5g Duration = 30, 39, 30 hrs.		IA								
	Post Fatigue Tests	Combind AQL	6.5									
11.1	Vibration Noise	Note 7	2.5		Va AC	-	-	-	-	100	-	mV rms
	Heater Cathode Leakage Current	Vhk = ± 100V Note 3	2.5		Ihk	-	-	-	-	30	-	μA
	Reverse Grid Current	Rg = 500k Max	2.5		Ig	-	-	-	-	1.5	-	μA
	Mutual Conductance		2.5		gm	3.8	-	-	-	-	-	mA/V
11.4	Shock	No voltages Hammer angle = 30°		IA								
	Post Shock Tests	Combined AQL	6.5									
11.1	Vibration Noise	Note 7	2.5		Va AC	-	-	-	-	100	-	mV rms
	Heater Cathode Leakage Current	Vhk = 100V Note 3	2.5		Ihk	-	-	-	-	30	-	μA
	Reverse Grid Current	Rg = 500k Max	2.5		Ig	-	-	-	-	1.5	-	μA
	Mutual Conductance		2.5		gm	3.8	-	-	-	-	-	mA/V
	GROUP F	SEE AMENDMENT AT FRONT										
A VI/5	Life	Vhk = 135V, heater positive Rg = 500k Max Ck = 0 μF										
	Stability Life Test											
A VI/5.1	Change in Mutual Conductance		1.0	I	Δgm	-	-	-	-	10	-	%

TESTS (Cont'd)

K1001	Test	Test Conditions	AQL %	Insp. Level	Symbol	Limits Min	LAL	Bogey	UAL	Max	ALD	Units
	GROUP F (Cont'd)											
A VI/ 5.3	Intermittent Life Test	See above		IA								
	Life Test End Point - 500 hrs.	Combined AQL	6.5									
	Inoperatives		2.5									
	Heater Current		2.5		Ih	138	-	-	-	162		mA
	Heater Cathode	Vhk = ± 100V	2.5		Ihk	-	-	-	-	10		µA
	Leakage Current	Note 3										
→	Reverse Grid Current	Rg = 500k Max	2.5		Ig	-	-	-	-	1.0		µA
	Mutual Conductance		2.5		gm	3.8	-	-	-	6.5		mA/V
	Average change in Mutual Conductance				Δgm	-	-	-	-	17		%
	Anode Current		4.0		Ia	6	-	-	-	14		mA
	Insulation	Vg-all = -100V	4.0		R	50	-	-	-	-		MΩ
		Va-all = -300V			R	50	-	-	-	-		MΩ
	Life Test End Point - 1000 hrs.	Combined AQL	10.0									
	Inoperatives		4.0									
	Heater Current		4.0		Ih	138	-	-	-	162		mA
	Heater Cathode	Vhk = ± 100V	4.0		Ihk	-	-	-	-	10		µA
	Leakage Current	Note 3										
→	Reverse Grid Current	Rg = 500k Max	4.0		Ig	-	-	-	-	1.5		µA
	Mutual Conductance		4.0		gm	3.55	-	-	-	6.5		mA/V
	Anode Current		6.5		Ia	5.35	-	-	-	14		mA
	GROUP G											
AIX /2.5	Electrical re-test after 28 days holding period			100%								
A VI /5.6	Inoperatives		0.5									
	Reverse Grid Current	Rg = 500k Max	0.5		Ig	-	-	-	-	0.7		µA

NOTES

1. Test each section separately with the elements of the opposite section earthed, except where otherwise stated.
2. At least one test in Group A shall be performed with the heaters of both sections connected in parallel and connected to a 6.3 volt supply.
3. Test with the sections connected together.
4. Pre-heat the valves for 5 minutes at Vh = 11.4V; Va = 250V; Rk = 200 ohms; Rg = 500k; Ck = 1000 µF before testing. Pre-heat with both sections operating separately, but test with the elements of the opposite section earthed.
5. Test with the two sections connected in parallel. Connect cathodes together and connect to earth through 100 ohms. Connect the grids to earth.
6. Pre-heat the valves for 5 minutes at Vh = 15.0V; Va = 250V; Rk = 200 ohms; Rg = 500k; Ck = 1000 µF before testing. Pre-heat with both sections operating. The maximum time between pre-heating and testing shall be 2 seconds. Test each section separately with the elements of the opposite section earthed.
7. The test conditions specified for the Vibration Noise test in Group C shall apply.

MINISTRY OF SUPPLY D.L.R.D/R.A.E.

VALVE ELECTRONIC **CV4029**

Specification M.O.S./CV.4029 incorporating MIL-E-1/175C.
Issue No.1 Dated 21.5.58
To be read in conjunction with BS.1409 and K.1006.

SECURITY	
Specification	Valve
UNCLASSIFIED	UNCLASSIFIED

TYPE OF VALVE: Sub miniature Power Amplifier pentode with flying leads.

CATHODE: Indirectly heated.

ENVELOPE: Glass.

PROTOTYPE: 5902

MARKING

See K.1001/4

Additional Marking 5902.

BASE

B8D
(Sub miniature 8 pin with flying leads.)

RATINGS
(All limiting values are absolute)

Heater Voltage	(V)	6.3
Heater Current	(mA)	450
Max. Operating Anode Voltage	(V)	165
Max. Operating Screen Voltage	(V)	155
Max. Anode Dissipation	(W)	3.7
Max. Screen Dissipation	(W)	0.4
Max. Cathode Current	(mA)	50
Max. Heater Cathode Voltage	(V)	200
Max. Bulb Temperature	(°C)	220

Typical Operating Conditions

Anode Volts	(V)	110
Screen Volts	(V)	110
Cathode Resistance	(Ω)	270
Anode Current	(mA)	30
Screen Current	(mA)	2
Mutual Conductance	(mA/V)	4.2

Capacitances (Note A)

Cag (max.)	(pF)	0.2
Cin (nom.)	(pF)	6.5
Cout (nom.)	(pF)	7.5

CONNECTIONS

Lead		
1	Control Grid	g
2	Cathode + Suppressor	k+g3
3	Heater	h
4	Cathode + Suppressor	k+g3
5	Anode	a
6	Heater	h
7	Screen Grid	g2
8	Cathode + Suppressor	k+g3

DIMENSIONS

See K.1006. T3
Outline 8-4.

DIMENSIONS	MIN.	MAX.
A	-	1.75"
B	1.39"	1.51"
C		0.4"

MOUNTING POSITION

Any.

NOTES

A. Measured with a close fitting metal screen.

CV 4029

MIL-E-1/175C
14 May 1956
SUPERSEDING
MIL-E-1/175B
26 October 1954

INDIVIDUAL MILITARY SPECIFICATION SHEET

ELECTRON TUBE, RECEIVING, PENTODE, SUBMINIATURE

JAN-5902

This specification sheet forms a part of the latest issue of Military Specification MIL-E-1.

Description: Pentode, Beam Power

Ratings:	Ef	Eb	Ecl	Ec2	Ehk	Rk	Rgl	Ik	Pp	Pg2	T Envelope	Alt
Absolute	V	Vdc	Vdc	Vdc	v	ohms	Meg	mAdc	W	W	oC	ft
Maximum:	6.6	165	0	155	200	---	0.55	50	3.7	0.4	+220	60,000 Note 2
Minimum:	6.0	---	-55	---	---	---	---	---	---	---	---	---
Test Cond.:	6.3	110	0	110	0 Note 1	270 Note 1	---	---	---	---	---	---

Cathode: Coated Unipotential
Beam: Subminiature 8-Pin with long leads

Diameter: 0.400 in. max.
Height: 1.75 in. max.

Envelope: T-3

Pin No.:	1	2	3	4	5	6	7	8
Element:	gl	k g3	h	k g3	p	h	g2	k g3

The following tests shall be performed:

For the purposes of inspection, use applicable reliable paragraphs of MIL-E-1 and Inspection Instructions for Electron Tubes.
For miscellaneous requirements, see Paragraph 3.3, Inspection Instructions for Electron Tubes.

Ref.	Test	Conditions	AQL(%)	Insp. Level or Code	Sym.	LIMITS Min.	LAL	Bogie	UAL	Max.	ALD	Units
	Qualification Approval Tests											
3.1	Qualification Approval:	Required for JAN Marking	---	---								
---	Cathode:	Coated Unipotential	---	---								
3.4.3	Base Connections:		---	---								
	Measurements Acceptance Tests, Part 1, Note 3											
4.10.8	Heater Current:	Note 4	---	---	If:	---	432	450	468	---	36	mA
4.10.8	Heater Current:		0.65	II	If:	420	---	---	---	480	---	mA
4.10.15	Heater-Cathode Leakage:	Ehk=+100Vdc Ehk=-100Vdc	0.65	II	Ihk: Ihk:	--- ---	--- ---	--- ---	--- ---	15 15	--- ---	uAdc uAdc
4.10.6.1	Grid Current:	Rgl=1.0Meg	0.65	II	Icl:	0	---	---	---	-1.0	---	uAdc
4.10.4.1	Plate Current(1):	Note 4	---	---	Ib:	---	27.0	30.0	33.0	---	8.0	mAdc
4.10.4.1	Plate Current(1):		0.65	II	Ib:	23.0	---	---	---	37.0	---	mAdc
4.10.4.1	Plate Current(2):	Ecl=-40Vdc; Ek=0	0.65	II	Ib:	---	---	---	---	100	---	uAdc
4.10.16.1	Power Output(1):	Esig=6.4Vac; Rp=3000	0.65	II	Po:	0.75	---	---	---	---	---	W
4.7.5	Continuity and Shorts: (Inoperatives)		0.4	II	---	---	---	---	---	---	---	---
4.9.1	Mechanical:	Envelope: (8-4)	---	---		---	---	---	---	---	---	
	Measurements Acceptance Tests Part 2											
4.8	Insulation of Electrodes:	gl-all p-all	2.5	I	R: R:	50 50	--- ---	--- ---	--- ---	--- ---	--- ---	Meg Meg
4.10.4.3	Screen Grid Current:		2.5	I	Ic2:	0	---	---	---	4.0	---	mAdc
4.10.9	Transconductance:	Note 4	---	---	Sm:	---	3850	4200	4550	---	950	umhos
4.10.9	Transconductance:		2.5	I	Sm:	3500	---	---	---	4900	---	umhos

CV4029

Ref.	Test	Conditions	AQL(%)	Insp. Level or Code	Sym.	LIMITS Min.	LAL	Bogie	UAL	Max.	ALT	Units
	Measurements Acceptance Tests Part 2(Contd)											
4.10.6.1	Grid Current(2):	Ef=7.5V; Ec1=-40Vdc; Rg1=1.0Meg; Ek=0; Note 20	2.5	I	Ic1:	0	---	---	---	-2.0	---	uAdc
4.10.16.1	Power Output(2):	Ef=5.7V; Esig=6.4Vac; Ep=3000; Note 23			Δ Po; Ef	---	---	---	---	15	---	%
4.10.3.2	AF Noise:	Esig=150Vac; Ec2=110Vdc; Ec1=-8.7Vdc; Ek=0; Ep=2000; Rg1=0.5Meg; Rg2=10,000; Cg2=4.0uf	2.5	I	NB:	---	---	---	---	17	---	VU
4.10.14	Capacitance:	0.405 in. dia. Shield 0.405 in. dia. Shield 0.405 in. dia. Shield	6.5	Code F	Cgp: Cin: Cout:	--- 5.5 6.5	--- --- ---	--- --- ---	--- --- ---	0.20 7.5 8.5	--- --- ---	uuf uuf uuf
4.10.10	Plate Resistance:		6.5	IA	rp:	0.01	---	---	---	---	---	Meg
---	Low Pressure Voltage Breakdown:	Pressure=55±5mm Hg.; Voltage=300Vac; Note 6	6.5	Note 5	---	---	---	---	---	---	---	---
4.9.20.3	Vibration(1):	No Voltages; Post Shock and Fatigue Test End Points apply	10.0	Note 5		---	---	---	---	---	---	
4.9.19.1	Vibration(2):	Ep=2000; Ck=1000uf; F=40cps; G=15; Note 7	2.5	I	Ep:	---	---	---	---	100	---	mVac
	Degradation Rate Acceptance Tests Note 8											
4.9.5.3	Subminiature Lead Fatigue:	Note 9	2.5	Code F	---	4	---	---	---	---	---	arcs
4.9.20.5	Shock:	Hammer angle=30°; Ehk=±100Vdc; Rg1=0.1Meg; Note 10	20	---		---	---	---	---	---	---	---
4.9.20.6	Fatigue:	G=2.5; Fixed Frequency; F=25 min., 60 max.	6.5	Note 5		---	---	---	---	---	---	
	Post Shock and Fatigue Test End Points:	Vibration(2)	---	---	Ep:	---	---	---	---	300	---	mVac
		Heater-Cathode Leakage										
		Ehk=+100Vdc	---	---	Ihk:	---	---	---	---	40	---	uAdc
		Ehk=-100Vdc	---	---	Ihk:	---	---	---	---	40	---	uAdc
		Change in Power Output(1) of individual tubes	---	---	Δ Po; t	---	---	---	---	20	---	%
---	Glass Strain:	Note 11	6.5	I	---	---	---	---	---	---	---	

Ref.	Test	Conditions	AQL(%)	Insp. Level or Code	Allowable Defectives per Characteristic 1st Sample	Allowable Defectives per Characteristic Combined Samples	Sym.	LIMITS Min.	LIMITS Max.	Units
	Acceptance Life Tests Note 8									
---	Stability Life Test: (1 hour)	Eb=Ec2=100Vdc; Ehk=±200Vdc; Rg1=0.47meg; Ek=220; TA=Room; Note 13	1.0	Code I	---	---		---	---	
---	Stability Life Test End Points:	Change in Power Output (1) of individual tubes	---	---	---	---	Δ Po; t	---	10.0	%
---	Survival Rate Life Test:	Stability Life Test Conditions or equivalent; TA=Room; Notes 14,15	---	II	---		---	---	---	
4.11.4	Survival Rate Life Test End Points:	Continuity and Shorts (Inoperatives)	0.65	---	---	---	---	---	---	
		Power Output(1)	1.0	---	---	---	Po:	0.65	---	W
4.11.7	Heater Cycling Life Test:	Ef=7.0V; 1 min. on; 4 min. off; Ehk=140Vac; Ec1=Ec2=Eb=0; Note 12	2.5	Code H	---	---		---	---	

Ref.	Test	Conditions	AQL(%)	Insp. Level Or Code	Allowable Defectives per Characteristic		Sym.	LIMITS		Units
					1st Sample	Combined Samples		Min.	Max.	
	Acceptance Life Tests Note 8(Contd)									
4.11.4	Heater Cycling Life Test End Points:	Heater-Cathode Leakage								
		Ehk=+100Vdc	—	—	—	—	Ihk:	—	40	uAdc
		Ehk=-100Vdc	—	—	—	—	Ihk:	—	40	uAdc
4.11.5	Intermittent Life Test:	Stability Life Test Conditions; T Envelope=+220°C min; Notes 16,17; 1000 Hour Requirements do not apply	—	—	—	—		—	—	
4.11.4	Intermittent Life Test End Points:(500 Hours): Note 16	Note 18								
		Inoperatives; Note 19	—	—	1	3		—	—	
		Heater Current	—	—	2	5	If:	414	492	mA
		Heater-Cathode Leakage								
		Ehk=+100Vdc	—	—	2	5	Ihk:	—	60	uAdc
		Ehk=-100Vdc	—	—			Ihk:	—	60	uAdc
		Grid Current	—	—	1	3	Icl:	0	-2.0	uAdc
		Change in Power Output(1) of individual tubes from initial	—	—	1	3	ΔP_{o_t}:	—	20	%
		Power Output(1) average change	—	—	—	—	Avg ΔP_{o_t}:	—	15	%
		Insulation of Electrodes								
		g1-all	—	—	2	5	Ir:	25	—	Meg
		p-all	—	—			Ir:	25	—	Meg
		Power Output(2)	—	—	2	5	$\Delta P_{o_{Ef}}$:	—	15	%
		Total Defectives	—	—	4	8		—	—	
4.11.5	Information Life Test: (1000 Hours)	Intermittent Life Test Conditions; Notes 17,21, 22								
	Packaging Requirements									
4.9.18.1.1	Carton Drop:	(d) Package Group 1; Carton Size D								

Caution to Electron Equipment Design Engineers. Special attention should be given to the temperature at which the tubes are to be operated. Reliability will be seriously impaired if maximum bulb temperature is exceeded. The life expectancy may be reduced if conditions other than those specified for life test are imposed on the tube and will be reduced appreciably if absolute maximum ratings are exceeded. Both reliability and performance will be jeopardized if filament voltage ratings are exceeded. Life and reliability of performance are directly related to the degree that regulation of the heater voltage is maintained at its center rated value.

Note 1: The reference point for heater-cathode potential shall be the positive terminal of the cathode resistor.

Note 2: If altitude rating is exceeded, reduction of instantaneous voltages (Ef excluded) may be required.

Note 3: The AQL for the combined defectives for attributes in Measurements Acceptance Tests, Part 1, excluding Inoperatives and Mechanical shall be one (1) percent. A tube having one (1) or more defects shall be counted as one (1) defective. MIL-STD-105, Inspection Level II shall apply.

Note 4: Variables Sampling Procedure:

Test for Lot-Average Acceptance:

Select a 35 tube sample at random from the lot. Number these tubes consecutively.

Determine the numerical average value of the characteristic as specified on the specification sheet of the 35 tube sample. If this value is on or above the LAL and on or below the UAL, accept for Lot Average.

Test for Lot Dispersion Acceptance:

Divide the 35 tube sample into seven (7) consecutive sub-groups of five (5) tubes each. Determine the range, R, of each sub-group for the measured characteristic specified on the Specification Sheet.

Compute the numerical average of the R values which is equal to $\overline{R}$. If $\overline{R}$ is equal to or less than the ALD, accept for Lot Dispersion.

Note 5: This test shall be conducted on the initial lot and thereafter on a lot approximately every 30 days. Once a lot has passed, the 30-day rule shall apply. In the event of lot failure the lot shall be rejected and the succeeding lot shall be subjected to this test. MIL-STD-105, sample size code letter F shall apply.

Note 6: Tubes shall be tested in a chamber under the conditions of pressure specified on the specification sheet. The specified voltage shall be applied between the leads of elements carrying E_b voltage and the adjacent leads. Voltage shall be of sinusoidal wave form with F = 60 cycles. Tubes showing evidence of corona or arcing shall be considered defective.

Note 7: The impedance of the plate and screen voltage supplies shall not exceed that of a 40 uf capacitor at 10 cps.

Note 8: Destructive tests:

Tubes subjected to the following destructive tests are not to be accepted under this specification.

4.9.5.3	Subminiature Lead Fatigue
4.9.20.5	Shock
4.9.20.6	Fatigue
4.11.7	Heater-Cycling Life Test
4.11.5	Intermittent Life Test

Note 9: When a manufacturer submits tubes for qualification approval, five extra tubes shall be submitted for lead fatigue testing. These may be electrical rejects.

Note 10: Leads may be clipped for application of voltages during impact.

Note 11: Glass strain procedures - All tubes subjected to this test shall have been sealed a minimum of 48 hours prior to conducting this test. All tubes shall be at room temperature immediately prior to beginning this test. The entire tube shall be immersed in water at not less than 97°C for 15 seconds and immediately thereafter immersed in water at not more than 5°C, for 5 seconds. The volume of water shall be large enough that the temperature will not be appreciably affected by the test. The method of submersion shall be in accordance with Drawing #245-JAN and such that a minimum of heat is conducted away by the holder used. The tubes shall be so placed in the water that no contact is made with the containing vessel, nor shall the tubes contact each other. After the 5-second submersion period at 5°C, the tubes shall be removed and allowed to return to room temperature on a wooden surface. After drying at room temperature for a period of 48 hours, the tubes shall be inspected and rejected for evidence of air leaks (Parag. 5.3.6.1, Inspection Instructions for Electron Tubes). Electrical rejects, other than inoperatives, may be used in the performance of this test.

Note 12: The no load to steady state full load regulation of the heater voltage supply shall be not more than 3.0 percent. This test shall be made on a lot by lot basis. A failure or defect shall consist of an open heater, open cathode circuit, heater-cathode short, or heater-cathode leakage in excess of the specified Heater-Cycling Life Test End Point limit.

Note 13: Stability Life Test:

a. Life test samples shall be selected from a lot at random in such a manner as to be representative of the lot. If such selection results in a sample containing tubes which are outside the initial specification sheet limits for the relevant life test end point characteristics, such tubes shall be replaced by randomly selected acceptable tubes.

b. Serially mark all tubes from the sample.

c. Record referenced characteristic measurements after a maximum operation of 15 minutes under specified voltage and current conditions on the entire sample.

d. Operate at life test conditions for one (1) hour (plus 30 minutes, minus 0 minutes). Life test shall be conducted as per paragraphs 4.11 and 4.11.5, MIL-E-1, except that the following shall be substituted for the third sentence of 4.11: The mean electrode potentials, except heater, may be established at values differing by not more than 5% from the specified values provided the same average electrode dissipations are obtained that occur with the specified voltages. Fluctuations of all voltages including heater voltage shall be as small as practical.

e. Record referenced characteristic measurements at the end of this test period. Referenced characteristic measurements shall be taken immediately following the test or tubes shall be preheated 15 minutes under specified test voltage and current conditions, and immediately measured. The 15 minutes preheat shall be considered as part of the test time.

f. A defective shall be defined as a tube having a change in referenced characteristic greater than that specified on the specification sheet.

g. A resubmitted lot must be subjected to all Measurements Acceptance Tests except Mechanical Inspection, Vibration, and Low Pressure Voltage Breakdown tests.

Note 14: MEANS OF ASSURING SURVIVAL RATE - The procedure for assuring the maintenance of a desirable quality level in terms of early life survival consists of a series of normal, reduced, and tightened inspection plans for use at 100 hours. The sample size is dependent upon lot size, and the transfer between normal, reduced, and tightened inspection is dependent upon quality history.

The selection of inspection scheme and sampling plan shall be in accordance with Inspection Instructions for Electron Tubes paragraph 5.3.4.2 through 5.3.4.3.1.3 inclusive except that paragraph 5.3.4.2.2 shall be modified by deleting the last part of the first sentence which states "....or if no lot in the last 20 lots inspected shall have been declared nonconforming for life test qualities". At the manufacturer's option, reduced inspection may be used if no lot in the last ten (10) lots inspected shall have been declared nonconforming.

INSPECTION PROCEDURE

a. Select sample in accordance with Note 13, Paragraph (a).

b. Tubes to be tested at 100 hours as provided in MIL-E-1(4.7.5). When any tap-short indication is obtained, the test shall be repeated. When any short indication is again obtained, the tube shall be rejected as an inoperative.

c. Determine the number of defective tubes at the 100 hour period.

d. If more than the allowable number of defectives occur, declare the lot nonconforming.

e. A resubmitted lot must be subjected to all Measurements Acceptance Tests except Mechanical Inspection, Vibration, and Low Pressure Voltage Breakdown tests.

Note 15: For Survival Rate Life Test, the equivalent Stability Life Test conditions shall be interpreted as having the same heater voltage (Ef) and heater-cathode voltage (Ehk) as the Stability Life Test; and the same interruptions of MIL-E-1 paragraph 4.11.5 as the Intermittent Life Test. The electrode voltages shall be such that the element dissipations are not less than 80 percent, nor more than 100 percent of Stability Life Test Plate Dissipation. These voltages are to be maintained within the limits of 50 and 200 percent of the Stability Life Test voltages.

Note 16: Intermittent Life Tests:

a. The first 20 tubes of the Stability Life Test sample which meet the measurements acceptance test limits for those characteristics specified as Intermittent Life Test End Points may be used for the Intermittent Life Test sample. In the event that a second Stability Life Test sample is used, the first 20 tubes from that sample which meet the above conditions shall be used.

b. In the event of failure of the first sample on Intermittent Life Test, take a completely fresh sample (MIL-STD-105 sample size code letter I) and stabilize it in accordance with the conditions of the Stability Life Test. Then select from it the first 40 tubes which meet the measurements acceptance test limits for those characteristics specified as Intermittent Life Test End Points.
Subject these 40 tubes to the Intermittent Life Test. Acceptance shall then be based on combined results from the first and second samples.

c. As an alternate method, the manufacturer may select his life test samples as described in Note 13, paragraph (a).

d. Regular life test shall be conducted for 500 hours and acceptance shall be on the basis of the requirements indicated on the Specification Sheet.

e. The life test sample shall be read at the following times:

0 hours
500 hours (plus 48 hours; minus 24 hours)

Additional reading periods may be used at the discretion of the electron tube manufacturer.

f. Acceptance Criteria: The lot shall be considered satisfactory for acceptance provided that the specified allowable defects are not exceeded and the change of the average of any characteristic in the life test sample specified for life test control of averages is not exceeded. The average percentage change shall be ascertained from the determination of the individual changes for each tube in the life test sample from the zero (0) hour value for the referenced characteristic or characteristics. For purposes of computation of this average percentage change, the absolute values of the individual changes for each tube in the life test sample shall be used. Any tube found inoperative during life testing shall not be considered in the calculation of this average.

g. A resubmitted lot must be subjected to all Measurements Acceptance Tests except Mechanical Inspection, Vibration, and Low Pressure Voltage Breakdown.

h. Not more than one (1) accidental breakage shall be allowed in the life test sample. If one (1) life test tube is accidentally broken, acceptability of the life test sample shall be based upon the remaining tubes in the sample provided that the broken tube was not known to be a defective.

Note 17: Envelope Temperature is defined as the highest temperature indicated when using a thermocouple of #40 BS or smaller diameter elements welded to a ring of .025 inch diameter phosphor bronze in contact with the envelope. Envelope Temperature requirement will be satisfied if a tube, having bogie Ib (±5%) under normal test conditions, is determined to operate at minimum specified temperature at any position on the life test rack.

Note 18: Order for evaluation of life test defects:- If a tube is defective for more than one attribute characteristic, the lowest numbered characteristic in this table, for which the tube failed, shall constitute the failure.

(1) Inoperative
(2) Heater Current
(3) Grid Current
(4) Change in Power Output(1) ΔP_o
(5) Power Output(2) $\Delta_{Ef} P_o$
(6) Heater-Cathode Leakage
(7) Insulation of Electrodes

Note 19: An inoperative as referenced in Life Test is defined as a tube having one (1) or more of the following defects: discontinuity (Ref. MIL-E-1, par. 4.7.1), shorts (Ref. MIL-E-1, par. 4.7.2), air leaks (Ref. Inspection Instructions for Electron Tubes, par. 5.3.6.1).

Note 20: Prior to this test, the tube shall be preheated a minimum of five minutes at the conditions indicated below. Three minute test is not permitted. Test at preheat conditions within 3 seconds after preheating. Grid Current(2) shall be the last test performed on the sample selected for the Grid Current(2) test.

Ef	Ec1	Ec2	Ec3	Eb	Rk	Rg1
V	Vdc	Vdc	Vdc	Vdc	ohms	Meg
7.5	0	100	0	100	220	0.47

Note 21: On Information Life Tests, read same characteristics as for Intermittent Life Test. Limits do not apply. Six (6) copies of these data shall be forwarded to the Armed Services Electron Tube Committee for their information and file.

Note 22: This life test shall be conducted on a minimum of one sample of ten tubes each month of production. This sample shall be selected as the first ten serially marked operative tubes from a completed Intermittent Life Test sample. This life test shall be classified as a destructive test. Read at 1000 hours.

Note 23: Power Output (2) is the percent change in Power Output (1) of an individual tube resulting in the change in Ef.

Note 24: Reference specification shall be of the issue in effect on the date of invitation for bid.

K1001	Test	Test Conditions	AQL %	Insp. Level	Symbol	Limits Min.	LAL	Bogey	UAL	Max.	ALD	Units
11.3	Fatigue	Vh = 6.9V switched 1 min on, 3 mins off Va = Vg2 = 0 Frequency = 170 c/s Min pk accel = 5g Duration = 30,39,30hrs.		IA								
	Post Fatigue Tests											
	Vibration Noise Output	Va(b) = 250V Vg1 = -17V RL = 2k	2.5		Va AC	-	-	-	-	100		mV (pk-p
	Heater-cathode Leakage Current	Vhk = ± 100V	2.5		Ihk	-	-	-	-	30		uA
	Reverse Grid Current	Rg1 = 500k Max.	2.5		Ig1	-	-	-	-	1.5		uA
	Mutual Conductance		2.5		gm	2.5	-	-	-	5.0		mA/V
11.4	Shock	No voltages Hammer angle = 30°		IA								
	Post Shock Tests											
	Vibration Noise Output	Va(b) = 250V Vg1 = -17V RL = 2k	2.5		Va AC	-	-	-	-	100		mV (pk-p
	Heater-cathode Leakage current	Vhk = ± 100V	2.5		Ihk	-	-	-	-	30		uA
	Reverse Grid Current	Rg1 = 500k Max.	2.5		Ig1	-	-	-	-	1.5		uA
	Mutual Conductance		2.5		gm	2.5	-	-	-	5.0		mA/V
	GROUP F											
AVI/5	Life	Va=250V;Vg2=200V; Vhk=100V;Rg1=500k; Rk=1000										
AVI/5.1	Stability Life Test											
	Change in Pulse Anode Current	Note 1	1.0	I	ΔIa (pk)	-	-	-	-	20		%
AVI/5.3	Intermittent Life Test											
AVI/5.6	Life Test End-point (500 hrs)		6.5	IA								
	Inoperatives		2.5									
	Heater Current		2.5		Ih	0.27	-	-	-	0.33		A
	Heater-cathode Leakage Current	Vhk = ± 100V	2.5		Ihk	-	-	-	-	10		uA
	Reverse Grid Current	Rg1 = 500k Max	2.5		Ig1	-	-	-	-	1.0		uA
	Pulse Anode Current	Note 1	2.5		Ia(pk)	100	-	-	-	-		mA
	do Average change				ΔIa(pk)	-	-	-	-	25		%
	Negative Grid Voltage		4.0		Vg1	7.4	-	-	-	15.8		V
	Insulation		4.0		R							
		Vg1 - all = -100V				50	-	-	-	-		M Ω
		Vg2 - all = -300V				50	-	-	-	-		M Ω
		Va - all = -300V				50	-	-	-	-		M Ω

MINISTRY OF SUPPLY - DLRD/RRE

VALVE ELECTRONIC CV4040

Specification MOA/CV4040 (AL.1) Issue 2 Dated 6.11.56 To be read in conjunction with K1001, BS448 and BS1409	SECURITY Specification: UNCLASSIFIED Valve: UNCLASSIFIED

Indicates a change ←

TYPE OF VALVE - Reliable Pulse Tetrode

CATHODE - Indirectly-heated

ENVELOPE - Glass

PROTOTYPE - CV416

MARKING

See K1001/4

RATING All limiting values are absolute			Note
Heater Voltage	(V)	6.3	
Heater Current	(A)	0.3	
Max. Anode Voltage	(V)	600	
Max. Anode Dissipation	(W)	3.5	
Max. Screen Voltage	(V)	600	
Max. Screen Dissipation	(W)	0.7	
Max. Heater-Cathode Voltage	(V)	100	
Mutual Conductance	(mA/V)	8.3	A
Max. Bulb Temperature	(°C)	165	B
Max. Shock (short duration)	(g)	500	
Max. Acceleration (continuous operation)	(g)	2.5	

BASE

See BS448/B7G/1.1

CONNECTIONS

Pin	Electrode	
1	Control Grid	g1
2	Cathode	k
3	Heater	h
4	Heater	h
5	Anode	a
6	Beam Plates	bp
7	Screen Grid	g2

CAPACITANCES (pF)	
Cin (nom)	6.2
Cout (nom)	5.2
Ca, g1 (nom)	0.03

DIMENSIONS

See BS448/B7G/2.1

Size Ref. No. 2

Dimensions (mm)	Min.	Max.
A Seated height	-	47.5
B Diameter	16.0	19.0
D Overall length	-	54.5

MOUNTING POSITION

Any

NOTES

A. Tested at Va = Vg2 = 250V; Vg1 = -6.25V (Ia = 6mA approx. tested under pulsed conditions).

B. Caution to Electronic Equipment Design Engineers: Special attention should be given to the temperature of valves to be operated in aircraft. Reliability will be seriously impaired if the maximum bulb temperature is exceeded. The life expectancy may be reduced if conditions other than those specified for life test are imposed on the valve and will be reduced appreciably if absolute maximum ratings are exceeded. Both reliability and performance will be jeopardised if heater voltage ratings are exceeded: life and reliability performance are directly related to the degree that regulation of the heater voltage is maintained at its centre-rated value.

Z.14234.R.

To be performed in addition to those applicable in K1001
and in the specified order unless otherwise agreed with the Inspecting Authority.

Test Conditions - unless otherwise specified

Vh (V)	Va (V)	Vg2 (V)	Ia (mA)
6.3	200	200	17.0

K1001	Test	Test Conditions	AQL %	Insp. Level	Symbol	Limits Min.	LAL	Bogey	UAL	Max.	ALD	Units
7.1	Glass Strain	No voltages	6.5	I			-					
	GROUP A											
5.2	Insulation			100%	R							
		Vg1 - all = -100V				100	-	-	-	-		M Ω
		Vg2 - all = -300V				100	-	-	-	-		M Ω
		Va - all = -300V				100	-	-	-	-		M Ω
	Reverse Grid Current	Rg1 = 500k Max		100%	Ig1	-	-	-	-	0.75		uA
	GROUP B	Combined AQL	1.0									
	Heater Current		0.65	II	Ih	0.27	-	0.30	-	0.33		A
	Heater-cathode Leakage Current	Vhk = ± 100V	0.65	II	Ihk	-	-	-	-	10		uA
				V2		-	-	-	2	-		uA
(AM1)	Negative Grid Voltage		0.65	II	Vg1	8.4	11.3	12.0	12.7	15.8	9.7	V
				V2	-	-	10.8	12.5	14.2	-	1.8	V
	Negative Grid Voltage for cut-off	Ia = 100uA	0.65	II	Vg1	-	-	-	-	38		V
	Screen Current		0.65	II	Ig2	2.05	-	-	-	5.1		mA
	Mutual Conductance		0.65	II	gm	2.6	-	-	-	5.0	-	mA/V
				V2		-	3.1	3.6	4.0	-	1.1	mA/V
	GROUP C	Combined AQL	6.5									
	Change in Vg2	Vg1 reduced by 2V, Vg2 reduced to maintain Ia = 17mA	2.5	I	ΔVg2	15	-	-	-	25		V
	Pulse Anode Current	Va = Vg2 = 300V Vg1 = - 100V Pulse amp = +100V tp = 10 to 15 usecs Duty cycle = .0.25	2.5	I	Ia (pk)	133	-	-	-	-		mA
	Vibration Noise Output	Va(b) = 250V Vg1 = -17V RL = 2k	2.5	I	Va AC	-	-	-	-	60		mV (pk-pk)
	GROUP D											
	Grid Emission	Vh = 7.0V Vg1 = -38V Rg1 = 500K	6.5	IA	Ig1	-	-	-	-	-1.5		uA
	Capacitance	Measured on a 1 Mc/s bridge with the valve mounted in a fully screened socket. Shielded	6.5	IC	C out	4.4	-	5.2	-	6.1		pF
					C in	5.2	-	6.2	-	7.1		pF
					Cg1	-	-	0.03	-	.05		pF
7.2	Base Strain	No voltages	6.5	IA								
	GROUP E											
11.2	Resonance Search	Va(b) = 250V Vg1 = -17V RL = 2k Frequency range 25-500 c/s	2.5	IC								
	Vibration Noise Output				Va AC	-	-	-	-	Record		mV (pk-pk)
	Resonant Frequency				f	200	-	-	-	Record		c/s

MINISTRY OF SUPPLY - DLRD/RRE

VALVE ELECTRONIC

CV 4043

Specification MOS /CV4043 Issue 2 Dated 6.11.56 To be read in conjunction with K1001 BS448 & BS1409	SECURITY Specification: UNCLASSIFIED Valve: UNCLASSIFIED

Indicates a change →

TYPE OF VALVE - Reliable Beam Tetrode

CATHODE - Indirectly-heated

ENVELOPE - Glass

PROTOTYPE - CV2136

MARKING

K1001/4

BASE

B9A

See B.S.448:1953
B9A/1.1

RATING

All limiting Values are absolute

			Note
Heater Voltage	(V)	6.3	
Heater Current	(A)	0.45	
Max. Anode Voltage	(V)	350	
Max. Anode Dissipation	(W)	13.2	
Max. Screen Grid Voltage	(V)	310	
Max. Screen Grid Dissipation	(W)	2.1	
Max. Heater-cathode Voltage	(V)	±90	
Mutual Conductance	(mA/V)	4.1	B
Anode Impedance	(ohms)	50,000	B
Max. Bulb Temperature	(°C)	250	C
Max. Shock (short duration)	(g)	500	
Max. Acceleration (continuous operation)	(g)	2.5	

CAPACITANCES (pF)

Cag (max.)	0.5
Cin (nom.)	8.3
Cout (nom.)	7.0

CONNECTIONS

Pin	Electrode	
1	Control Grid	g^1
2	Control Grid	g^1
3	Cathode	k
4	Heater	h
5	Heater	h
6	No connection	NC
7	Anode	a
8	Screen Grid	g^2
9	Suppressor	g^3

DIMENSIONS

See B.S.448 : 1953
B9A/2.1 Size Ref No.3

Dimensions (mm)	Min.	Max.
A. Seated height	-	60.5
C. Diameter	19.0	22.2
D. Overall length	-	67.5

MOUNTING POSITION

Any

NOTES

B. Measured at Va = Vg2 = 250V; Vg3 = 0; Vg1 = -12.5V

C. Note to Electronic Equipment Design Engineers : Special attention should be given to the temperature of valves to be operated in aircraft. Reliability will be seriously impaired if the maximum bulb temperature is exceeded. The life expectancy may be reduced if conditions other than those specified for life test are imposed on the value and will be reduced appreciably if absolute maximum ratings are exceeded. Both reliability and performance will be jeopardised if heater voltage ratings are exceeded: life and reliability performance are directly related to the degree that regulation of the heater voltage is maintained at its centre-rated value.

To be performed in addition to those applicable in K1001
and in the specified order unless otherwise agreed by the Inspection Authority

Test Conditions - unless otherwise specified

Vh (V)	Va (V)	Vg1 (V)	Vg2 (V)	Vg3 (V)
6.3	250	-12.5	250	0

K1001	Test	Test Conditions	AQL %	Insp. Level	Symbol	Limits Min	LAL	Dogey	UAL	Max	ALD	Units
7.1	Glass Strain	No voltages	6.5	I								
	GROUP A											
	Insulation			100%	R							
		Vg1 - all = -100V				100	-	-	-	-		M
		Vg2 - all = -300V				100	-	-	-	-		M
		Va - all = -300V				100	-	-	-	-		M
	Reverse Grid Current	Rg1 = 500k Max		100%	Ig1	-	-	-	-	2.0		uA
	GROUP B	Combined AQL	1.0									
	Heater Current		0.65	II	Ih	0.41	-	-	-	0.49		A
	Heater-cathode Leakage Current	Vhk = ± 90V	0.65	II	Ihk	-	-	-	-	20		uA
				V2	Ihk	-	-	-	5	-		uA
	Anode Current	Note 1	0.65	II	Ia	33	-	-	-	57		mA
				V2	Ia	-	39	45	51	-	13.3	mA
	Screen Grid Current		0.65	II	Ig2	0.6	-	-	-	7.5		mA
	Mutual Conductance		0.65	II	gm	3.0	-	-	-	5.2		mA/V
				V2	gm	-	3.5	4.1	4.7	-	1.33	mA/V
	GROUP C	Combined AQL	6.5									
	g3 Continuity	Vg3 = 250V Note 2	2.5	I								
	Power Output	RL = 5k Input signal = 8.8V r.m.s. Frequency = 1 kc/s	2.5	I	P out	3.6	-	-	-	-		W
	Reverse Grid Current	Vh=6.3V; Va=350V; Vg2=305V; Ia=50mA; Rg1=500k; Note 3	2.5	I	Ig1	-	-	-	-	2.0		uA
	Emission	Vg1 = Vg2 = Vg3 = Va = 30V	2.5	I	Ia	100	-	-	-	-		mA
11.1	Vibration Noise Output	Va(b) = 250V Vg1 = -25V RL = 2k	2.5	I	Va AC	-	-	-	-	60		mV r.m.s.
	GROUP D											
7.2	Base Strain		6.5	IA								
	Capacitance		6.5	IC								
		Measured on a 1 Mc/s bridge with the valve mounted in a fully screened socket. No shield.			Cag1	-	-	-	-	0.5		pF
					C in	6.6	-	-	-	10.0		pF
					C out	5.5	-	-	-	8.5		pF

TESTS (Cont'd)

CV4043

K1001	Test	Test Conditions	AQL %	Insp. Level	Symbol	Limits Min	LAL	Bogey	UAL	Max.	ALD	Units
	GROUP E											
11.2	Resonance Search	Va(b) = 250V Vg1 = -25V RL = 2k Frequency range = 25-500 c/s	2.5	IC								
	Vibration Noise Output				Va AC	-	-	-	-	Record		mVrms
	Resonant Frequency				f	200	-	-	-	-		c/s
11.3	Fatigue	Vh = 6.3V switched 1 min. on, 3 mins. off. Va = Vg2 = 0 Min pk accel = 5g Frequency = 170 c/s Duration = 30,39,30 hrs.		IA								
	Post Fatigue Tests	Combined AQL	6.5									
	Vibration Noise	Note 4	2.5		Va AC	-	-	-	-	120		mVrms
	Heater-cathode Leakage Current	Vhk = ± 90V	2.5		Ihk	-	-	-	-	40		uA
	Reverse Grid Current	Rg1 = 500k Max	2.5		Ig1	-	-	-	-	4.0		uA
	Power Output	Note 5	2.5		P out	2.3	-	-	-	-		W
11.4	Shock	Hammer angle = 30° No voltages		IA								
	Post Shock Tests	Combined AQL	6.5									
	Vibration Noise Output	Note 4	2.5		Va AC	-	-	-	-	120		mVrms
	Heater-cathode Leakage Current	Vhk = ± 90V	2.5		Ihk	-	-	-	-	40		uA
	Reverse Grid Current	Rg1 = 500k Max	2.5		Ig1	-	-	-	-	4.0		uA
	Power Output	Note 5	2.5		P out	2.3	-	-	-	-		W
	GROUP F											
A VI/5	Life	Vg1=0 Rg1=100k - 500k Rk =270 ± 10%										
A VI/5.1	Stability Life Test											
	Change in Anode Current		1.0	I	Ia	-	-	-	-	7.5		%
	Change in Mutual Conductance		1.0	I	Δ gm	-	-	-	-	5		%
A VI/5.3.	Intermittent Life Test			IA								
	Life Test End-point (500 hours)		6.5									
A VI/5.6	Inoperatives		2.5									
	Power Output	Note 5	2.5		P out	2.3	-	-	-	-		W
	Reverse Grid Current	Rg = 500k Max	2.5		Ig1	-	-	-	-	4.0		uA
	Heater-cathode Leakage Current	Vhk = ± 90V	2.5		Ihk	-	-	-	-	40		uA
	Mutual Conductance		2.5		gm	2.55	-	-	-	5.2		mA/V
	do Average change				Δ gm	-	-	-	-	15		%

TESTS (Cont'd)

K1001	Test	Test Conditions	AQL %	Insp. Level	Symbol	Limits						Units
						Min.	LAL	Bogey	UAL	Max.	ALD	
A VI/ 5.6	Insulation		2.5		R							
		Vg1 - all = -100V				50	-	-	-	-		M
		Vg2 - all = -300V				50	-	-	-	-		M
		Va - all = -300V				50	-	-	-	-		M
	Life Test End-point (1000 hours)		10.0									
	Inoperatives		4.0									
	Power Output		4.0		P out	2.0	-	-	-	-		W
	Reverse Grid Current	Rg1 = 500k Max	4.0		Ig1	-	-	-	-	5.0		uA
	Heater-cathode Leakage Current	Vhk = ± 90V	4.0		Ihk	-	-	-	-	50		uA
	Mutual Conductance		4.0		gm	2.3	-	-	-	-		mA/V
	GROUP C											
A IX/ 2.5	Electrical re-test after 28-day holding period			1.00%								
A VI/ 5.6	Inoperatives		0.5									
	Reverse Grid Current	Rg1 = 500k Max	0.5		Ig1	-	-	-	-	2.0		uA

NOTES

1. With Vg1 applied to Pins 1 and 2 in turn, Ia shall show no change.
2. During this test Ig2 shall rise when g3 is connected to g2.
3. Pre-heat for 5 minutes under the test conditions. During the test Ig1 shall not be rising or out of limit after 10 minutes.
4. The conditions for Vibration Noise specified in Group C shall apply.
5. The conditions for Power Output specified in Group C shall apply.

Valve Electronic Type CV 2136

TYPICAL OPERATING CONDITIONS

Class A Amplifier (Single Ended) Triode connection (Pins 7 and 8 strapped)

Heater voltage	6.3	6.3	volts
Anode voltage	250	285	volts
Grid voltage	-13.5	-19	volts
Autobias resistor (R_k)	300	470	ohms
Anode impedance (r_a)	2090	2250	ohms
Anode current (no signal)	45	40	mA
Amplification factor (μ)	9.2	9.0	
Mutual conductance	4.4	4.0	mA/V
Anode load resistor (R_a)	4000	4500	ohms
Peak A.F. grid voltage	13.5	19	volts
Total harmonic distortion	3.5	6.0	%
Power output	0.75	1.35	watts

Class A Amplifier Push Pull Triode connection (Pins 7 and 8 strapped)

Heater voltage	6.3	6.3	volts
Anode voltage	250	285	volts
Grid voltage	-13.5	-19	volts
Autobias resistor (R_k)	150	240	ohms
Anode current (no signal)	90	78	mA
Output load (anode-anode) (R_a - a)	4000	4500	ohms
Peak A.F. grid voltage (grid-grid)	27	38	volts
Total harmonic distortion	0.4	0.5	%
Power output	1.7	3.1	watts

Note: Values given are for two valves.

Class A Amplifier (Single ended) Tetrode connection

Heater voltage	6.3	6.3	6.3	6.3	6.3	6.3	volts
Anode voltage	180	180	250	250	315	315	volts
Screen voltage	180	180	250	250	225	225*	volts
Grid voltage	-8.5	-	-12.5	-	-13	-	volts
Autobias Resistor	-	250	-	240	-	330	ohms
Anode current	29	29	45	47	34	34	mA
Screen current	3.0	3.0	4.5	5.0	2.2	2.2	mA
Anode impedance (r_a)	58000	-	52000	-	77000	-	ohms
Mutual conductance	3.7	-	4.1	-	3.75	-	mA/V
Anode load resistor	5500	5500	5000	5000	8500	8500	ohms
Peak A.F. grid voltage	8.5	9.0	12.5	13.5	13	13.5	volts
Total harmonic distortion	7.0	7.5	7.5	8	10	11.5	%
Power output	2.0	1.7	4.5	4.5	5.2	5.0	watts

*The screen voltage, where lower than the anode voltage, should be obtained from a potentiometer across the H.T. line to chassis adequately by-passed to A.F. signals rather than by means of a series resistor to avoid fluctuation of the screen voltage as the current drives up near maximum output.

Valve Electronic Type CV 2136

Class A Amplifier (Push Pull) Tetrode connection

Heater voltage	6.3	6.3	6.3	volts
Anode voltage	250	250	315	volts
Screen voltage	250	250	250	volts
Grid voltage	-12.5	-	-	volts
Autobias resistor	-	120	125	ohms
Peak A.F. grid-grid voltage	25	26	28	volts
No signal anode current	90	94	98	mA
Max. signal anode current	96	98	102	mA
No signal screen current	9	9.5	8.5	mA
Max. " " "	13.5	13.5	11.5	mA
Anode impedance (r_a)	52000	-	-	ohms
Mutual conductance	4.1	-	-	mA/V
Output load (anode to anode)	10000	10000	10000	ohms
Total harmonic distortion	2	2.5	2.5	%
Power output	9	9	12.5	watts

Note: Values given are for two valves.

Class AB1 Amplifier (Push Pull) Tetrode connection

Heater voltage	6.3	6.3	6.3	6.3	volts
Anode voltage	250	250	285	285	volts
Screen voltage	250	250	285	285	volts
Grid voltage	-15	-	-19	-	volts
Autobias resistor	-	200	-	260	ohms
Peak A.F. grid-grid voltage	30	34	38	45	volts
No signal anode current	70	70	70	70	mA
Max. " " "	80	74	94	78.5	mA
No signal screen "	5	5	4	4	mA
Max. " " "	11.5	11.5	11.5	10	mA
Load resistance (anode-anode)	10000	10000	8000	8000	ohms
Total harmonic distortion	3	3.5	1.8	1	%
Power output	10	10	13	12	watts

Note: Values given are for two valves.

Class AB2 Amplifier (Push Pull) Tetrode connection

Heater voltage	6.3	volts
Anode voltage	315	volts
Screen voltage	285	volts
Grid voltage	-19	volts
Peak A.F. grid-grid voltage	80	volts
No signal anode current	70	mA
Max. " " "	155	mA
No signal screen "	4	mA
Max. " " "	16	mA
Peak grid input power	400	mW
Load resistor (anode-anode)	5000	ohms
Total harmonic distortion	7	%
Power output	30	watts

Note: Values given are for two valves.

Valve Electronic Type CV 2136

It is essential for Class AB2 operation that the regulation of the anode, screen and grid bias supplies is such that the voltages remain constant within 5% between no signal and maximum signal conditions. The driver stage should be capable of supplying the grids of the two valves with the specified peak voltages with low distortion. The effective resistance per grid circuit represented by the driver valve and/or transformer should not exceed 500 ohms and the effective impedance represented by leakage inductance or equivalent at the highest desired response frequency should not exceed 700 ohms.

General recommendations

(a) Audio Frequencies

Due to the relatively high slope of this valve, trouble may be experienced due to parasitic oscillation, and it is advised that a resistor of 100 ohms is wired in series with the anode, directly connected to the valve holder contact. This resistor should be reduced to 47 ohms in the case of Class AB2 operation.

A series grid resistor may also be employed, if necessary wired directly to the valve holder grid contact, but the value must be carefully chosen bearing the frequency response in mind. Such a resistor should never exceed 100,000 ohms for Class A operation, and should not be employed for Class AB2 operation.

The type of input coupling used should not introduce too much resistance into the grid circuit. It is preferable that such resistance does not exceed 100,000 ohms except in the case of Class A operation under automatic bias conditions where the value may be as high as 500,000 ohms.

(b) Radio Frequencies

Whilst these valves are not primarily intended for operation as an oscillator or as a frequency multiplier they may be used for such purpose up to a maximum frequency of 160 Mc/s.

The D.C. grid current must not at any time exceed 3 mA.

It is preferable that the screen supply voltage should not be obtained via a series dropping resistor, and the D.C. bias should be obtained from a fixed bias or from a combination of grid leak bias and a cathode automatic bias resistor.

The bias required as a Class C frequency multiplier is of the order of -80 volts and the output with normal circuit practice is adequate at 2nd or 3rd harmonic to drive an R.F. amplifier employing valves such as the CV.124 or CV.2129.

When these valves are used as crystal oscillators in a Tri-tet circuit care should be exercised to ensure a safe crystal current if the screen voltage is 180 volts or higher.

Valve Electronic Type CV 2136

If this valve is used as a Class 'B' or Class 'C' R.F. amplifier neutralisation will normally be necessary at the higher frequencies. Power amplifier operation is not recommended above 100 Mc/s due to the relatively high input drive required. At this and higher frequencies it is more economical to use the valve as a frequency multiplier.

Keying should not be achieved by disconnection of the cathode unless a resistor of not more than 100,000 ohms is permanently connected between cathode and chassis earth.

Under no circumstances should the anode tank circuit of a Class 'B' or 'C' amplifier be tuned through resonance with the aerial or succeeding valve load disconnected. Such procedure causes a violent drop in the anode current and a corresponding increase in screen current which may damage the screen, together with a very high voltage between anode and other electrodes which is liable to break down the insulation of the button base.

Typical operation

R.F. Doubler	Continuous ratings as a doubler without modulation		
D.C. anode voltage	250	300	volts
D.C. screen voltage	250	250	volts
D.C. screen series resistor	-	9100	ohms
D.C. grid voltage	-60	-70	volts
D.C. grid resistor	20000	23000	ohms
D.C. cathode resistor	0	0	ohms
Peak R.F. grid voltage	100	100	volts
D.C. anode current	52	46	mA
D.C. screen current	5.0	5.5	mA
D.C. grid current (approx.)	3.0	3.0	mA
Driving power (")	0.3	0.3	watts
Power output	5.0	5.5	watts*

*Measured with typical tank coil doubling from 7 - 14 Mc/s.

R.F. Trebler	Continuous ratings as a trebler without modulation	
D.C. anode voltage	300	volts
D.C. screen voltage	250	volts
D.C. screen series resistor	12500	ohms
D.C. grid voltage	-94	volts
D.C. cathode resistor	500	ohms
D.C. grid resistor	23000	ohms
Peak R.F. grid voltage	150	volts
D.C. anode current	46	mA
D.C. screen current	4	mA
D.C. grid current (approx.)	3	mA
Driving power (approx.)	0.45	watts
Power output	2.5	watts*

*Measured with typical tank coil trebling from 7 - 21 Mc/s.

CV 2136

TYPICAL

OPERATING

CURVES.

DATA SHEET

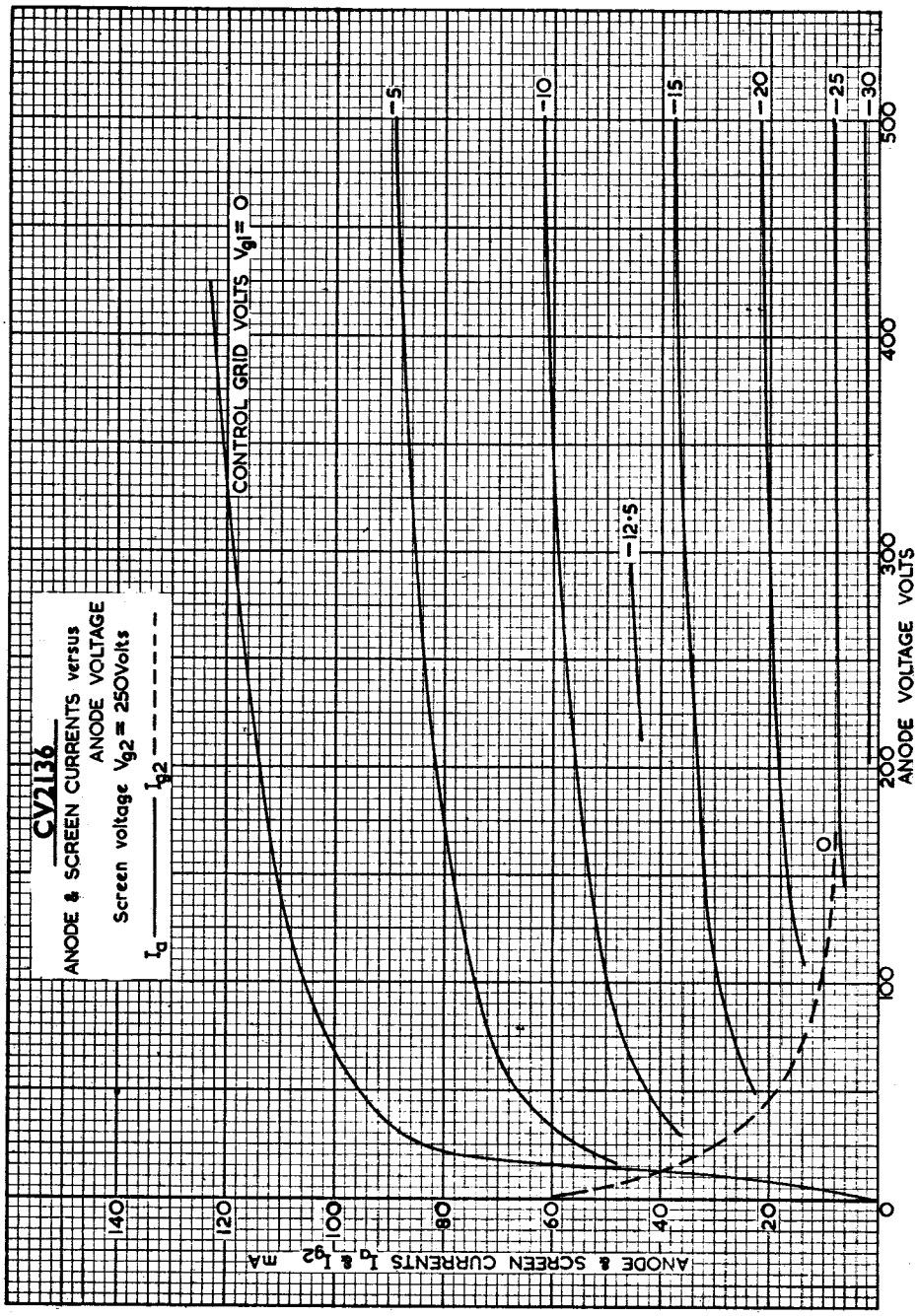

CV 2136/d/14-1-53/5

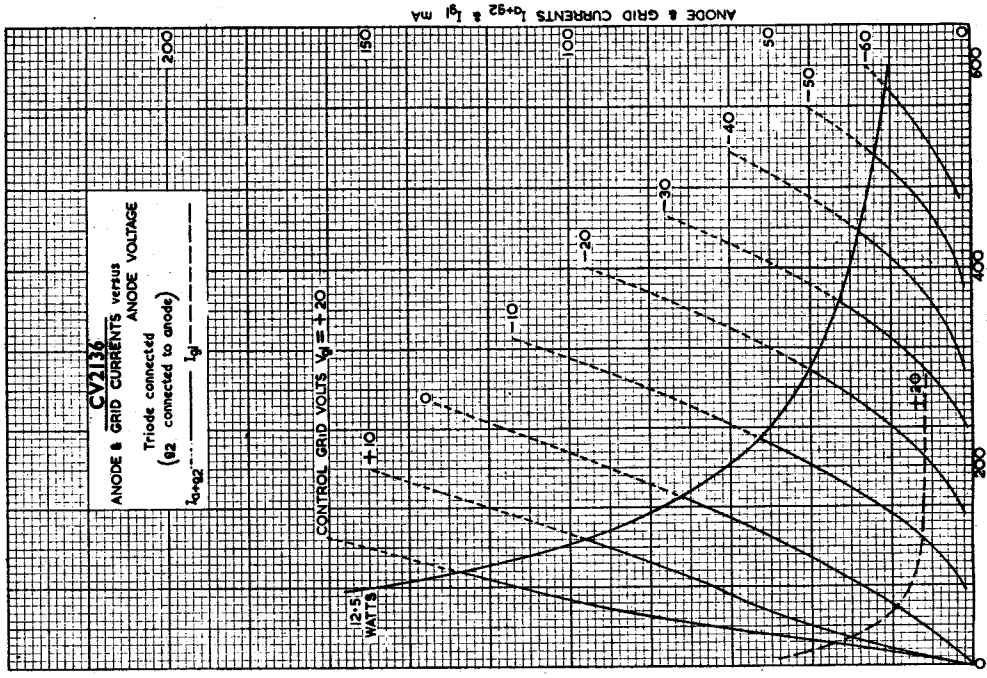
CV2136
ANODE & GRID CURRENTS versus ANODE VOLTAGE
Triode connected
(g2 connected to anode)
Ia+g2 ——— Ig1 — — — —
CONTROL GRID VOLTS Vg1 = +20
+10
0
-10
-20
-30
-40
-50
-60
12·5 WATTS
ANODE & GRID CURRENTS Ia+g2 & Ig1 mA
ANODE VOLTAGE VOLTS
0
50
100
150
200
400
600
800

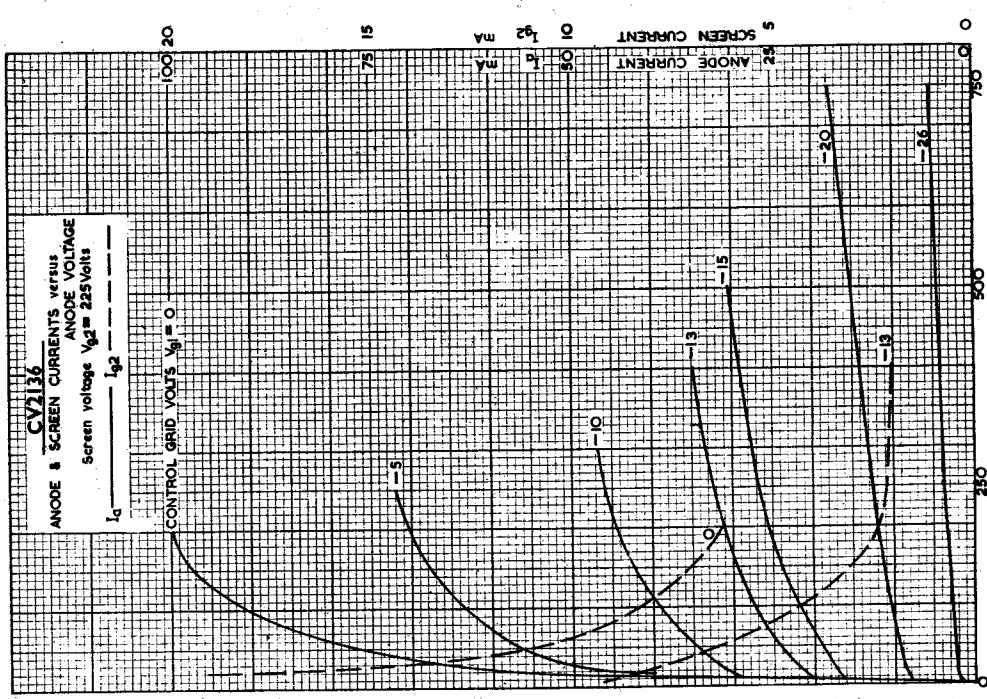
CV2136
ANODE & SCREEN CURRENTS versus ANODE VOLTAGE
Screen voltage Vg2 = 225Volts
Ia ——— Ig2 — — — —
CONTROL GRID VOLTS Vg1 = 0
-5
-10
-15
-13
-20
-26
ANODE CURRENT Ia mA
SCREEN CURRENT Ig2 mA
ANODE VOLTAGE VOLTS
0
5
10
15
20
25
50
75
100
250
500
750

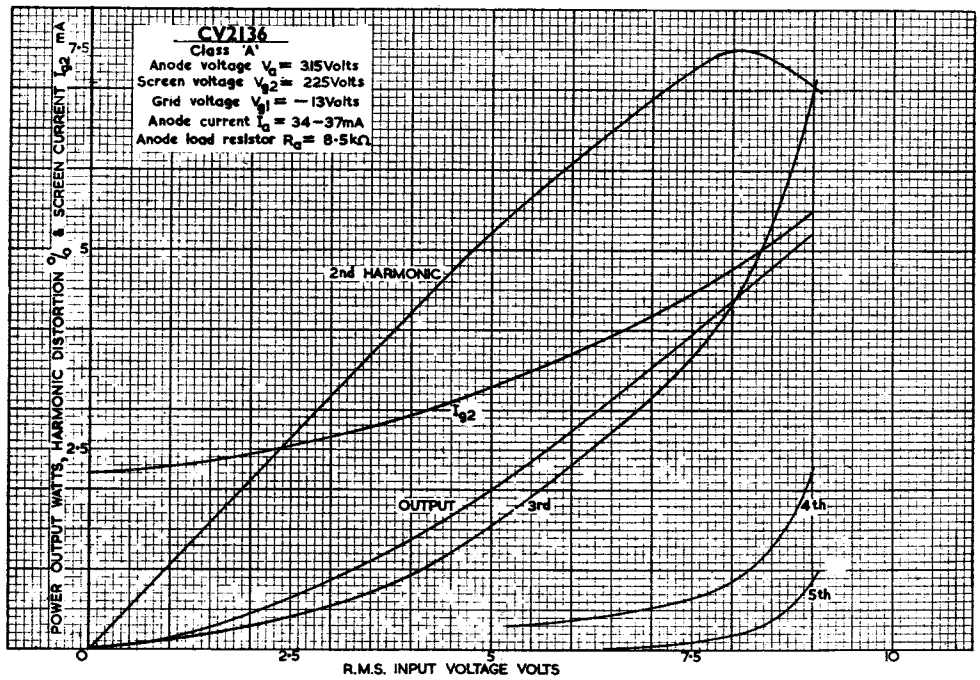

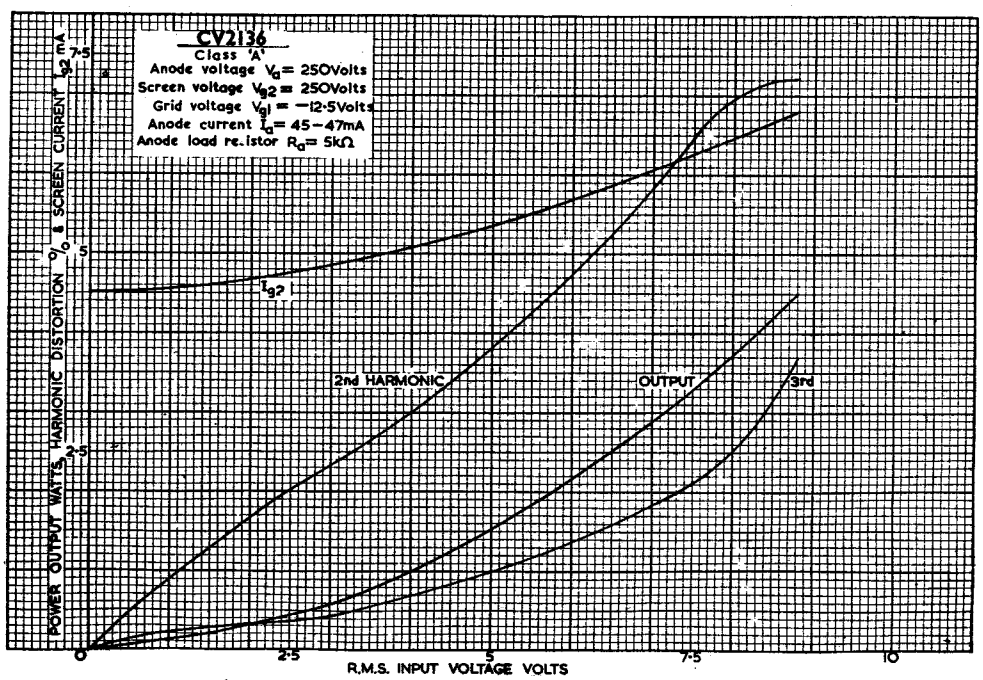

CV 2136/d/14-1-53/7

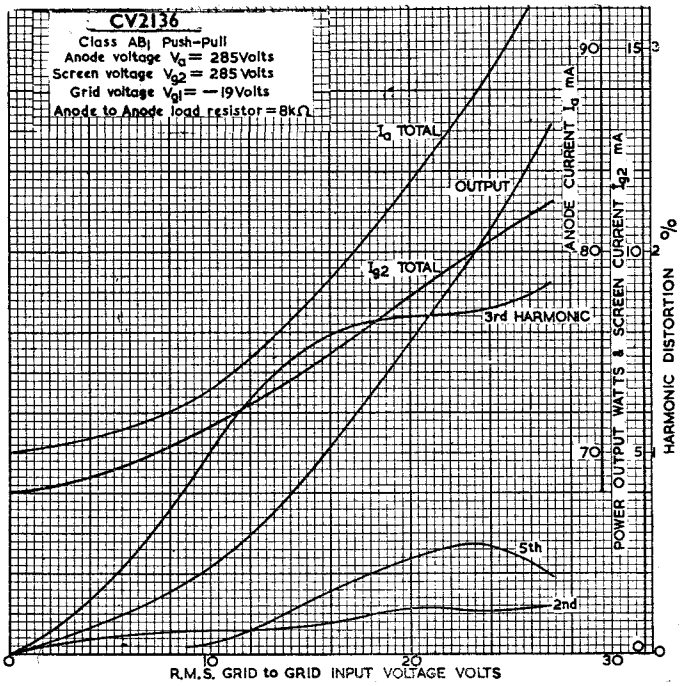

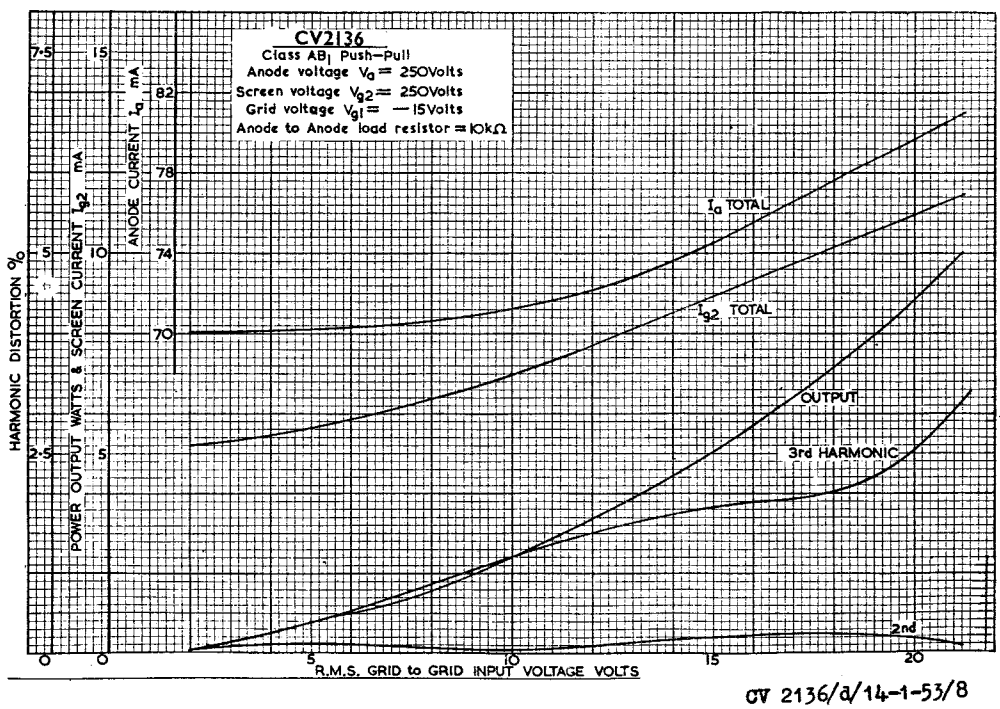

CV 2136/a/14-1-53/8

DATA SHEET

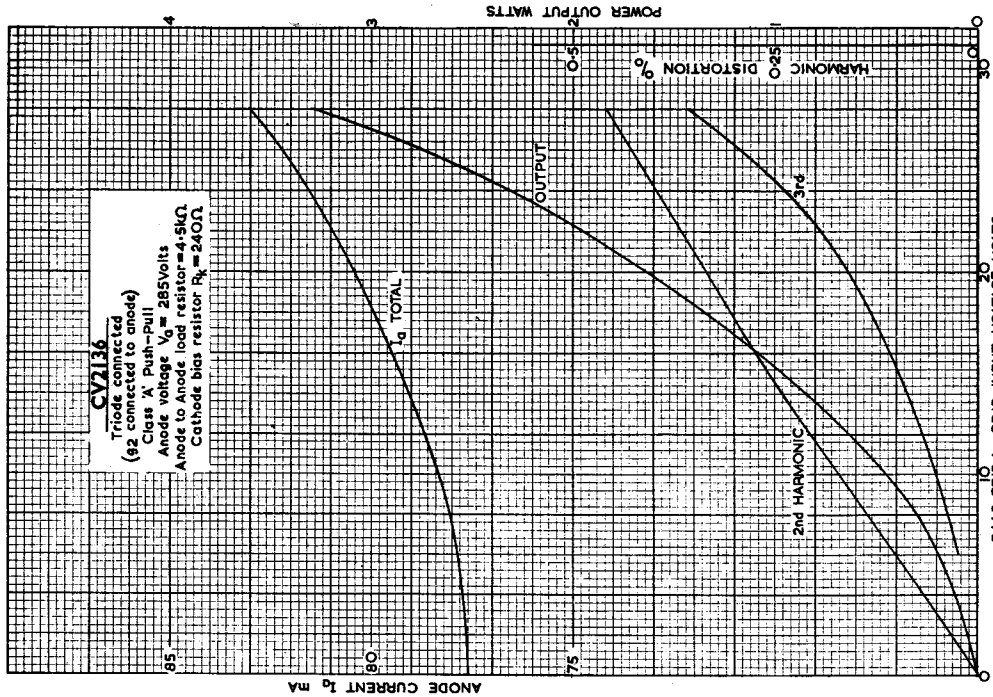
CV2136
Triode connected
(g2 connected to anode)
Class 'A' Push-Pull
Anode voltage Va = 285Volts
Anode to Anode load resistor=4·5KΩ
Cathode bias resistor Rk=240Ω
Ia TOTAL
OUTPUT
3rd
2nd HARMONIC
ANODE CURRENT Ia mA
HARMONIC DISTORTION %
POWER OUTPUT WATTS
R.M.S. GRID to GRID INPUT VOLTAGE VOLTS

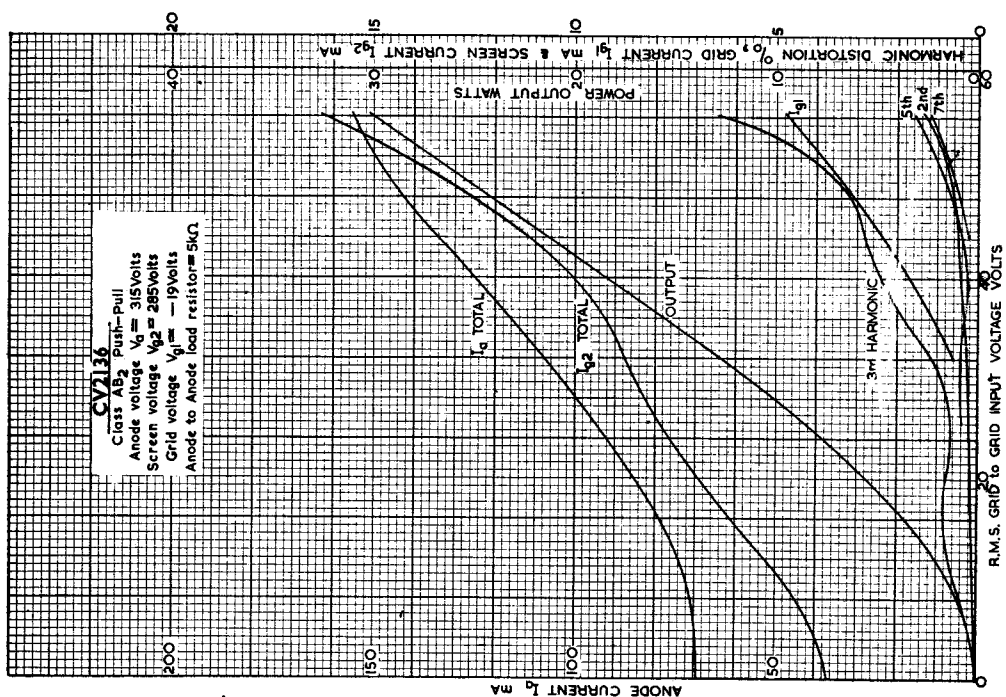
CV2136
Class AB2 Push-Pull
Anode voltage Va = 315Volts
Screen voltage Vg2 = 285Volts
Grid voltage Vg1 = −19Volts
Anode to Anode load resistor=5KΩ
Ia TOTAL
Ig2 TOTAL
OUTPUT
3rd HARMONIC
Ig1
5th
2nd
7th
ANODE CURRENT Ia mA
HARMONIC DISTORTION %, GRID CURRENT Ig1 mA & SCREEN CURRENT Ig2 mA
POWER OUTPUT WATTS
R.M.S. GRID to GRID INPUT VOLTAGE VOLTS

MINISTRY OF SUPPLY - DLRD/RRE

VALVE ELECTRONIC

CV4055

Specification MOS/C V 4055	SECURITY	
Issue 2 Dated 23. Nov. 56.	Specification	Valve
To be read in conjunction with K1001 , BS448 and BS 1409	Unclassified	Unclassified

Indicates a change →

TYPE OF VALVE - Reliable Video Output Pentode

CATHODE - Indirectly-heated

ENVELOPE - Glass

PROT TYPE - CV2127; 6CH6

MARKING

See K1001/4

RATINGS

All limiting values are absolute

			Note
Heater Voltage	(V)	6.3	
Heater Current	(A)	0.75	
Max Anode Voltage (Ig = 0)	(V)	500	
Max Operating Anode Voltage	(V)	3	
Max Screen Grid Voltage (Ig2 = 0)	(V)	500	
Max Operating Screen Voltage	(V)	300	
Max D.C. Cathode Current	(mA)	65	
Max Peak Cathode Current	(A)	1.5	
Max Grid Circuit Resistance	(Kohms)	100	B
Max Bulb Temperature	(°C)	250	C
Max Shock (Short Duration)	(g)	500	
Max Acceleration (continuous operation)	(g)	2.5	
PENTODE CONNECTION			
Max Anode Dissipation	(W)	12	
Max Screen Grid Dissipation	(W)	2.5	
Anode Current	(mA)	40	D
Screen Grid Current	(mA)	6	D
Mutual Conductance	(mA/V)	11	D
Inner Amplification Factor		26	D
TRIODE CONNECTION (g2 to a, g3 to k)			
Max Anode Dissipation	(W)	12.5	
Cathode Current	(mA)	46	D
Mutual Conductance	(mA/V)	13	D
Amplification Factor		26	D

CAPACITANCES (pF) (See Note E)

PENTODE CONNECTION	
Cin (nom)	12.5
Cout (nom)	5.0
Cag1 (max)	0.16
TRIODE CONNECTION	
Cin (nom)	5.0
Cout (nom)	6.0
Cag1 (nom)	6.5

BASE

See BS 448 : B9A/2.1 ←

CONNECTIONS

Pin	Electrode	
1	Internally connected	i/c
2	Control Grid	g1
3	Cathode	k
4	Heater	h
5	Heater	h
6	No connection	n/c
7	Anode	a
8	Screen Grid	g2
9	Suppressor Grid	g3

DIMENSIONS

See BS.448 : B9A/2.1/3

Dimensions (mm)	Min.	Max.
A.Seated height	-	60.3
B.Diameter	19.0	22.2
D.Overall length	-	67.5

MOUNTING POSITION

Any

NOTES

B. This value may be increased to 220k if cathode bias is used.

C. Caution to Electronic Equipment Design Engineers: Special attention should be given to the temperature of valve to be operated in aircraft. Reliability will be seriously impaired if the maximum bulb temperature is exceeded. The life expectancy may be reduced if conditions other than those specified for life test are imposed on the valve and will be reduced appreciably if absolute maximum ratings are exceeded. Both reliability and performance will be jeopardised if heater voltage ratings are exceeded: life and reliability performance are directly related to the degree that regulation of the heater voltage is maintained at its centre-rated value.

CV4055

NOTES (cont'd)

D. Measured at Va = Vg2 = 250V, Vg1 = -4.5V, Vg3 = 0.

E. Measured in a fully screened socket, no external shield.

TESTS

To be performed in addition to those applicable in K1001
and in the specified order unless otherwise agreed with the Inspecting Authority

Test Conditions - unless otherwise specified

Vh (V)	Va (V)	Vg1 (V)	Vg2 (V)	Vg3 (V)
6.3	250	-4.5	250	0

K1001	Test	Test Conditions	AQL %	Insp. level	Symbol	Limits Min.	LAL	Bogey	UAL	Max.	AL	Units
→ 7.1	Glass Strain	No voltages	6.5	I								
	GROUP A											
	Insulation			100%	R							
		Va, all = -300V				100				-		M
		Vg1, all = -100V				100				-		M
		Vg2, all = -300V				100				-		M
	Reverse Grid Current	Rg1 = 100K Max		100%	Ig1	-				1.0		uA
	GROUP B	Combined AQL	1.0	II								
	Heater Current		0.65	II	Ih	0.69	-	0.75	-	0.81		A
	Heater-cathode	Vhk = ±100V	0.65	II	Ihk	-	-	-	-	10		uA
	Leakage Current	Vhk = -100V Cathode positive		V2	Ihk	-	-	-	2	-		uA
	Anode Current		0.65	II	Ia	30	-	-	-	50		mA
				V2	Ia	-	36.3	40	43.7	-	8.2	mA
	Mutual Conductance		0.65	II	gm	9.0	-	-	-	13.5		mA/V
				V2	gm	-	10.26	11.0	11.74	-	1.65	mA/V
	GROUP C	Combined AQL	6.5	I								
	Screen Grid Current		2.5	I	Ig2	-	-	-	-	7.5		mA
				V1	Ig2	-	-	6.0	6.72	-		mA
	Anode Current	Vg1 = -25V	2.5	I	Ia	-	-	-	-	10		uA
	Change in mutual conductance	Vh = 5.7V	2.5	I	Δ gm	-	-	-	-	10		%
	Reverse Grid Current	Vh = 6.9V, Va = 300V Vg2 = 250V, Ia = 40mA Rg1 = 100K Max Note 1	2.5	I	Ig1	-	-	-	-	2.5		uA
11.1	Vibration Noise Output Voltage	Va(b) = 250V RL = 2K Rk = 1.5K Ck = 100 μF	2.5	I	Va AC	-	-	-	-	75		mV rms

CV4055

TESTS (Cont'd)

MOD	Test	Test Conditions	AQL %	Insp. level	Symbol	Limits Min.	LAL	Bogey	UAL	Max.	ALD	Units
	GROUP D											
	Base Strain	No voltages	6.5	IA								
	Capacitance	Measured on a 1 Mc/s bridge with the valve mounted in a fully screened socket No shield	6.5	IC	C in	10.0		12.5		15.0		pF
					C out	4.0		5.0		6.0		pF
					Ca,g1	-		0.145		0.18		pF
	g3 continuity	Vg3 = 250V Note 2	6.5	IA								
	Inner amplification Factor		6.5	IA	ug1,g2	20	-	26	-	32		
	Peak emission	Vg1 = Vg2 = Va = 70V pulsed half sine wave. tp = 10 uSec max prf = 50 pps	6.5	IA	Ik_{pk}	1.5	-	-	-	-	-	A
	GROUP E											
11.2	Resonance Search (1)	Va(b) = 250V;RL = 2K; frequency range: 25 to 500 c/s		IC								
	Vibration Noise Output Voltage	Note 3	2.5		Va AC	-	-	-	-	record		mV rms
	Resonant Frequency		2.5		f	200	-	-	-	-		c/s
11.3	Fatigue	Vh = 6.9V switched 1 min on, 3 mins off Va = Vg2 = 0; Min. pk accel = 5g; Duration = 30, 39, 30 hrs. f = 170 c/s		IA								
	Post Fatigue Tests	Combined AQL.	6.5									
	Heater-cathode Leakage Current	Vhk = ±100V	2.5		Ihk	-	-	-	-	20		uA
	Reverse Grid Current	Rg1 = 100K Max.	2.5		Ig1	-	-	-	-	1.5		uA
	Mutual Conductance		2.5		gm	7.6	-	-	-	-		mA/V
11.1	Vibration Noise Output Voltage	Note 3	2.5		Va AC	-	-	-	-	100		mV rms
11.4	Shock	No voltages Hammer angle = 30°		IA								
	Post Shock Tests	Combined AQL.	6.5									
	Heater-cathode Leakage current	Vhk = ±100V	2.5		Ihk	-	-	-	-	20		uA
	Reverse Grid Current	Rg1 = 100K Max	2.5		Ig1	-	-	-	-	1.5		uA
	Mutual Conductance		2.5		gm	7.6	-	-	-	-		mA/V
11.1	Vibration Noise Output Voltage	Note 3	2.5		Va AC	-	-	-	-	100		mV rms

CV4055

K100	Test	Test Conditions	AQL %	Insp. level	Symbol	Limits Min.	LAL	Bogey	UAL	Max.	ALD	Units
	GROUP F											
AVI/5	Life	Va = 250V Vg2 = 250V Rk = 100 Rg1 = 100K Nom										
AVI/5.1	Stability Life Test											
	Change in Mutual Conductance		1.0	I	Δ gm	-	-	-	-	5	-	%
AVI/5.3	Intermittent Life Test											
	Life Test End-point (500 hours)	Combined AQL	6.5	IA								
AVI/5.6	Inoperatives		2.5									
	Heater Current		2.5		Ih	0.69	-	-	-	0.81		A
	Heater-cathode Leakage Current	Vhk = ±100V	2.5		Ihk	-	-	-	-	15		uA
	Reverse Grid Current	Rg1 = 100K Max	2.5		Ig1	-	-	-	-	1.5		uA
	Mutual Conductance		2.5		gm	8.0	-	-	-	-		mA/V
	Average change in mutual conductance				Δ gm	-	-	-	-	15		%
	Insulation		4.0		R							
		Va, all = -300V				50				-		M
		Vg1,all = -100V				50				-		M
		Vg2,all = -300V				50				-		M
	Life Test End-point (1000 hrs)	Combined AQL	10.0	IA								
	Inoperatives		4.0									
	ELECTRODE INSULATION	Va, all = -300V	6.5		-		R			30	-	-	-
		Vg1,all = -100V					R			30	-	-	-
		Vg2,all = -300V					R			30	-	-	-
AIX/2.5	Electrical re-test after 28-day holding period			100%								
AVI/5.6	Inoperatives		0.5									
	Reverse Grid Current	Rg1 = 100K Max.	0.5		Ig1	-	-	-	-	1.0		uA

NOTES

1 Preheat for 5 minutes under test conditions. During the test, Ig1 shall not be rising nor out of limit after 10 minutes.

2. During this test Ig2 shall rise when g3 is connected to g2.

3. The test conditions for Vibration Noise specified in Group C shall apply.

VALVE ELECTRONIC

CV4058

MINISTRY OF TECHNOLOGY - D.i.R.D./R.&.E.

Specification MIN. TECH./CV4058
Issue 1A Dated May 1967.
be read in conjunction with BS.448, BS.1409 and K.1001

SECURITY	
Specification	Valve
UNCLASSIFIED	UNCLASSIFIED

→ Indicates a change.

TYPE OF VALVE - Reliable Miniature R.F. Power Triode

CATHODE - Indirectly heated

ENVELOPE - Glass

PROTOTYPE - CV133

C.E.T.M.A. - 6100/6C4MA

MARKING
K1001/4

Additional Marking:-
6100/6C4MA

BASE
BS.448/B7G

RATING

			Note
Heater Voltage	(V)	6.3	C
Heater Current	(A)	0.15	
Max. Heater Cathode Voltage	(V)	±150	A
Max. Operating Anode Voltage	(V)	330	A
Max. Anode Voltage (Ia = 0)	(V)	550	A
Max. Anode Dissipation	(W)	3.8	A
Max. Mean Cathode Current	(mA)	21	A
Max. Bulb Temperature	(°C)	170	C
Max. Shock (short duration)	(g)	500	
Max. Acceleration (continuous operation)	(g)	2.5	
Max. Operating Frequency	(Mc/s)	150	
Amplification Factor		17	B
Mutual Conductance	(mA/V)	2.2	B
Anode Impedance	(kΩ)	7.7	B

CAPACITANCE (pF)

C in (nom.)		1.8	D
C out (nom.)		1.3	D
Ca, g (nom.)		1.6	D

CONNECTIONS

Pin	Electrode
1	a
2	I^C
3	h
4	h
5	a
6	g
7	k

DIMENSIONS

See BS.448/B7G/2.1
Size Ref. No. 2

Dimensions (mm)	Min.	Max.
A seated height	-	47.5
C diameter	16.0	19.0
D overall length	-	54.5

MOUNTING POSITION
Any

NOTES

A. Absolute value.

B. Measured at Va = 250V; Vg = -8.5 (Ia = 10.5 mA).

C. Caution to Electronic Equipment Design Engineers: Special attention should be given to the temperature of valves to be operated in aircraft. Reliability will be seriously impaired if the maximum bulb temperature is exceeded. The life expectancy may be reduced if conditions other than those specified for life tests are imposed on the valve and will be reduced appreciably if absolute maximum ratings are exceeded. Both reliability and performance will be jeopardised if heater voltage ratings are exceeded; life and reliability performance are directly related to the degree that regulation of the heater voltage is maintained at its centre-rated value.

D. Measured with valve unscreened.

To be performed in addition to those applicable in K1001

To be performed in the specified order unless otherwise agreed with the Inspecting Authority

Test Conditions - unless otherwise specified

Vh(V)	Va(V)	Vg(V)	Vhk(V)
6.3	250	-6.5	0

K1001 Ref.	Test	Test Conditions	AQL %	Insp. Level	Symbol	Limits						U
						Min.	LAL	Bogey	UAL	Max.	ALD	
7.1	Glass Strain	No voltages	6.5	I								
	GROUP A											
	Electrode Insulation	Vh = 6.3V. Note 1. Vg-all = -100V		100%	R	100	-	-	-	-	-	
		Va-all = -300V		100%	R	100	-	-	-	-	-	
	Reverse Grid Current			100%	Ig	-	-	-	-	0.5	-	
	GROUP B											
		Combined AQL	1.0	II								
	Heater Current		0.65	II	Ih	138	-	150	-	162	-	
5.3	hk Leakage Current	Vhk = ±100V. Note 3	0.65	II	Ihk	-	-	-	-	10	-	
		Vhk = -100V Cathode Positive		V2	Ihk	-	-	-	3	-	-	
	Anode Current		0.65	II	Ia	6.5	-	-	-	14.5	-	
				V2	Ia	-	9.0	10.5	12.0	-	3.5	
	Mutual Conductance		0.65	II	gm	1.75	-	-	-	2.65	-	
				V2	gm	-	2.0	2.2	2.4	-	0.45	
	GROUP C											
		Combined AQL	6.5	I								
	Anode Current	Vg1 = -30V	2.5	I	Ia	-	-	-	-	50	-	
	Reverse Grid Current	Vh = 6.9V. Note 7.	2.5	I	Ig	-	-	-	-	1.0	-	
11.1	Vibration Noise	Va(b) = 250; RL = 2 kΩ Notes 5 and 6.	2.5	I	Va AC	-	-	-	-	7.0	-	
	GROUP D											
7.2	Base Strain	No Voltages.	6.5	IA								
5.9	Capacitances	Measured on 1 Mc/s bridge with valve mounted in a fully shielded holder. No valve screen or holder skirt. Pin 2 link to pin 7.	6.5	IC	C in	1.35	-	1.8	-	2.25	-	
					C out	0.98	-	1.3	-	1.62	-	
					Ca,g	1.2	-	1.6	-	2.0	-	

TESTS (Cont'd)

CV4058

K1001 Ref.	Test	Test Conditions	AQL %	Insp. Level	Symbol	Limits						Units
						Min.	LAL	Bogey	UAL	Max.	ALD	
	Amplification Factor		6.5	IA	μ	15.5	-	-	-	18.5	-	
				VI	μ	-	16.15	17.0	17.85	-	1.9	
	Mutual Conductance	Va = 100V; Vg = 0	6.5	IA	gm	2.25	-	-	-	3.75	-	mA/V
				VI	gm	-	2.60	3.0	3.4	-	0.9	mA/V
	Change of Mutual Conductance	Va = 100V; Vg = 0 Vh = 5.7V. Note 2	6.5	IA	Δ gm		-	-	-	15	-	%
	Power Oscillation	Va(b) = 300V Rg = 8.5 kΩ f = 150 Mc/s. Note 8	4.0	IA	PO	1.8	-	-	-	-	-	W
	GROUP E											
11.2	Resonance Search	Va = 250V RL = 2kΩ Frequency:-	2.5	IC								
		(1) 25-200 c/s			-	-	-	-	-	7	-	mV rms
		(2) 200-500 c/s			-	-	-	-	-	35	-	mV rms
		(3) 500-2500 c/s			-	-	-	-	-	150	-	mV rms
11.3	Fatigue	Note 4. Vh = 6.9V.		I								
	Post Fatigue Tests											
	hk Leakage Current	Vhk = ±100V Note 3	2.5		Ihk	-	-	-	-	20	-	μA
	Reverse Grid Current		2.5		Ig	-	-	-	-	1.0	-	μA
	Mutual Conductance		2.5		gm	1.6	-	-	-	2.65	-	mA/V
11.1	Vibration Noise	As in Group C	2.5		Va AC	-	-	-	-	15	-	mV rms
11.4	Shock	Hammer Angle = 30° No voltages.		IA								
	Post Shock Tests											
5.3	hk Leakage Current	Vhk = ±100V Note 3	2.5		Ihk	-	-	-	-	20	-	μA
	Reverse Grid Current		2.5		Ig	-	-	-	-	1.0	-	μA
	Mutual Conductance		2.5		gm	1.6	-	-	-	2.65	-	mA/V
11.1	Vibration Noise	As in Group C	2.5		Va AC	-	-	-	-	15	-	mV rms
	GROUP F											
A VI	Life	Vhk = 150V D.C. Heater positive Note 9.										
A VI/5.1	Stability Life (1 hour)											
	Change in Mutual Conductance		1.0	I	Δ gm	-	-	-	-	10	-	%
A VI/5.2	Survival Rate Life (100 hours)											
5.6	Inoperatives		0.65	II								

K1001 Ref.	Test	Test Conditions	AQL %	Insp. Level	Symbol	Limits						Units
						Min.	LAL	Bogey	UAL	Max.	ALD	
	Intermittent Life											
	Test Point 500 hrs.	Combined AQL	6.5	IA								
A VI/5.6	Inoperatives		2.5									
	Heater Current		2.5		Ih	138	-	-	-	162	-	mA
5.3	hk Leakage Current	Vhk = +100V. NOTE 3	2.5		Ihk	-	-	-	-	20	-	µA
	Reverse Grid Current		2.5		Ig	-	-	-	-	0.5	-	µA
	Mutual Conductance		2.5		gm	1.6	-	-	-	2.65	-	mA/V
	Average Change in Mutual Conductance				Δ gm	-	-	-	-	15	-	
	Anode Current		4.0		Ia	5.5	-	-	-	14.5	-	mA
	Electrode Insulation	Vh = 6.3V. Note 1. Vg -all = -100V Va -all = -300V	4.0		 R R	 50 50	 - -	 - -	 - -	 - -	 - -	 MΩ MΩ
	Test Point 1000 hrs.	Combined AQL	10									
A VI/5.6	Inoperatives		4.0									
5.3	hk Leakage Current	Vhk = ±100V. Note 3	4.0		Ihk	-	-	-	-	20	-	µA
	Reverse Grid Current		4.0		Ig	-	-	-	-	0.5	-	µA
	Mutual Conductance		4.0		gm	1.5	-	-	-	2.65	-	mA/V
	Anode Current		6.5		Ia	5.0	-	-	-	14.5	-	mA
	Electrode Insulation	Vh = 6.3V. Note 1 Vg -all = -100V Va -all = -300V			 R R	 30 30	 - -	 - -	 - -	 - -	 - -	
	GROUP C											
A IX/2.5	Electrical Re-test after 28 days holding period			100%								
A VI/5.6	Inoperatives		0.5									
	Reverse Grid Current		0.5		Ig	-	-	-	-	0.5	-	µA

CV4058

NOTES

1. Heater and cathode strapped and considered as a single electrode.

2. Change of mutual conductance is expressed:

$$\frac{(g_m \text{ at } 6.3V) - (g_m \text{ at } 5.7V)}{(g_m \text{ at } 6.3V)} \times 100\%$$

3. Heater positive and negative successively.

4. Valves shall be vibrated in each of the three required planes for not less than 30 hours and not less than 100 hours total. Heater switched 1 minute on 3 minutes off. No other voltages. Minimum peak acceleration = 5g; frequency = 170 ±5 c/s.

5. (valve shall be mounted so that the direction of vibration is parallel to the minor axis of the mounting ucture.
Vibration frequency = any fixed frequency in the range 25-100 c/s.
Minimum peak acceleration = 2g.
The test shall be of sufficient duration to obtain a steady reading of noise output.

6. Alternatively Va(b) = 250V; RL = 2kΩ; Vg = 0; Rk = 810Ω; Ck = 1000 μF.

7. Prior to this test the valve shall be pre-heated for 5 minutes under the test conditions. Ig shall not be rising or out of limit after 10 minutes.
Alternative test conditions: Va(b) = 250V; Vg = 0; Rk = 810Ω may be used for this test.

8. An average valve shall be set to give Ia = 25mA by adjusting the lead/tank circuit coupling while the load is simultaneously tuned to give maximum power output.

9. Life test conditions. Va = 250V; Vg adjust so that the anode dissipation is 3.45 watts ± 10%.
Cathode Bias may be used .

VALVE ELECTRONIC

ADMIRALTY SIGNAL AND RADAR ESTABLISHMENT

C.V.4060.

Specification AD/CV4060 Issue No. 2 dated 12.10.56. To be read in conjunction with K1001, B.S.448 and B.S.1409.	SECURITY	
	Specification	Valve
	Unclassified	Unclassified

→ Indicates a change

TYPE OF VALVE:- Reliable Beam Tetrode, (for series regulator applications)

CATHODE:- Indirectly heated.

ENVELOPE: Glass

PROTOTYPE:- VX6114

MARKING
See K1001/4

BASE
B.S.448/B8 - 0

RATINGS All limiting values are absolute			Note
Heater Voltage	(V)	6.3	
Heater Current	(A)	1.6	
→ Max. Peak Anode Voltage	(V)	1500	A
Max. Anode Voltage	(V)	800	
Max. Screen Voltage	(V)	300	
Max. Control Grid Voltage	(V)	100	
Max. Anode Dissipation	(W)	28	
Max. Screen Dissipation	(W)	5	
Max. Heater-Cathode Voltage -			
(a) Cathode positive	(V)	350	
(b) Cathode negative	(V)	150	
Max. Cathode Current	(mA)	300	
Max. Resistance g^1 to Cathode -			
(a) Fixed bias	(k ohms)	100	
(b) Cathode follower	(M ohms)	1	
→ Max. Acceleration (continuous operation)	(g)	2.0	
Max. Shock (Short duration)	(g)	500	
Anode Current	(mA)	200	C
Screen Current	(mA)	12	C
Mutual Conductance	(mA/V)	12.5	C
Inner/u		5.2	

CONNECTIONS	
Pin	Electrode
1	IC
2	h
3	a
4	g^2
5	g^1
6	bp
7	h
8	k

DIMENSIONS

See drawing on page 4.

CAPACITANCES (pF)	
Ca, g1	1.8
C in	19.5
C out	16.5

MOUNTING POSITION

Any

NOTES

A. This voltage may be applied in pulses not exceeding 200 uS, the duty cycle being less than 10%.
B. Pin 6 must be connected to cathode.
C. Measured at Va=Vg2= 150V, Vg1= -8.5

C.V.4060.

TESTS

To be performed in addition to those applicable in K1001, and in the specified order unless otherwise agreed with the Inspecting Authority.

Test conditions unless otherwise stated.

Vh (V)	Va (V)	Vg2 (V)	Ia (mA)
6.3	150	150	200

K1001	Test	Test Condition	AQL %	Insp. Level	Symbol	Limits Min.	Limits Max.	Units
→ 7.1	Glass strain	No voltages	6.5	1				
	GROUP A							
→ 11.1	Noise and Microphony.	Frequency =50c/s Accel: =2g Va(b)=200V, Vg2= 100V, RL = 1.2 kΩ Ia = 100 mA		100%	Va (AC)	-	450	mV(rms)
5.2	Insulation.	Vg1-all= -100V Vg2-all= -500V Va-all = -500V No other voltages		100%	R	60 100 100	- - -	M ohms M ohms M ohms
	Reverse Grid Current.	Vg1= -60V		100%	Ig1	-	4.0	µA
	Reverse Grid Current.			100%	Ig1	-	2.0	µA
	GROUP B	Combined AQL	1.0					
	Heater Current.		0.65	II	Ih	1.4A ~~1.5~~	1.8	A
	Heater Cathode Leakage.	Vhk=350V (k+ve) Vhk=150V (k-ve) R lim. = 1 Megohm Max.	0.65	II	Ihk	-	40	µA
	Negative Grid Voltage.		0.65	II	Vg1	6.5	13.0	V
	Anode Current Rise.	Vg1 changed by 6V	0.65	II	Ia	70	95	mA
	Screen Current.	Va= 50V	0.65	II	Ig^2	-	40	mA
	Anode Current.	Va=Vg2=100V Vg1=0	0.65	II	Ia	164	-	mA
	GROUP C	Combined AQL	6.5					
	Anode Current Tail.	Vg1= -60V	2.5	II	Ia	-	5.0	mA
	Screen Current.		2.5	II	Ig2	-	19.5	mA
	Change in Vg2.	Reduce Vg1 by 6V Change Vg2 to maintain Ia=200mA	2.5	II	Vg2	27	43	V

TESTS (Contd.)

C.V4060.

K1001	Test	Test Conditions	AQL %	Insp. Level	Symbol	Limits Min.	Limits Max.	Units
	GROUP D							
11.2	Resonance Search	Frequency Range = 25 to 500 c/s Accel: 2g min. Va(b) = 200V, Vg2 = 100V RL = 1.2 kΩ Ia = 100 mA Circuit as for noise and microphony.	2.5	IC	Va (AC)	-	300	mV(rms) ←
11.3	Fatigue	Frequency 170 c/s Accel: 2.0g min. Duration 100 hrs. divided in 30,30, 39 hrs. Vh 6.9V switched 1 min. on 3 mins. off.		IA				←
	Post Fatigue Tests							
	Noise and Microphony.	Frequency 50 c/s Accel: 2g min. Va(b) = 200V, Vg2 = 100V RL = 1.2 kΩ Ia = 100 mA	6.5		Va (AC)	-	1500	mV(rms) ←
	Heater Cathode Leakage.	Vhk= 350V (k+ve)	2.5		Ihk	-	80	µA
	Reverse Grid Current.		2.5		Ig1	-	4.0	µA
	Screen Current		2.5		Ig2	-	19.5	mA
11.4	Shock	Hammer angle 30° 5 shocks in each of four directions		IA	~~IA~~			
	Post Shock Tests		6.5				1500	
	Noise and Microphony.	Frequency= 50 c/s Accel: 2g min. Va(b) = 200V, Vg2 = 100V RL = 1.2 kΩ Ia = 100 mA	~~2.5~~		Va (AC)	-	~~300~~	mV(rms) ←
	Heater-Cathode Leakage	Vhk=350V (k + ve)	2.5		Ihk	-	80	µA
	Reverse Grid Current.		2.5		Ig1	-	4.0	µA
	Screen Current.		2.5			-	19.5	mA
	GROUP E							
A.IV/ 2.5	Electrical re-test after 28 days holding period.				100%			
A.V/ 5.6	Inoperatives		0.5					
	Reverse Grid Current		0.5		Ig1	-	3.0	µA ←

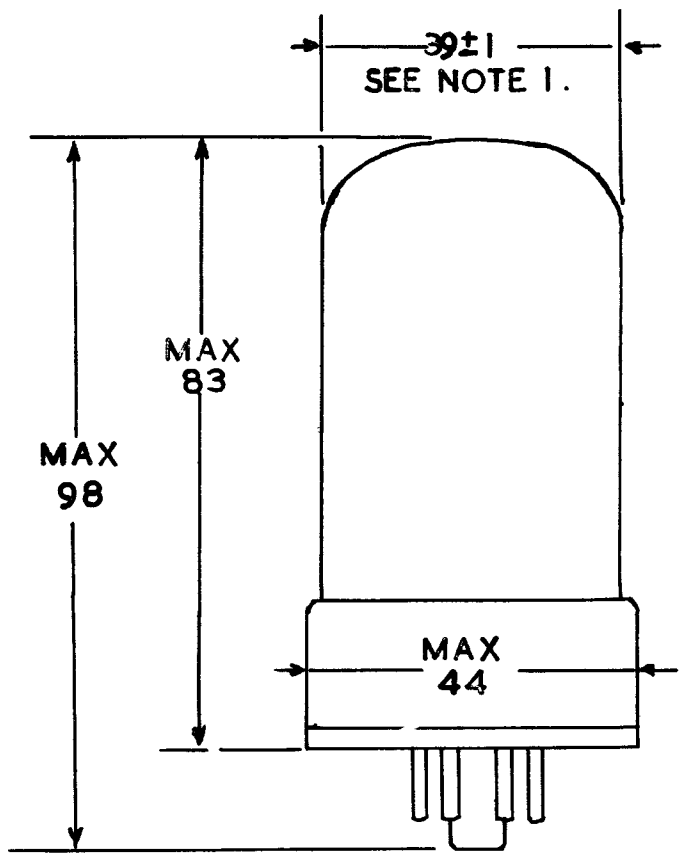

1. THESE TOLERANCES TO INCLUDE VARIATIONS DUE TO OVALITY AND TAPER.

2. A PARALLEL SIDED BULB IS MANDATORY.

ALL DIMENSIONS ARE IN MILLIMETERS.

MINISTRY OF SUPPLY :- DLAD/RNE.

VALVE ELECTRONIC **CV 4062**

Specification MOS/CV4062 Issue 2, Dated 23 Nov. 1956 To be read in conjuction with K1001 , BS448 and BS1409	SECURITY Specification: UNCLASSIFIED Valve: UNCLASSIFIED

Indicates a change ⟶

TYPE OF VALVE - Reliable Low Impedance Pentode

CATHODE - Indirectly-heated

ENVELOPE - Glass

PROTOTYPE - CV2179

MARKING

See K 1001/4.

BASE

See BS 448: B7G/1.1

RATING

All limiting values are absolute.

			Note
Heater Voltage	(V)	6.3	
Heater Current	(A)	0.64	
Max. Anode Voltage	(V)	300	
Max. No-load Anode Voltage	(V)	500	
Max. Anode Dissipation	(W)	9	
Max. Screen Voltage	(V)	300	
Max. Screen Dissipation	(W)	3	
Max. Heater - Cathode Voltage	(V)	250	
Pentode Connection (Note B)			
Mutual Conductance	(mA/V)	9.5	
Amplification Factor		220	
Anode Impedance	(ohms)	23000	
Triode Connection (Note C)			
Mutual Conductance	(mA/V)	12	
Amplification Factor		10	
Anode Impedance	(ohms)	835	
Max. Bulb Temperature	(°C)	200	D
Max. Altitude for full rating	(ft)	10000	D
Max. Shock (short duration)	(g)	500	D
Max. Acceleration (continuous vibration)	(g)	2.5	D

CONNECTIONS

Pin	Electrode	
1	Control grid	g1
2	Cathode & Suppressor	k + g3
3	Heater	h
4	Heater	h
5	Anode	a
6	Internally connected	i/c
7	screen grid	g2

Dimensions
See BS 448/B7G2.1.
Size Ref. No. 5

Dimensions (ins)	Min.	Max.
A seated height	-	63.5
B diameter	16	19
D overall length	-	70.5

CAPACITANCES (pF)

Cag1 (nom.)	0.45
Cgle (nom.)	11.0
Cae (nom.)	8.5

MOUNTING POSITION

Any

NOTES

B. Measured at Va = 165V: Vg2 = 165V; Ia = 55mA

C. Measured at Va = Vg2 = 165V; Ia = 63mA

D. Caution to Electronic Equipment Design Engineers: Special attention should be given to the temperature of valves to be operated in airdraft. Reliability will be seriously impaired if the maximum bulb temperature is exceeded. The life expectancy may be reduced if conditions other than those specified for life test are imposed on the valve and will be reduced appreciably if absolute maximum ratings are exceeded. Both reliability and performance will be jeopardised if heater voltage ratings are exceeded: life and reliability performance are directly related to the degree that regulation of the heater voltage is maintained at its centre-rated value.

CV4062

TESTS

To be performed in addition to those applicable in K1001

Tests shall be performed in the specified order unless otherwise agreed with the Inspecting Authority.

Test Conditions unless otherwise specified

Vh(V)	Va(V)	Vg2(V)	Ia(mA)
6.3	165	165	55

K1001	Test	Test Conditions	AQL %	Insp. Level	Symbol	LIMITS Min	LAL	Bogey	UAL	Max	ALD	Units
7.1	Glass Strain	No Voltages	6.5	1								
	GROUP A											
	Insulation	Vg_1 -all = -100V		100%	R	100	-	-	-	-		M
		Vg_2 -all = -300V		100%	R	100	-	-	-	-		M
		Va -all = -300V		100%	R	100	-	-	-	-		M
	Reverse Grid Current	Rg1 = 500k Max		100%	Ig1	-	-	-	-	1.5		µA
	GROUP B	Combined AQL	1.0									
	Heater Current		0.65	II	Ih	0.58	-	0.64	-	0.70		A
	H-C Leakage Current	Vhk = 250V cathode positive	0.65	II	Ihk	-	-	-	-	50		µA
				V2	Ihk	-	-	-	10.0	-		µA
	Negative Grid Voltage (1)		0.65	II	Vg1	6	-	-	-	12		V
				V2	- -	-	7.5	9	10.5	-	3.33	V
	Screen Current		0.65	II	Ig2	7	-	-	-	11		mA
	Mutual Conductance		0.65	II	gm	7	-	-	-	12		mA/V
				V2	gm	-	8.25	9.5	10.75	-	2.78	mA/V
	GROUP C	Combined AQL	6.5									
	Negative Grid Voltage (2)	Ia = 30 µA	2.5	I	Vg1	-	-	-	-	40		V
	Emission	Ia = 120mA Anode + g1 + g2 Strapped	2.5	I	Va	-	-	-	-	20		V
	Vibration Noise	Va(b) = 250 V; Rl = 2k Rg1 = Rg2 = 10k Rk = 470, Ck = 200 uF	2.5	I	VaAC	-	-	-	-	75		mV RMS
	Amplification Factor	Note 1	2.5	I	µ	7.5	-	-	-	12.5		
	GROUP D											
7.2	Base Strain		6.5	IA								
	Capacitances	Measured on 1Mc/s bridge with the valve mounted in a fully screened socket. No shield.	6.5	IC	Cag1	-	-	0.45	-	0.6		pF
					Cgs	10	-	11	-	12		"
					Cas	7.5	-	8.5	-	9.5		"

TESTS (Cont'd)

CV4062

K1001	Test	Test Conditions	AQL %	Insp Level	Symbol	LIMITS Min	LAL	Bogey	UAL	Max	ALD	Units
	GROUP E											
11.2	Resonance Search	RL = 2.2K Frequency = 25-500 c/s	2.5	IC	Va(AC) f	- 200	-	-	-	record. -		mV RMS c/s
11.3	Fatigue	Vh = 6.9V switched 1 min. on 3 mins. off Va = Vg2 = 0 Acceleration = 5g Duration = 30, 39, 30 hrs Frequency = 1700/s		IA								
	Post Fatigue Tests	Combined AQL	6.5									
	H-C Leakage Current	Vhk = 250V	2.5		Ihk	-	-	-	-	100		µA
	Reverse Grid Current	Rg1 = 500K max	2.5		Ig1	-	-	-	-	2.5		µA
	Mutual Conductance		2.5		gm	6.5	-	-	-	-		mA/V
	Vibration Noise	Note 2	2.5		Va (AC)	-	-	-	-	100		mV RMS
11.4	Shock	Hammer angle = 30° No voltages		IA								
	Post Shock Tests	Combined AQL	6.5									
	H-C Leakage Current	Vhk = 250V	2.5		Ihk	-	-	-	-	100		µA
	Reverse Grid Current	Rg1 = 500 k max	2.5		Ig1	-	-	-	-	2.5		µA
	Mutual Conductance		2.5		gm	6.5	-	-	-	-		mA/V
	Vibration Noise	Note 2	2.5		Va (AC)	-	-	-	-	100		mV RMS
	GROUP F											
AV1/5	Life	Va = 165V Ia = 55mA Vg2 = 165V Vhk = 200V AC										
AV1/5.1	Stability Life Test Change in Mutual Conductance		1.0	I	gm	-	-	-	-	10		%
AV1/5.3	Intermittent Life Test			IA								
	Life Test End-point (500 hours)	Combined AQL	6.5									
	Inoperatives		2.5									
	Heater Current		2.5		Ih	0.58	-	-	-	0.7		A
	H-C Leakage Current	Vhk = 250V	2.5		Ihk	-	-	-	-	75		µA
	Reverse Grid Current	Rg1 = 500 k max	2.5		Ig1	-	-	-	-	2		µA
	Mutual Conductance		2.5		gm	6.5	-	-	-	12		mA/V
	do Average change				gm	-	-	-	-	15		%
	Negative Grid Voltage		4.0		Vg1	5.5	-	-	-	12		V
	Electrode Insulation	See Group A	4.0		R	50	-	-	-	-		M
	Life Test End-point (1000 hours)	Combined AQL	10									
	Inoperatives		4.0									
	Heater Current		4.0		Ih	0.58	-	-	-	0.7		A
	H-C Leakage Current	Vhk = 250V	4.0		Ihk	-	-	-	-	100		µA
	Reverse Grid Current	Rg 1 = 500 k max	4.0		Ig1	-	-	-	-	2.5		µA
	Mutual Conductance		4.0		gm	6.0	-	-	-	12		mA/V
	Negative Grid Voltage		6.5		Vg1	5.0	-	-	-	12		V

MIL-STD-105	Test	Test Conditions	AQL %	Insp. Level	Symbol	LIMITS Min.	LAL	Bogey	UAL	Max.	Ald	Units
	GROUP C											
AIX/ 2.5	Re-test after 28 days holding period											
AVI/ 5.6	Inoperatives		0.5	100%								
	Reverse Grid Current	Rg1 = 500K Max	0.5	100%	Ig1	-	-	-	-	2.5		µA

NOTES

1. Measured with anode and screen grid connected together.

$$Va + Vg2 = 165V$$

$$Ic = 65mA$$

2. The test conditions for the Vibration Noise test in Group C shall apply.

MINISTRY OF SUPPLY - DLRD(A)/RRE VALVE ELECTRONIC **CV4079**

Specification MOS(A)/CV 4079 Issue 1. Dated 1st May, 1958 To be read in conjunction with K.1001 and BS 448	SECURITY	
	Specification	Valve
	UNCLASSIFIED	UNCLASSIFIED

TYPE OF VALVE - Reliable Low Impedance Triode CATHODE - Indirectly-heated ENVELOPE - Glass PROTOTYPE - VX 3208 EQUIVALENT FLEXIBLE LEAD VALVE - CV 4038	MARKING K.1001/4 BASE B9A DIMENSIONS See K1001 A1/D4

Dimension (mm)	Min.	Max.
L. Seated height	-	66
B. Diameter	19	22.2
A. Overall length	-	73

MOUNTING POSITION

Any

RATING, CONNECTIONS, CAPACITANCES and NOTES

See Specification MOS(A)/CV 4038, Issue 3, dated 6.11.56.

TESTS

The tests required by Specification MOS(A)/CV 4038, Issue 3, dated 6.11.56. shall be performed except as follows:-

K1001	Test	Test Conditions	AQL %	Insp. Level	Symbol	Limits	Units
	GROUP D						
	DELETE -						
5.12	Lead Fragility	No voltages	6.5	IA			
	ADD -						
7.2	Base Strain	No voltages	6.5	IA			

Z.16876.R.

ADMIRALTY SIGNAL & RADAR ESTABLISHMENT

VALVE ELECTRONIC

CV4080

Specification AD/CV4080

Issue No. 1 dated 5.11.58

To be read in conjunction with K1001, B.S.448 and B.S.1409.

SECURITY	
Specification Unclassified	Valve Unclassified

TYPE OF VALVE: Reliable Gas-Filled Voltage Stabiliser.

CATHODE: Cold

ENVELOPE: Glass, unmetallised.

PROTOTYPE: 75C1

MARKING

See K1001/4

BASE

See B.S.448/B7G

RATINGS

(All limiting values are absolute.)

			Note
Max. Striking Voltage	(V)	110	A
Nominal Maintaining Voltage	(V)	78	B
Max. Anode Current	(mA)	60	
Min. Anode Current	(mA)	2	
Max. Voltage Regulation over range 2-60 mA.	(V)	8	
Max. Acceleration (continuous operation)	(g)	2.5	
Max. Shock (short duration)	(g)	500	

CONNECTIONS

Pin	Electrode
1	a
2	k
3	IC
4	k
5	a
6	IC
7	k

DIMENSIONS

See B.S.448/B7G/2.1 Size Ref. No. 2.

Dimension	Min.	Max.	
A mm.	-	54.5	overall length
B mm.	-	19.0	Diameter
L mm.	-	47.5	Seated height

MOUNTING POSITION

Any.

NOTES

A. Measured either in total darkness or in normal ambient light.

B. Measured at 30 mA.

C. To maintain the stability of the valve characteristics a reverse current must not be drawn. This condition is satisfied provided the negative anode voltage does not exceed 70 volts.

TESTS

To be performed in addition to those applicable in K1001. Tests are to be performed in the specified order unless otherwise agreed with the Inspecting Authority.

Test Conditions - unless otherwise stated:

Va (V)	R lim. (ohms)	Ia (mA)
Adjusted Note (i)	1000	30 Note (ii)

Note (i) A Direct Voltage, not exceeding 50V shall be applied between anode and cathode and shall be increased steadily at a rate not exceeding 10V per second until the valve strikes. The ripple content of the supply shall not exceed 0.25%.

Note (ii) After the valve has struck, the supply voltage shall be adjusted until the anode current is 30 mA. It shall be maintained constant for 3 minutes before any characteristic, other than striking voltage, is measured.

K1001 Ref.	Test	Test Conditions	AQL %	Insp. Level	Symbol	Limits Min.	Limits Max.	Unit
7.1	Glass Strain	No Voltages	6.5	I				
	GROUP A							
	Striking Voltage	Note 1		100%	Vs	-	110	V
	Maintaining Voltage			100%	Vm	75	81	V
	Regulation	Ia changed from 2 to 60 mA Note 2.		100%	Vr	-	8	V
	Voltage Jumps	Vary Ia from 2 to 10 mA		100%			300	mV/p/p
		10 to 60 mA Notes 3, 4.					100	mV/p/p
	Oscillation	Vary Ia from 2 to 60 mA Notes 3, 4.		100%	Va A.C.		20	mV/p/p
	GROUP B	Combined AQL	6.5					
	Striking Voltage	Note 6	2.5	I	Vs	-	110	V
	Leakage Current	V supply = 55V Ra = 1 Megohm	2.5	I	Ia	-	10	/uA
	Microphony	Note 5.	2.5	I	-	-	5	mV/p/p
	GROUP C							
7.2	Base Strain	No Voltages	6.5	IA				
	GROUP D							
11.2	Resonance Search	Ra = 27 k ohm Ia = 10 mA Frequency = 25-500 c/s Acceleration = 2 g Note 3		T.A.				
	Vibration Noise	Frequency = 25-500 c/s	2.5	IA	V ac		5	mV r.m.s.

K1001 Ref.	Test	Test Conditions	AQL %	Insp. Level	Symbol	Limits Min.	Limits Max.	Unit
	GROUP E	Combined AQL	6.5					
11.3	Fatigue Test	No Voltages Acceleration = 5g Frequency = 170 c/s ± 5 c/s Duration = 30 + 30 + 39 hrs.		IA				
	Post Fatigue Tests	Combined AQL	6.5					
	Striking Voltage	Note 1.	2.5		Vs	-	110	V
	Change in Maintaining Voltage		2.5		Δ Vm		±1.0	V
	Microphony	Note 5.	2.5				10	mV/p/p
11.4	Shock Test	No Voltages Acceleration 500 g (Hammer Angle 30°)		IA				
	Post Shock Tests	Combined AQL	6.5					
	Striking Voltage	Note 1.	2.5		Vs	-	110	V
	Change in Maintaining Voltage		2.5		Δ Vm		±1.0	V
	Microphony	Note 5.	2.5				10	mV/p/p
	GROUP F							
	Life Test End Point 500 hours	Combined AQL	6.5	IA				
	Inoperatives		2.5					
	Striking Voltage	Note 1.	2.5		Vs	-	110	V
	Maintaining Voltage	Vm 0-500 hours	2.5		Δ Vm		±1.5	V
	Regulation	Ia changed from 2-60 mA	2.5		Vr		8	V
	GROUP G							
A IX 2.5	Re test after Holding Period of 28 days			100%				
	Inoperatives		0.5					
	Striking Voltage	Note 1.	0.5		Vs	-	110	V
	Maintaining Voltage		0.5		Vm	75	81	V

NOTES

1. This test is to be conducted in normal ambient room lighting, 5 to 50 foot candles.

2. This is the difference between maintaining voltages at the maximum and minimum current specified.

3. A calibrated amplifier detector with CRT indicator having a substantially linear response over the range 50-5000 c/s is to be connected between anode and cathode.

4. The anode current is to be varied through the full-rated current range in not less than 1 second. Where an indicator with a persistence of less than 1 second is used, this test shall be performed at least three times, but if an indicator with a persistence of 1 second or more is used, one sweep is sufficient.

5. The valve shall be tested in an approved tapper, details of which can be obtained from the specifying authority.

6. The test is to be conducted in total darkness after the valves have been held in total darkness for 24 hours.

VALVE ELECTRONIC CV4082

Specification MOA/CV4082

Issue 1B dated 27th April, 1965

To be read in conjunction with K1001
B.S.448 and B.S.1409

SECURITY	
Specification	Valve
Unclassified	Unclassified

→ indicates change

TYPE OF VALVE - Pulse modulator tetrode

CATHODE - Indirectly heated

ENVELOPE - Glass

PROTOTYPE - CV2231, VX3517

MARKING

See K1001/4

BASE

B.S.448/B8-0/1.1

RATINGS AND CHARACTERISTICS

(Absolute, non-simultaneous and not for Inspection purposes)

			Note
Heater Voltage	(V)	6.3	
Heater Current	(A)	1.32	
Max.Anode Voltage (DC)	(KV)	6.0	
Max.Anode Voltage (Pulse)	(KV)	8.0	
Max.Screen Voltage (DC)	(V)	800	
Max.Anode Dissipation	(W)	15	
Max.Screen Dissipation	(W)	3.5	
Max.Cathode Current Pulse)	(A)	10.0	
Max.Cathode Current (DC)	(mA)	120	
Max. Anode current (Pulse)	(A)	7.5	
Max.peak heater cathode voltage	(V)	± 150	
Max.Grid 1/Cathode voltage	(V)	± 200	
Max.Grid 1 dissipation	(W)	0.5	
Max.Bulb Temperature	(C)	240	A
Inner Amplification Factor	u(g1-g2)	7.5	
Max.Shock (short duration)	(g)	500	
Max.Accn. (continuous)	(g)	2.5	

CAPACITANCES (pF) (note B)

Ca, g1	(nom)	pF	0.75
C in	(nom)	pF	14.0
C out	(Nom)	pF	8.5

CONNECTIONS

Pin	Electrode	
1	Int.Conn.	IC
2	Heater	h
3	Int.Conn.	IC
4	Screen Grid	g2
5	Control Grid	g1
6	Int.Conn.	IC
7	Heater	h
8	Cathode and base shell	kS
T.C.	Anode	a

DIMENSIONS

See K1001/A1/D1

Dimension (mm)	Min.	Max.
B Diameter	-	34
A Overall Length	-	100
L Seated Length	-	85

TOP CAP

B.S.448/CT1

MOUNTING POSITION

Any

NOTES

A. The temperature over the top 15 mm of the bulb to be not greater than 150°C.

B. Measured on 1Mc/s bridge in fully screened holder. No shield. All I.C. connections left floating.

To be performed in addition to those applicable in K1001 and in the specified order unless otherwise agreed with the Inspecting Authority.

TEST CONDITIONS - unless otherwise stated

Vh(V)	Va(V)	Vg2(V)	Ia(mA)
6.3	150	150	50

K1001	TEST	TEST CONDITIONS	AQL %	Insp. Level	Symbol	LIMITS Min.	LIMITS Bogey	LIMITS Max.	UNITS
7.1	Glass Strain	No Voltages	6.5	I					
	GROUP A								
5.2	Insulation	Vg1-all = -100V		100%	R	100	-	-	M
		Vg2-111 = -300V			R	100	-	-	M
	Negative Grid Current	Rg1 = 500k max.		100%	Ig1	-	-	2.5	µA
	Peak Anode Current	Va = 7kV Vg2 = 600V Vg1 = -160V Note 1		100%	Ia. pk	2.0	-	-	A
	GROUP B	Overall AQL	2.5						
	Heater Current		0.65	II	Ih	1.17	-	1.47	A
	Heater-Cathode Leakage Current	Vhk = ± 100V	0.65	II	Ihk	-	-	40	µA
	Negative Grid Voltage		0.65	II	Vg1	10.5	-	16.5	V
	Screen Current		0.65	II	Ig2	-	-	9.0	mA
	Mutual Conductance		0.65	II	gm	6.0	-	10.0	mA/V
	GROUP C	Overall AQL	6.5						
	Amplification Factor		2.5	I	µg1-g2	6.0	-	10.0	
	Anode Current	Vg1 = -30V	2.5	I	Ia	-	-	600	µA
	High Voltage Tail Test	Va = 7kV Vg2 = 150V Vg1 = -80V	2.5	I	Ia	-	-	300	µA
	Vibration Noise	Note 4	2.5	I	VaAC	-	-	75	mV
	Emission	A + g2 + g1 strapped Va pk = 250V. Note 2	2.5	I	Iapk	7.5	-	-	A

K1001	TEST	TEST CONDITIONS	AQL %	Insp. Level	Sym-bol	Limits Min	Limits Bogey	Limits Max	Units
	GROUP D								
	Capacitance	Measured on 1 Mc/s bridge with valve in fully screened holder No shield. Note 6.	6.5	IC	Cag 1 C in C out	0.55 12.5 7.0	0.75 14.0 8.5	0.95 15.5 10.0	pF pF pF
	GROUP E								
11.3	Fatigue	Vh = 6.9V Note 3		IA					
	Post Fatigue Tests	Combined AQL ------	6.5						
	Heater-Cathode Leakage Current	Vhk = ± 100V	2.5		Ihk	-	-	100	µA
	Negative Grid Current Mutual Conductance	Rg1 = 500k max.	2.5		Ig1	-	-	3	µA
	Vibration Noise	Note 4	2.5		gm	6.0	-	10	mA/V
	Peak Anode Current	As in Group 4	2.5		Va AC	-	-	120	mVrms
					Ia pk	1.5	-	-	A
11.4	Shock	No Voltages Hammer Angle = 30°		IA					
	Post Shock Tests	Combined AQL -----	6.5						
	Heater-Cathode Leakage Current	Vhk = ± 100V			Ihk	-	-	100	µA
	Negative Grid Current Mutual Conductance	Rg1 = 500k max.	2.5		Ig1	-	-	3	µA
	Vibration Noise	Note 4	2.5		gm	6.0	-	10	mA/V
	Peak Anode Current	As in Group A	2.5		Va AC	-	-	120	mVrms
					Ia pk	1.5	-	-	A
	GROUP F								
AV1/5	Life	Va = 6kV Vg2 = 600V Vg1 = -160V Vhk = 240V AC IK pk = 3A approx Pulse length = 2 µS. Prf = 1000 c/s Positive g1 excursion = 50V Note 5							
AV1/5.1	Stability Life Test Change in mutual conductance		1.0	I	gm	-	-	15	%
AV1/5.3	Intermittent Life Test			IA					

K1001	TEST	TEST CONDITION	AQL %	Insp. Level	Symbol	LIMITS Min	LIMITS Bogey	LIMITS Max.	UNITS
	GROUP F								
	Life Test end point (500 hrs)								
	Inoperatives		2.5						
	Heater current		6.5		Ih	1.17	-	1.47	A
	Heater-Cathode Leakage Current	Vhk = ± 100V	6.5		Ihk	-	-	60	- μA
	Reverse Grid Current	Rg1 = 500k max	6.5		Ig1	-	-	3	- μA
	Mutual Conductance		6.5		gm	5.5	-	10	mA/V
	Peak Anode Current	Va = 7Kv Vg2 = 600V Vg1 = -160V NOTE 1	6.5		Ia_{pk}	1.5			
	Electrode Insulation	See Group A	6.5		R	50	-	-	M
	GROUP G								
A IX /2.5	Electrical re-test after 28-day holding period								
A VI /5.6	Inoperatives		0.5	100%					
	Reverse grid current	Rg1 = 500K max.	0.5	100%	Ig1	-	-	2.5	μA

NOTES

1. Valve to be driven with 2μ second pulse at p.r.f. 1000 c.p.s. so that the grid voltage rises to 50V positive, (max) during pulse R.L. to be 2,200 ohms ± 5%.

The load circuit should include some ~~source~~ SERIES inductance which together with the circuit damping should be chosen so that the peak pulse E.H.T. overshoot is equal to half the load pulse voltage. The E.H.T. storage capacity, fed from a high impedance supply should be 0.05 μF. Duration of test, 2 minutes. During the second minute the valve shall be ~~possibly~~ free from flashing as shown by disturbance of the current waveform displayed on an oscilloscope.

GIVING A SHORT CIRCUIT CURRENT NOT GREATER THAN 4.0MA

2. Tp 2 μsecs p.r.f. 50 c/s.

3. Valves to be vibrated in each of the three required planes for not less than 30 hrs. and not less than 100 hrs. total. Heater switched 1 min. on 3 mins. off. No other voltages applied. Min peak acceleration = 5g. Frequency = 170 c/s.

4. Va (b) = 250V Rk = 270 ohms.
Vg2(b) = 250V Ck = 1000 μF.
RL = 2 Kohms. Cc = 0.1 μF.
Rg2 = 15 Kohms. g = 2.5

CV4082

NOTES cont'd

5. Pa approx 12 W
   Pg2 " 3.5 W
   RL = 1600 ohms ± 5%

6. Capacity connections.

	HP	LP	E
C ag 1	TC	5	2. 4. 7. 8. C.
C in	5	2. 4. 7. 8.	TC. C.
C out	TC	2. 4. 7. 8.	5. C.

Valve Electronic

ADMIRALTY SURFACE WEAPONS ESTABLISHMENT

CV4085

Specification AD/CV4085 Issue 1A, dated 10.12.63. To be read in conjunction with K1001, BS448 and BS1409	SECURITY	
	Specification	Valve
	Unclassified	Unclassified

Type of valve: Low Hum, Low Microphony Pentode.
Cathode: Indirectly heated.
Envelope: Glass Unmetallised.
Prototype: CV2901

Marking
See K1001/4

Base
B9A

RATINGS

(All limiting values are absolute)

			Note
Heater Voltage	(V)	6.3	
Heater Current	(A)	0.2	
Max Anode Voltage Ia=0	(V)	550	
Max Screen Voltage Ig2=0	(V)	550	
Max Anode Dissipation	(W)	1.0	
Max Screen Dissipation	(W)	0.2	
Max Anode Voltage	(V)	300	
Max Screen Voltage	(V)	200	
Max Cathode Current	(mA)	6.0	
Anode Current	(mA)	3.0	A
Screen Current	(mA)	0.55	A
Mutual Conductance	(mA/V)	1.85	A
Anode Impedance	(megohms)	2.5	A
"Inner" Amplification Factor		38	
Vhk max.	(V)	100	
Max Bulb Temperature	(°C)	165	
Max Shock (Intermittent Operation)	(g)	500	
Max Acceleration (Continuous Operation)	(g)	2.5	
Max external resistance between g1 and k for Wa=>0.2W	(MΩ)	3	
Max external resistance between g1 and k for Wa=<0.2W	(MΩ)	10	

Capacitances (pF)

Cag max		0.05	B
Cge		3.8	B
Cae		5.1	B

Connections

Pin	Electrode
1	g2
2	s
3	k
4	h
5	h
6	a
7	s
8	g3
9	g1

Dimensions
BS448/B9A

Dimensions (mm)		Min	Max
A.	Seated Height	-	49.0
C.	Diameter	19	22.2
D.	Overall Length	-	56.0

Mounting Position
Any

NOTES

A. Measured at Va = 250, Vg2 = 140, Vg1 = - 2.0

B. Measured without metal screen.

CV4085

Tests

To be performed in addition to those applicable in K1001. Tests shall be performed in the specified order unless otherwise agreed with the Inspection Authority.

Test Conditions

Vh (V)	Va (V)	Vg1 (V)	Vg2 (V)	Vg3 (V)
6.3	250	- 2.0	140	0

K1001	Test	Test Conditions	AQL %	Insp. Level	Sym-bol	LIMITS Min.	LAL	Bogey	UAL	Max.	ALD	Unit
7.1	Glass Strain	No voltages	6.5	I								
	GROUP A											
	Insulation	Vg1-all=-100V		100%	R	100	-	-	-	-		MΩ
		Vg2-all=-300V		100%	R	100	-	-	-	-		MΩ
		Va -all=-300V		100%	R	100	-	-	-	-		MΩ
	Reverse Grid Current	Rg1=500 KΩ max		100%	Ig1	-	-	-	-	0.4		µA
	GROUP B	Combined AQL	2.5									
	Heater Current		0.65	II	Ih	185		200		215		mA
5.3	hk Leakage Current	Vhk ± 100V	0.65	II	Ihk					10		µA
		Vhk - 100V (cathode positive)		V2	Ihk				2			µA
	Anode Current		0.65	II	Ia	2.15	-	-	-	3.85		mA
				V2	Ia		2.69	3.0	3.31		0.8	mA
	Screen Current		0.65	II	Ig2			0.6		0.85		mA
	Mutual Conductance		0.65	II	gm	1.55	-	-	-	2.45		mA/V
				V2	gm		1.83	2.0	2.17		0.37	mA/V
→	Microphony	Note 1	0.65	II	VgAC	-	-	-	-	3.5		mV r.m.s.
	Grid Hum	Notes 2, 3	0.65	II	Hum	-	-	-	-	8		µV
	Cathode Hum	Notes 2, 3	0.65	II	Hum	-	-	-	-	60		µV
	Hiss	Notes 3, 4	0.65	II		-	-	-	-	5		µV
	GROUP C	Combined AQL	6.5	I								
	Anode Current	Vg1 - 7.0V Ra = 1.0M Ω	2.5	I	Ia	-	-	-	-	40		µA
	Change in Mutual Conductance	Vh = 5.7V Note 5	2.5	I	Δgm					15		%
	Reverse Grid Current	Vh = 6.9V Note 6	2.5	I	Ig1					1.0		µA

CV4085

K1001	Test	Test Conditions	AQL %	Insp. Level	Symbol	LIMITS Min.	LAL	Bogey	UAL	Max.	AlD	Unit
	GROUP D											
7.2	Base Strain Capacitances	No voltages Measured on a 1 Mc/s bridge with valve mounted in a fully screened socket. Without valve screening can.	6.5 6.5	IA Ic	Cag	-	-	-	-	0.05		pF
					Cin	3.4	-	-	-	4.3		pF
					Cout	4.5	-	-	-	5.8		pF
	Inner Amplification Factor		6.5	IA	$\mu g_1/g_2$	34		38		42		
	GROUP E											
11.3	Fatigue	Vh=6.9V switched 1 min ON, 3 mins OFF Va=Vg2=0 Acceleration 5g min. Frequency 170 c/s ± 5 c/s. Note 7		IA								
	Post Fatigue Tests	Combined AQL	6.5									
	hk Leakage Current	Vhk ± 100V	2.5		Ihk					20		µA
	Reverse Grid Current	Rg1 500K Ω	2.5		Ig1					1.0		µA
	Microphony	As in Group B	2.5		VgAC					6.0		mV r.m.s. ←
	Cathode Hum	As in Group B	2.5		Hum					120		µV
	Mutual Conductance		2.5		gm	1.0						mA/V
11.4	Shock	Hammer Angle 30° No voltages		IA								
	Post Shock Tests	Combined AQL	6.5									
	hk Leakage Current	Vhk ± 100V	2.5		Ihk					20		µA
	Reverse Grid Current	Rg1=500 K Ω	2.5		Ig1					1.0		µA
	Microphony	As in Group B	2.5		VgAC					6.0		mV r.m.s. ←
	Cathode Hum	As in Group B	2.5		Hum					120		µV
	Mutual Conductance		2.5		gm	1.0						mA/V

CV4085

K1001	Test	Test Conditions	AQL %	Insp. Level	Sym-bol	LIMITS Min.	LAL	Bogey	UAL	Max.	ALD	Unit
AV1/5	GROUP F	Va=300V Vg2=200V Rk=820 Ω Vhk= + 100V										
	Life											
AV1/5.3	Intermittent Life											
	Test Point 500 hrs.	Combined AQL	6.5	IA								
AV1/5.6	Inoperatives		2.5									
	Heater Current		2.5		Ih	185	-	-	-	215		mA
	hk Leakage Current	Vhk ± 100V	2.5		Ihk					20		µA
	Reverse Grid Current	Rgl 500 k Ω	2.5		Igl	-	-	-	-	0.4		µA
	Mutual Conductance		2.5		gm	1.2	-	-	-	-		mA/V
	Average change in mutual conductance				Δgm					15		%
	Anode Current		4.0		Ia	2.0	-	-	-	3.85		mA
	Insulation	Vgl-all=100V	4.0		R	50	-	-	-	-		MΩ
		Vg2-all=300V	4.0		R	50	-	-	-	-		MΩ
		Va-all=300V	4.0		R	50	-	-	-	-		MΩ
	Cathode Hum	As in Group B	4.0		Hum	-	-	-	-	120		µV
	Hiss	As in Group B	4.0							10		µV
	Test Point 1000 hrs.	Combined AQL	10.0	IA								
AV1/5.6	Inoperatives		4.0									
	hk Leakage Current	Vhk ± 100V	4.0		Ihk							
	Reverse Grid Current	Rgl 500 KΩ	4.0		Igl	-	-	-	-	0.5		µA
	Mutual Conductance		4.0		gm	1.0	-	-	-	-		mA/V
	Anode Current		6.5		Ia	1.5	-	-	-	3.85		mA
	Cathode Hum	As in Group B	6.5		Hum	-	-	-	-	250		µV
	Hiss	As in Group B	6.5							15		µV
	GROUP G											
AIX/2.5	Electrical re-test after 28 days holding period			100%								
AV1/5.6	Inoperatives		0.5									
	Reverse Grid Current		0.5		Igl	-	-	-	-	0.4		µA

CV4085

NOTES

1. Readings are to be taken on microphony testing equipment as described in K1001, Appendices X and XII, the valve under test being connected as in Fig. 1 on page 6 of this specification. The valve is to be held with the grid support wires in a horizontal plane. Three impacts are to be applied to the valve, the higher of the last two readings being noted. An a.c. voltage at 1000 c/s is then to be applied to the grid and increased from zero to a value at which the noted reading is again obtained on the p-p voltmeter. The limits in the specification refer to the value of this grid voltage.

2. The valve shall be tested using a low-loss socket. The Hum tests shall be conducted by alternately earthing Pins 4 and 5 the highest reading being recorded.

3. Valves are to be tested as described in K1001, Appendix XII. The limits given in the specification refer to the equivalent grid 1 r.m.s. voltage. The values of the resistors shown in Fig. 1 of Appendix XII are to be R2 = 22 ohms, R4 = 47 kilohms, R5 = 100 kilohms, R6 = 680 kilohms, R9 = 1200 ohms.

4. Hiss tests may be conducted with D.C. heating of the cathode.

5. The percentage change in mutual conductance is expressed as:
$$\frac{(gm \text{ at } 6.3V - gm \text{ at } 5.7V) \times 100}{gm \text{ at } 6.3V}$$

6. Prior to this test the valve shall be pre-heated at test conditions for 5 minutes. Igl shall not be rising or out of the limits after a total of 10 minutes.

7. Valves shall be vibrated for 33 hours in each of the required planes.

FIG. 1 MICROPHONY TEST CIRCUIT.

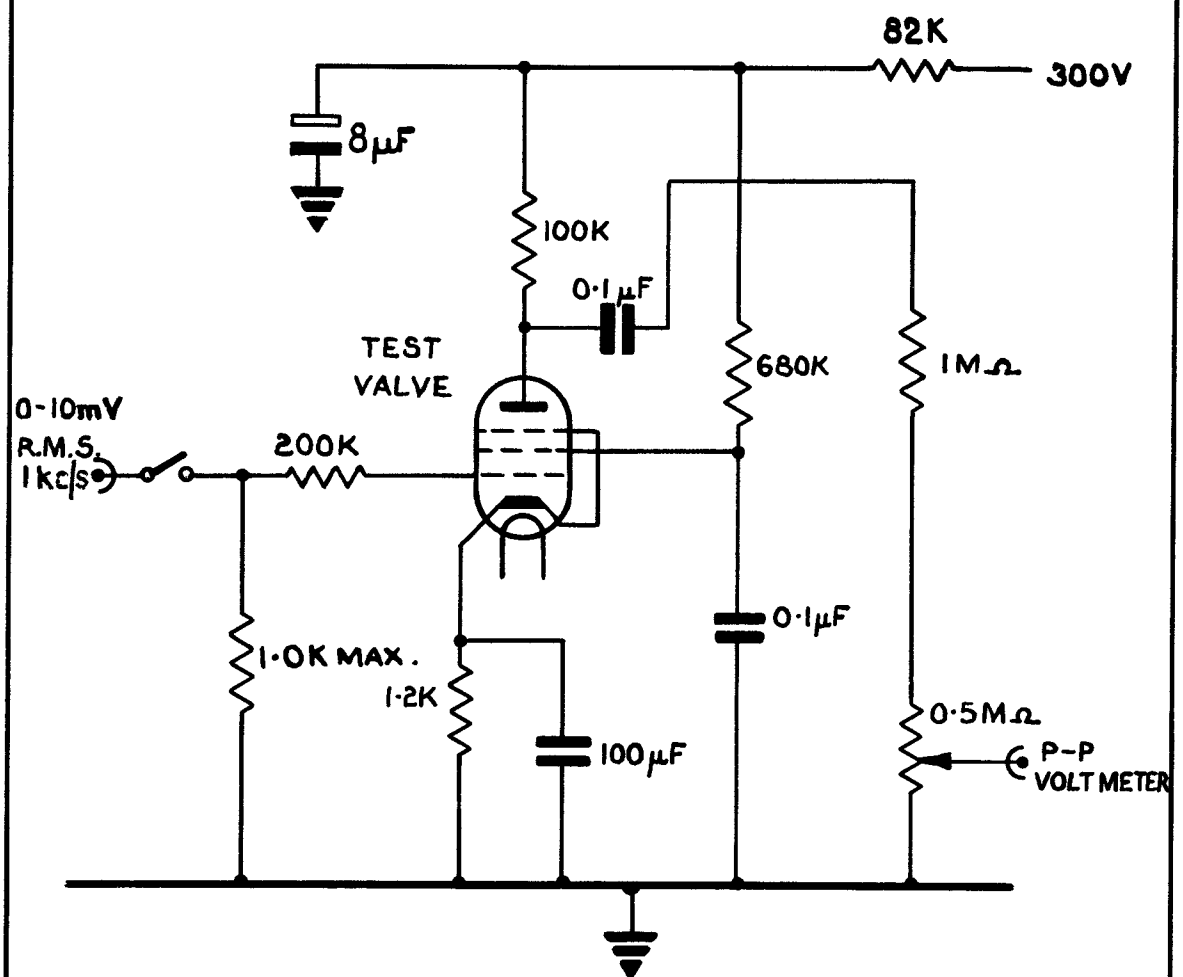

WARNING : THIS VALVE MAY BE RADIOACTIVE

VALVE ELECTRONIC

CV4100

Specification MOA/CV4100 Incorporating MIL-E-1/290B

Issue 1 dated 17.5.60

To be used in conjunction with K1006

SECURITY	
Specification	Valve
Unclassified	Unclassified

indicates a change

TYPE OF VALVE - Reliable Miniature Voltage Regulator
CATHODE - Cold
ENVELOPE - Glass Unmetallised
PROTOTYPE - OA2WA

RATING

All limiting values are absolute

			Note
Min. Total Darkness Starting Voltage	(V)	165	
Min. Ambient light Starting Voltage	(V)	165	
Approx. Operating Voltage	(V)	149	
Min. Operating Current	(mA)	5	
Max. Operating Current	(mA)	30	
Max. Altitude	(ft)	120K	
Min. Ambient Temperature	(°C)	-55	
Max. Bulb Temperature	(°C)	150	

MARKING

See K1001/4 and also Note B

Additional Marking

OA2WA

BASE

B7G

BS448: B7G/2.1/4

CONNECTIONS

Pin	Electrode	
1	Anode	a
2	Cathode	k
3	Int: Con:	I.C.
4	Cathode	k
5	Anode	a
6	Int: Con:	I.C.
7	Cathode	k

DIMENSIONS

BS448: B7G/2.1/4

Dimensions	Min	Max.
D mm	-	67.5
C mm	-	19.0

MOUNTING POSITION

Any

NOTES

A. JOINT SERVICE CATALOGUE NUMBER. 5960 - 99 - 037 - 2254

B. If valves contain Radioactive Material the requirements of K1001/4.4 shall apply.

MIL-E-1/290B
18 June 1957
SUPERSEDING
MIL-E-1/290A
16 July 1954

CV4100

INDIVIDUAL MILITARY SPECIFICATION SHEET

ELECTRON TUBE, RECEIVING, VOLTAGE REGULATOR TYPE

JAN-0A2WA

This specification sheet forms a part of the latest issue of Military Specification MIL-E-1.

Description: Reliable Miniature Voltage Regulator

Ratings:	Total Darkness Ionization Voltage Vdc	Ambient Light Ionization Voltage Vdc	Operating Voltage Vdc	Operating Current mAdc	Ambient Temperature °C	Envelope Temperature °C	Altitude ft
Design: Maximum:	---	---	158	30	---	150	120,000
Minimum:	165	165	140	5	-55	---	---
Test Conditions:	---	---	---	---	---	---	---

Cathode: Glow Discharge
Base: Miniature glass button 7-Pin (A7-1)

Height: Max. 2-5/8 in.
Diameter: Max. 3/4 in.

Envelope: T-5-1/2

Pin No.:	1	2	3	4	5	6	7
	a	k	int com	k	a	int com	k

The following tests shall be performed:

For the purpose of inspection, use applicable reliable paragraphs of MIL-E-1 and Inspection Instructions for Electron Tubes.
For miscellaneous requirements, see Paragraph 3.3, Inspection Instructions for Electron Tubes.

Ref.	Test	Conditions	AQL (%)	Insp. Level or Code	Sym.	LIMITS Min.	LAL	Bogie	UAL	Max.	ALD	Units
	Qualification Approval Tests											
3.1	Qualification Approval:	Required for JAN Marking	---	---								
---	Cathode:	Glow Discharge	---	---								
3.4.3	Base Connections:		---	---								
4.9.20.3	Vibration(1):	Ep=10,000;Ebb/Ib=20mAdc	---	---	Ep:	---	---	---	---	100	---	mVac
	Measurements Acceptance Tests, Part 1, Note 1											
4.13.1	Ionization Voltage(1):	Ebb/Ib=5-30mAdc; Illumination=5-50ft. candles	0.4	II	Ez:	---	---	---	---	165	---	Vdc
4.13.2	Tube Voltage Drop(1):	Ebb/Ib=30mAdc	0.4	II	Etd:	144	---	---	---	153	---	Vdc
4.13.2	Tube Voltage Drop(2):	Ebb/Ib=5mAdc	0.4	II	Etd:	144	---	---	---	153	---	Vdc
4.13.2.1	Regulation:	(1)Etd - (2)Etd	0.4	II	Reg:	---	---	---	---	∠5	---	Vdc
4.7.5	Continuity and Shorts: (Inoperatives)		0.4	II		---	---	---	---	---	---	
4.9.1	Mechanical:	Envelope Outline No. 6-5				---	---	---	---	---	---	
	Measurements Acceptance Tests, Part 2											
4.13.4.3	Noise:	Ebb/Ib=30mAdc	1.0	I	Eb:	---	---	---	---	5	---	mVac
4.13.4.2	Oscillation:	Esig=100mVac; Ebb/Ib=5-30mAdc	1.0	I		---	---	---	---	---	---	
---	Voltage Jump:	Ebb/Ib=5-30mAdc;Note 2	2.5	Code G	Jump:	---	---	---	---	600	---	mVdc
4.13.1	Ionization Voltage(2):	Note 3	2.5	Code G	Ez:	---	---	---	---	165	---	Vdc

Ref.	Test	Conditions	AQL (%)	Insp. Level or Code	Sym.	LIMITS Min.	LaL	Bogie	UaL	Max.	aLD	Units
	Measurements Acceptance Tests, Part 2(Contd)											
4.13.3	Leakage:	Eb=50Vdc; Rp=3000	2.5	Code G	LIb:	---	---	---	---	5	---	uAdc
4.13.2	Tube Voltage Drop(3):	Ebb/Ib=20mAdc	2.5	Code G	Etd:	144	---	---	---	153	---	Vdc
---	Repeatability	Ebb/Ib=10mAdc; Note 4	2.5	Code G	Etd:	---	---	---	---	600	---	mVdc
---	Low Pressure Voltage Breakdown:	Note 5	6.5	Note 6	---	---	---	---	---	---	---	
4.9.19.1	Vibration(2):	Rp=10,000; Ebb/Ib=20mAdc	2.5	Code G	Ep:	---	---	---	---	100	---	mVac
	Degradation Rate Acceptance Tests, Note 7											
4.9.20.5	Shock:	Hammer Angle=60°	---	---		---	---	---	---	---	---	
4.9.20.6	Fatigue:	G=2.5; Fixed Frequency; F=25min., 60 max.	2.5	Note 6		---	---	---	---	---	---	
---	Post Shock and Fatigue Test End Points:	Vibration(2)	---	---	Ep:	---	---	---	---	100	---	mVac
		Ionization Voltage(1)	---	---	Ez:	---	---	---	---	165	---	Vdc
		Tube Voltage Drop(1)	---	---	Etd:	142	---	---	---	155	---	Vdc
		Tube Voltage Drop(2)	---	---	Etd:	142	---	---	---	155	---	Vdc
		Regulation	---	---	Reg:	---	---	---	---	≤ 5	---	Vdc
4.9.6.1	Miniature Tube Base Strain:		---	---		---	---	---	---	---	---	
---	Glass Strain:	Note 8	2.5	I		---	---	---	---	---	---	

Ref.	Test	Conditions	AQL (%)	Insp. Level or Code	Allowable Defectives per Characteristics 1st Sample	Allowable Defectives per Characteristics Combined Samples	Sym.	LIMITS Min.	LIMITS Max.	Units
	Acceptance Life Tests, Note 7									
---	Stability Life Test: (1 hour)	Ebb/Ib=20mAdc; TA=Room; Note 9	1.0	Code I	---	---		---	---	
4.11.4	Stability Life Test End Points:	Change in Tube Voltage Drop(3) of individual tubes	---	---	---	---	Δ Etd: t	---	2.0	Vdc
---	Survival Rate Life Test: (100 hours)	Stability Life Test Conditions or equivalent; Note 10	---	II	---	---		---	---	
4.11.4	Survival Rate Life Test End Points:	Continuity and Shorts (Inoperatives)	0.65	--	---	---		---	---	
		Change in Tube Voltage Drop(3) of individual tubes	1.0	---	---	---	Δ Etd: t	---	5.0	Vdc
4.11.5	Intermittent Life Test:	Stability Life Test Conditions or equivalent; T Envelope=150°C min.; Notes 11,12	---	---	---	---		---	---	
4.11.4	Intermittent Life Test End Points (500 hours)	Note 13								
		Inoperatives; Note 14	---	---	1	3		---	---	
		Regulation	---	---	1	3	Reg:	---	≤ 6	Vdc
		Tube Voltage Drop(1)	---	---	1	3	Etd:	142	155	Vdc
		Tube Voltage Drop(2)	---	---	1	3	Etd:	142	155	Vdc
		Tube Voltage Drop(3)	---	---	1	3	Etd:	142	155	Vdc
		Change in Tube Voltage Drop(3) of individual tubes	---	---	1	3	Etd:	---	6	Vdc
		Ionization Voltage (1)	---	---	1	3	Ez:	---	165	Vdc
		Total Defectives	---	---	4	8		---	---	

Ref.	Test	Conditions	AQL (%)	Insp. Level or Code	Allowable Defectives per Characteristic 1st Sample	Allowable Defectives per Characteristic Combined Samples	Sym.	LIMITS Min.	LIMITS Max.	Units
	Acceptance Life Tests, Note 7(Contd)									
4.11.4	Intermittent Life Test	Note 13								
	End Points:	Inoperatives:Note 14	---	---	2	5		---	---	
	(1000 hours)	Regulation	---	---	2	5	Reg:	---	8	Vdc
		Tube Voltage Drop(1)	---	---	2	5	Etd:	140	158	Vdc
		Tube Voltage Drop(2)	---	---	2	5	Etd:	140	158	Vdc
		Tube Voltage Drop(3)	---	---	2	5	Etd:	140	158	Vdc
		Change in Tube Voltage Drop(3) of individual tubes	---	---	2	5	Etd:	---	8	Vdc
		Ionization Voltage(1)	---	---	2	5	Ez:	---	165	Vdc
		Total Defectives	---	---	5	10		---	---	
	Packaging Requirements									
4.9.18.1.4	Carton Drop:	(d) Package Group 1; Carton Size C								

Note 1: The AQL for the combined defectives for attributes in Measurements Acceptance Tests, Part 1, excluding Inoperatives and Mechanical, shall be one (1) percent. A tube having one (1) or more defects shall be counted as one (1) defective. MIL-STD-105, Inspection Level II shall apply.

Note 2:

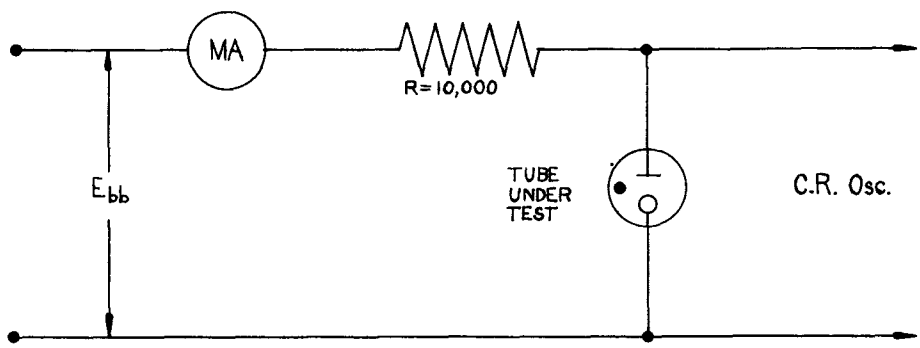

Vary current from 5mAdc to 30mAdc and back to 5mAdc(by adjusting Ebb slowly). Sudden voltage jumps registered on the oscilloscope shall be not greater than the specified value.

Note 3: Conditions for this test shall be those of Ionization Voltage(1) except testing shall be done in total darkness and the tube shall not have conducted or been exposed to light for at least 24 hours prior to testing. The tube shall fire within 20 seconds maximum.

Note 4: The tube shall be tested in the following manner.

a. The voltage drop shall be read at 10 mAdc drain.

b. The tube shall be turned off for one (1) minute.

c. The tube shall be re-started and operated at the same current.

d. Etd shall be read after one (1) minute of operation.

e. The on-off cycle shall be repeated a minimum of five (5) times. The maximum difference in tube voltage drop shall be taken as the measure of repeatability.

Note 5: Place tube under test in a Bell jar with pressure maintained at 3.1±0.2mm Hg. Apply a potential of 200 Vdc to the K and A terminals through a variable series resistor. Adjust resistor to give a current of 20.0 mAdc. There shall be no evidence of flashover or corona at the pins of the tube.

Note 6: This test shall be conducted on the initial lot and thereafter on a lot approximately every 30 days. When one lot has passed, the 30-day rule shall apply. In the event of lot failure, the lot shall be rejected and the succeeding lots shall be subjected to this test until a lot passes. MIL-STD-105, sample size code letter F shall apply.

Note 7 Destructive Tests:

Tubes subject to the following destructive tests are not to be accepted under this specification.

4.9.20.5	Shock
4.9.20.6	Fatigue
4.11.5	Intermittent Life Test

Note 8: Glass strain procedures - All tubes subjected to this test shall have been sealed a minimum of 48 hours prior to conducting this test. All tubes shall be at room temperature. The entire tube shall be immersed in water at not less than 97°C for 15 seconds and immediately thereafter immersed in water at not more than 5°C for 5 seconds. The volume of water shall be large enough that the water temperature will not be appreciably affected by the test. The holder shall be in accordance with Drawing #245-JAN, and the tubes shall be immersed quickly. The tubes shall be so placed in the water that no contact is made with the containing vessel, nor shall the tubes contact each other. After the 5-second submersion period, the tubes shall be removed and allowed to return to room temperature on a wooden surface. After drying at room temperature for a period of 48 hours, the tubes shall be inspected and rejected for evidence of air leaks (Ref. MIL-P-1, par. 3.2.4.3). Electrical rejects, other than inoperatives, may be used in the performance of this test.

Note 9: Stability Life Test: The sampling and testing procedure for this test shall be in accordance with paragraphs 5.3.4.1 (a) to 5.3.4.1 (g), inclusive, of the Inspection Instructions for Electron Tubes.

Note 10: SURVIVAL RATE LIFE TEST: The sampling and testing procedure for this test shall be as defined in paragraphs 5.3.4.2 to 5.3.4.2.4, inclusive, of the Inspection Instructions for Electron Tubes.

Note 11: Intermittent Life Tests: Sampling and acceptance procedures for these tests shall be as defined in paragraphs 5.3.4.3(a) to 5.3.4.3(1), inclusive, of the Inspection Instructions for Electron Tubes, except that the following subparagraph shall be added to 5.3.4.3(e): (4) The life test sample from the first lot accepted each month shall continue on life test for an additional 500 hours (1000 hours total life test time). Failure of this sample to meet the 1000-hour life test end points shall result in loss of eligibility for reduced hours testing.

Note 12: Envelope Temperature is defined as the highest temperature indicated when using a thermocouple of #40 BS or smaller diameter elements welded to a ring of 0.025 inch diameter phosphor bronze in contact with the envelope.

Note 13: Order for Evaluation of Life Test Defects: See paragraph 5.3.4.4 of the Inspection Instructions for Electron Tubes.

Note 14: An inoperative as referenced in Life Test is defined as a tube having one (1) or more of the following defects: discontinuity (Ref. MIL-E-1, par. 4.7.1), shorts (Ref. MIL-E-1, par. 4.7.2) air leaks (Ref. MIL-E-1, par. 3.2.4.3).

Note 15: Referenced specification shall be of the issue in effect on the date of invitation for bid.

WARNING : THIS VALVE MAY BE RADIOACTIVE

MINISTRY OF AVIATION - DLRD/RRE

VALVE ELECTRONIC **V41 1**

Specification MOA/CV4101 Incorporating MIL-E-1/9400 (Note B)
Issue 1 dated 6.7.60
To be read in conjunction with K1006

SECURITY	
Specification	Valve
Unclassified	Unclassified

indicates a change

TYPE OF VALVE - Reliable miniature voltage regulator
CATHODE - Cold
ENVELOPE - Glass
PROTOTYPE - OB2WA

MARKING
K1001/4
Additional Marking
OB2WA
Note C

RATING

All limiting values are absolute

			Note
Min: Total Darkness Starting Voltage	(V)	130	
Min: Ambient Light Starting Voltage	(V)	130	
Approx: Operating Voltage	(V)	108	
Min: Operating Current	(mA)	5	
Max: Operating Current	(mA)	30	
Max: Altitude	(ft)	120K	
Min: Ambient Temperature	(°C)	-55	
Max: Bulb Temperature	(°C)	150	

BASE
B7G
BS448 : B7G/2.1/4

CONNECTIONS

Pin	Electrode	
1	Anode	a
2	Cathode	k
3	Int: con:	I.C.
4	Cathode	k
5	Anode	a
6	Int: con:	I.C
7	Cathode	k

DIMENSIONS

BS448: B7G/2.1/4

Dimension	Min	Max
C	16	19
D	-	67.5

MOUNTING POSITION

Any

NOTES

A. JOINT SERVICE CATALOGUE NUMBER - 59-99-037-2268
B. Appendix at rear of specification gives details of paragraphs in MIL-E-1-D referred to in Notes 9, 10 and 11 in MIL-E-1/940C.
C. This valve may contain Radio Active material and should be marked accordingly

CV4101

MIL-E-1/940C

19 JANUARY 1960

SUPERSEDING
MIL-E-1/291
9 JULY 1953
MIL-E-1/940B
4 DECEMBER 1957

MILITARY SPECIFICATION SHEET

ELECTRON TUBE, RECEIVING, VOLTAGE REGULATOR, MINIATURE

JAN-0B2WA[1]

This specification sheet forms a part of the issue of Military Specification MIL-E-1.

Description: Voltage Regulator, Reliable

Ratings:	Total Darkness Ionization Voltage	Ambient Light Ionization Voltage	Operating Voltage
Absolute:	Vdc	Vdc	Vdc
Maximum:	...	...	118
Minimum:	130	130	108
Test Conditions:	...	...	...

Ratings:	Operating Current	Ambient Temperature	Envelope Temperature	Altitude
Absolute:	mAdc	°C	°C	ft
Maximum:	30	...	150	120,000
Minimum:	5	-55	...	...
Test Conditions:	...	...	...	...

Cathode: Glow Discharge
Base: Miniature glass button 7-Pin

Diameter: Max. ¾ in.
Height: Max. 2⅛ in.

Pin No.:	1	2	3	4	5	6	7
Element:	a	k	int con	k	a	int con	k

Envelope: T-5½

FSC 5960

The following tests shall be performed:

For the purpose of inspection, use applicable reliable paragraphs of Specification MIL–E–1.

For miscellaneous requirements, see 3.6.

Ref.	Test	Conditions	AQL (%)	Insp. Level or Code	Sym	LIMITS Min				Max		Unit
	Qualification Approval Tests											
3.1	Qualification Approval:	Required for JAN Marking	...	...	...	...	...	...	...	...	...	...
...	Cathode	Glow Discharge	...	...	...	...	...	...	...	...	...	...
3.4.3	Base Connections	E7–1	...	...	...	...	...	...	...	...	...	...
4.9.20.3	Vibration (1):	Rp = 10,000; Ebb/Ib = 20mAdc	...	...	Ep	...	...	...	...	100	...	mVac
	Measurements Acceptance Tests, Part 1, Note 1											
4.13.1	α Ionization Voltage (1):	Ebb/ = 5 — 30mAdc; Illumination = 5 — 50ft candles	0.25	II	Ez	...	...	...	...	130	...	Vdc
4.13.2	Tube Voltage Drop (1)	Ebb/Ib = 30mAdc	0.25	II	Etd	105	...	...	...	111	...	Vdc
4.13.2	Tube Voltage Drop (2)	Ebb/Ib = 5mAdc	0.25	II	Etd	105	...	...	...	111	...	Vdc
4.13.2.1	Regulation:	(1) Etd — (2) (Etd)	0.25	II	Reg	...	...	...	...	± 2.5	...	Vdc
4.7.5	Continuity and Shorts (Inoperatives)		0.25	II	...	...	...	...	...	...	...	...
4.9.1	Mechanical production tests	Envelope Outline No. 6–5	...	...	...	...	...	...	...	...	...	...
	Measurements Acceptance Test, Part 2											
4.13.4.3	Noise test	Ebb/Ib = 30mAdc	1.0	I	Eb:	...	...	...	...	5	...	mVac
4.13.4.2	Oscillation test	Esig = 100mVac; Ebb/Ib = 5 — 30mAdc	1.0	I	...	...	...	...	...	...	...	...
...	Voltage Jump	Ebb/Ib = 6 — 10mAdc; Note 2	2.5	Code G	Jump	...	...	...	...	100	...	mVdc
4.13.1	Ionization Voltage (2):	Note 3	2.5	Code G	Ez	...	...	...	...	130	...	Vdc
4.13.3	Leakage current	Eb = 50Vdc; Rp = 3000	2.5	Code G	LIb	...	...	...	...	5	...	uAdc
4.13.2	Tube Voltage Drop (3)	Ebb/Ib = 20mAdc	2.5	Code G	Etd	105	...	...	...	111	...	Vdc
...	Repeatability	Ebb/Ib = 10mAdc; Note 4	2.5	Code G	Etd	...	...	...	...	600	...	mVdc

Ref.	Test	Conditions	AQL (%)	Insp. Level or Code	Sym	LIMITS Min				Max		Unit
...	Low Pressure Voltage Breakdown:	Note 5	6.5	Note 6	...	...	...	...	...	...	...	...
4.9.19.1	Vibration (2)	Rp = 10,000; Ebb/Ib = 20mAdc	2.5	Code G	Ep	...	...	...	...	100	...	mVac
	Degradation Rate Acceptance Tests, Note 7											
4.9.20.5	Shock test	Hammer Angle = 60°	...	...	...	...	...	...	...	...	...	...
4.9.20.6	Fatigue test	G = 2.5; Fixed Frequency F = 25 min., 60 max.	2.5	Note 6	...	...	...	...	...	...	...	...
...	Post Shock and Fatigue	Vibration (2)	...	...	Ez	...	...	...	...	100	...	mVac
	Test End Points:	Ionization Voltage (1)	...	...	Ez	...	...	...	...	130	...	Vdc
		Tube Voltage Drop (1)	...	...	Etd	103	...	...	...	113	...	Vdc
		Tube Voltage Drop (2)	...	...	Etd	103	...	...	...	113	...	Vdc
		Regulation	...	...	Reg	...	...	...	...	± 3	...	Vdc
4.9.6.1	Miniature Tube Base Strain:		...	...	...	...	...	...	...	...	...	...
...	Glass Strain	Note 8	2.5	I	...	...	...	...	...	...	...	...

Ref.	Test	Conditions	AQL %	Insp. level or code	Allowable defectives per characteristic: 1st sample	Allowable defectives per characteristic: Combined sample	Sym	LIMITS Min	LIMITS Max	Ref.
	Acceptance Life Tests, Note 7									
4.11.3.1	Stability Life Test (1 hour)	Ebb/Ib = 20 mAdc; TA = Room; Note 9	1.0	Code I	...	...	...	...	...	...
4.11.4	Stability Life Test End Points	Change in Tube Voltage Drop (3) of individual tubes	...	...	...	...	Δ Etd t	...	2.0	Vdc
4.11.3.1	Survival Rate Life Test (100 hours)	Stability Life Test Conditions or Equivalent Note 10	...	II	...	...	...	...	...	...
4.11.4	Survival Rate Life Test End Points	Continuity and Shorts (Inoperatives)	0.65	...	...	...	...	...	...	...
		Change in Tube Voltage Drop (3) of individual tubes	1.0	...	...	...	Δ Etd t	...	8.0	Vdc

Ref.	Test	Conditions	AQL %	Insp. level or code	Allowable defectives per characteristic		Sym	LIMITS		Ref.
					1st sample	Combined sample		Min	Max	
4.11.5	Intermittent Life Test	Stability Life Test Conditions or Equivalent; T Envelope = 150°C min.; Notes 11, 12	...	...	...	...	...	...	...	...
4.11.4	Intermittent Life Test End Points (500 hours)	Note 13								
		Inoperatives; Note 14	...	...	1	3	...	...	...	...
		Regulation	...	...	1	3	Reg	...	± 3	Vdc
		Tube Voltage Drop (1)	...	...	1	3	Etd	103	113	Vdc
		Tube Voltage Drop (2)	...	...	1	3	Etd	103	113	Vdc
		Tube Voltage Drop (3)	...	...	1	3	Etd	103	113	Vdc
		Change in Tube Voltage Drop (3) of individual tubes	...	...	1	3	Δ Etd t	...	4.0	Vdc
		Ionization Voltage (1)	...	...	1	3	Ez	...	130	Vdc
		Total Defectives	...	...	4	8	...	...	...	...
4.11.4	Intermittent Life Test End Points: (1000 hours)	Note 13								
		Inoperatives; Note 14	...	...	2	5	...	...	...	...
		Regulation	...	...	2	5	Reg	...	± 4	Vdc
		Tube Voltage Drop (1)	...	...	2	5	Etd	103	116	Vdc
		Tube Voltage Drop (2)	...	...	2	5	Etd	103	116	Vdc
		Tube Voltage Drop (3)	...	...	2	5	Etd	103	116	Vdc
		Change in Tube Voltage Drop (3) of individual tubes	...	...	2	5	Δ Etd t	...	5.0	Vdc
		Ionization Voltage (1)	...	...	2	5	Ez	...	130	Vdc
		Total Defectives	...	...	5	10	...	...	...	...
	Packaging Requirements									
4.9.18.1.4	Container Drop:	(d) Package Group 1; Container Size C								

Note 1: The AQL for the combined defectives for attributes in Measurements Acceptance Tests, Part 1, excluding Inoperatives and Mechanical, shall be one (1) percent. A tube having one (1) or more defects shall be counted as one (1) defective. MIL-STD-105, Inspection Level II shall apply.

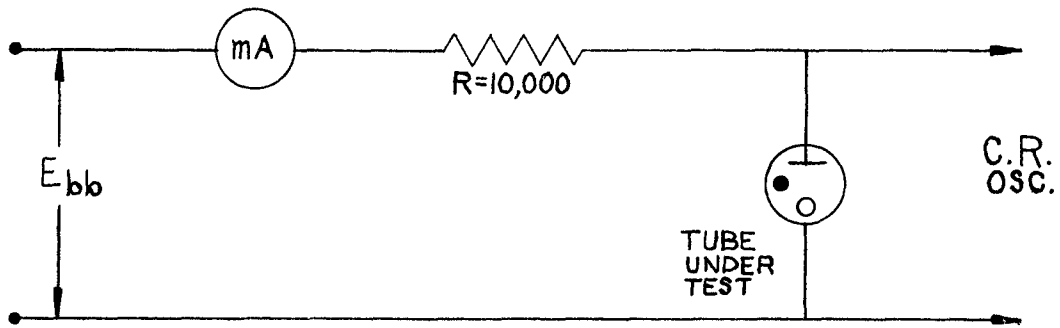

Note 2: Vary current from 6mAdc to 10mAdc and back (by adjusting Ebb slowly). Sudden voltage jumps registered on the oscilloscope shall be not greater than the specified value.

Note 3: Conditions for this test shall be those of Ionization Voltage (1) except testing shall be done in total darkness and the tube shall not have conducted or been exposed to light for at least 24 hours prior to testing. The tube shall fire within 20 seconds maximum.

Note 4: The tube shall be tested in the following manner.

a. The voltage drop shall be read at 10 mAdc drain.

b. The tube shall be turned off for one(1) minute.

c. The tube shall be re-started and operated at the same current.

d. Etd shall be read after one (1) minute of operation.

e. The on-off cycle shall be repeated a minimum of five (5) times. The maximum difference in tube voltage drop shall be taken as the measure of repeatability.

Note 5: Place tube under test in a Bell jar with pressure maintained at 3.1 ± 0.2mm Hg. Apply a potential of 200 Vdc to the K and A terminals through a variable series resistor. Adjust resistor to give a current of 20.0 mAdc. There shall be no evidence of flashover or corona at the pins of the tube.

Note 6: This test shall be conducted on the initial lot and thereafter on a lot approximately every 30 days. When one lot has pessed, the 30-day rule shall apply. In the event of lot failure, the lot shall be rejectedand the succeeding lots shall be subjected to this test until a lot passes. MIL-STD-105, sample size code letter F shall apply.

Note 7: Destructive Tests:

Tubes subject to the following destructive tests are not to be accepted under this specification.

4.9.20.5	Shock
4.9.20.6	Fatigue
4.11.5	Intermittent Life Test

Note 8: Glass strain procedures — All tubes subjected to this test shall have been sealed a minimum of 48 hours prior to conducting this test. All tubes shall be at room temperatures. The entire tube shall be immersed in water at not less than 97°C for 15 seconds and immediately thereafter immersed in water at not more than 5°C for 5 seconds. The volume of water shall be large enough that the water temperature will not be appreciably affected by the test. The holder shall be in accordance with Drawing #245-JAN, and the tubes shall be immersed quickly. The tubes shall be so placed in the water that no contact is made with the containing vessel, nor shall the tubes contact each other. After the 5-second submersion period the tubes shall be removed and allowed to return to room temperature on a wooden surface. After drying at room temperature for a period of 48 hours, the tubes shall be inspected and rejected for evidence of air leaks (see 4.7.6). Electrical rejects, other than inoperatives, may be used in the performance of this test.

Note 9: *Stability life test.* See 20.2.5.1 of Appendix C.

Note 10: *Survival-rate life test.* See 20.2.5.2 to 20.2.5.2.4, inclusive, of Appendix C.

Note 11: *Intermittent life tests.* See 20.2.5.3 of Appendix C.

Note 12: Envelope Temperature is defined as the highest temperature indicated when using a thermocouple of #40 BS or smaller diameter elements welded to a ring of 0.025 inch diameter phosphor bronze in contact with the envelope.

Note 13: *Order for evaluation of life-test defects.* See 4.11.3.1.2.

Note 14: An inoperative as referenced in life test is defined as a tube having one or more of the following defects: discontinuity (see 4.7.1), shorts (see 4.7.2.) air leaks (see 4.7.6).

Note 15: Referenced specification shall be of the issue in effect on the date of invitation for bid.

Preparing activity:
Navy—Bureau of Ships
(Project 5960-0801)

Custodians:
Army—Signal Corps
Navy—Bureau of Ships
Air Force

☆ U. S. GOVERNMENT PRINTING OFFICE: 821543—1960—(V-136)

20.2.5.1. APPENDIX CV4101

STABILITY LIFE TEST

(a) Life-test samples shall be selected from the lot at random in such a manner as to be representative of the lot. If such selection results in a sample containing tubes which are outside the specified initial limits for the specified life-test-end-point characteristics, such tubes shall be replaced by randomly selected acceptable tubes. (See 3.9)

(b) Serially mark all tubes of the sample.

(c) Record the specified characteristic measurements on the entire sample after a maximum operation of 15 minutes under specified voltage and current conditions. (See 3.9)

(d) Operate at specified test conditions for 1 hour + 30 minutes. The life -0 test shall be conducted as specified in 4.11 and 4.11.5, except that the following shall be substituted for 4.11.1(b): The mean electrode potentials, except heater or filament, may be established at values differing by not more than 5 percent from the specified values provided the same average electrode dissipations are obtained that occur with the specified voltages (See 3.9) Fluctuations of all voltages, including heater or filament voltage, shall be as small as practicable.

(e) Record the specified characteristic measurements at the end of this test period. The specified characteristic measurements shall be taken immediately following the test, or the tubes shall be preheated for 15 minutes under specified test voltage and current conditions and the characteristic immediately measured. (See 3.9). The 15-minute preheat shall be considered as part of the test time.

(f) A defective shall be defined as a tu be having change in the specified characteristic greater than that specified. (See 3.9)

(g) A resubmitted lot shall be subjected to all measurements-acceptance tests except mechanical inspection, vibration, and low-pressure-voltage-breakdown tests.

20.2.5.2.
SURVIVAL-RATE LIFE TEST The procedure for assuring the maintenance of a desirable quality level in terms of early life survival consists of a series of normal, reduced, and tightened-inspection sampling plans for use at 100 hours. The sample size is dependent on lot size, and the transfer between normal, reduced, and tightened inspection is dependent upon quality history.

20.2.5.2.1.
SELECTION OF INSPECTION PROCEDURE

(a) Normal inspection. Normal inspection shall be used initially and shall be continued until the conditions for reduced inspection specified in Standard MIL-STD-105 are met, or if not in the last 10 lots inspected shall have been declared nonconforming for survival-rate-life -test qualities. A tube type that has qualified for reduced inspection shall revert to normal inspection under either of the following conditions:

1. If a lot is indicated to be nonconforming by the reduced-inspection plan.

2. If the percent defective, as computed from the defects found from the total first samples of the last 10 lots, is greater than the specified AQL.

The conditions for requalification for reduced inspection shall be the same as for initial qualification for reduced inspection.

(c) Tightened inspection. Tightened inspection shall be used when specified in Standard MIL-STD-105 or when 2 or more lots in the last 10 lots inspected are declared nonconforming for survival-rate-life-test qualities. Tightened inspection shall be used to reevaluate the quality of any lot previously inspection may replace tightened inspection in accordance with the provisions of Standard MIL-STD-105.

20.2.5.2.2.
SELECTION OF SAMPLING PLANS The requisite rates of failure (AQL) shall be designated as the specified acceptance-inspection conditions. (See 3.9)

(a) Normal-inspection sampling plan. This sampling plan shall be selected by using inspection level II of Standard MIL-STD-105 to determine the sample-size code letter. The use of single sampling or double sampling determines the actual sampling plan. When obtaining sample-size code letters any lot containing between 301 and 800 tubes shall be considered to consist of 800 tubes, and any lot containing more than 8,000 tubes shall be considered to consist of 8,001 tubes.

(b) Reduced-inspection sampling plan. This sampling plan shall be selected by using inspection level II of standard MIL-STD-105 to determine the sample-size code letter and the actual sampling plan. If the indicated sample is less than 22 tubes, the actual sampling plan shall be that called for by use of the specified AQL (see 3.9) and sample-size code letter "K". This will provide a sample size of at least 22 tubes except for an AQL of 0.15 percent. In this particular case, sample-size code letter "L" shall be used. When obtaining sample-size code letters, any lot containing between 301 and 800 tubes shall be considered to consist of 800 tubes, and any lot containing more than 8,000 tubes shall be considered to consist of 8,001 tubes.

(c) Tightened-inspection sampling plan. This sampling plan shall be selected by using inspection level II of Standard MIL-STD-105 to determine the sample-size code letter. Thus use of tightened sampling, or double sampling determines the actual sampling plan. When obtaining sample-size code letters, any lot containing between 301 and 800 tubes shall be considered to consist of 800 tubes, and any lot con aining more than 8000 tubes shall be considered to consist of 8,001 tubes.

20.2.5.2.3.
SURVIVAL-RATE-LIFE-TEST SAMPLE. The survival-rate-life-test sample shall be selected from the lot at random in such a manner as to be representative of the lot. If such selection results in a sample containing one or more tubes which are defective as specified in 4.7.5 such tubes shall be replaced by randomly selected good tubes.

20.2.5.2.5. INSPECTION PROCEDURES

(a) Select sample in accordance with 20.2.5.1 (a) of this appendix

(b) Test tubes at 100 hours as specified in 4.7.5. When any tap-short indication is obtained, the test shall be repeated. When any short indication is again obtained, the tube shall be rejected as inoperable.

(c) Determine the number of defectives at the 100-hour period.

(d) If more than the allowable number of defectives occur, declare the lot noncomforming.

(e) A resubmitted lot shall be subjected to all measurements-acceptance tests except mechanical inspection, capacitance, vibration, and low-pressure-voltage-breakdown tests.

NOTE: For other references, i.e. 3.9,4.7.5, 4.11.1(b) and 4.11.5, see K1006.

Ministry of Aviation D.L.R.D./R.A.E. Valve Electronic

C.V.4105

Specification M.O.A./CV.4105

Issue No.1A Dated 9.2.1961

To be read in conjunction with K.1001, BS448 and BS1409.

CLASSIFICATION	
Valve	Specification
Unclassified	Unclassified

→ indicates a change

Type of Valve:- Reliable U.H.F. Low Noise Grounded Grid Triode.

Cathode:- Indirectly Heated.

Envelope:- Glass.

Prototype:- VX3527, CV2453

MARKING

K1001/4

BASE

BS448/B9A

RATINGS

(All limiting values are absolute)

Heater Voltage	(V)	6.3	
Heater Current	(A)	0.37	
Max.Anode Voltage	(V)	200	
Max.Anode Dissipation	(W)	2.5	
Max.Grid Voltage	(V)	0	
Min.Grid Voltage	(V)	-20	
Max.Cathode Current	(mA)	20	
Max.Heater-Cathode Voltage	(V)	100	
Max.Bulb Temperature	(°C)	180	
Max.Shock (Short Duration)	(g)	500	
Max.Acceleration (Continuous Operation)	(g)	2.5	
Mutual Conductance	(mA/V)	14	A
Amplification Factor		50	A
Noise Factor	(dB)	11.5	

CONNECTIONS

PIN	ELECTRODE	
1	Control Grid	g
2	Cathode	k
3	Control Grid	g
4	Control Grid	g
5	Anode	a
6	Control Grid	g
7	Heater	h
8	Heater	h
9	Control Grid	g

DIMENSIONS

BS448/B9A/2.1.

Dimensions	Min.	Max.
'A' Seated Height	-	49
'C' Diameter	19.0	22.2
'D' Overall Length	-	56

CAPACITANCES (pF) NOTE B.

Cin (nom)	4.5
Cak (nom)	0.085
Cout (nom)	1.8

MOUNTING POSITION

Any

NOTES

A. Measured at Va(b) 180V, RL = 3.3kΩ. Rk = 68Ω.

B. Valve screened.

C. The Joint Service Catalogue Number is 5960-99-037-2293.

C.V.4105

TESTS

To be performed in addition to those applicable in K1001.

Tests shall be performed in the specified order unless otherwise agreed with the Inspecting Authority.

Test Conditions:- Unless otherwise specified

Vh (V)	Va(b) (V)	RL (kΩ)	Rk (Ω)	Vg (V)
6.3	180	3.3	68	0

K1001 Ref.	Test	Test Conditions	AQL %	Insp. Level	Symbol	Limits Min.	LAL	Bogey	VAL	Max.	ALD	Units
7.1	Glass Strain	No voltages	6.5	I	-	-	-	-	-	-	-	-
	Group A											
	Electrode Insulation	Vh = 6.3V Note 1										
		Vg1 -all = -20V	-	100%	R	20	-	-	-	-	-	MΩ
		Va -all = -250V	-	100%	R	100	-	-	-	-	-	MΩ
	Reverse Grid Current (1)	Vg1 = -1.0V Rg1 = 500KΩ max	-	100%	-Ig1	-	-	-	-	1.0	-	µA
	Group B											
		Combined AQL	1.0									
	Heater Current		0.65	II	Ih	330	-	370	-	410	-	mA
5.3	Heater Cathode Leakage Current	Vhk = ± 100V Note 2	0.65	II	Ihk	-	-	-	-	10	-	µA
		Vhk = -100V Cathode positive		V2	Ihk	-	-	-	2	-	-	µA
	Anode Current (1)		0.65	II	Ia	11.5	-		-	20	-	mA
				V2	Ia	To be recorded and agreed later						mA
	Mutual Conductance	Max.grid input signal 100mV r.m.s. Note 3	0.65	II	gm	11.0	-		-	18.5	-	mA/V
				V2	gm	To be recorded and agreed later						
	Group C											
		Combined AQL	6.5									
	Anode Current (2)	Vg = -4.0V	2.5	I	Ia	-	-	-	-	2.6	-	mA
	Reverse Grid Current (2)	Vh=6.9V.Vg1=-1.0V Rg1 = 500KΩ max Notes 4 and 5	2.5	I	-Ig1	-	-	-	-	2.0	-	µA
	Change of Mutual Conductance	Vh = 5.7V Notes 5 & 6	2.5	I	gm	-	-	-	-	15	-	%
11.1	Vibration Noise	RL = 2kΩ, Va(b) = 250V Rk = 80Ω Ck = 100µF Cc = 0.1µF Note 7	2.5	I	Va AC	-	-	-	-	15	-	mV rms
	Noise Factor	F = 900 Mc/s Note 8	4.0	I	N	-	-	-	-	12.7	-	dB

Tests (cont'd)

CV4105

K1001 Ref.	Test	Test Conditions	AQL %	Insp. Level	Symbol	Limits Min.	LAL	Bogey	VAL	Max.	ALD	Units
	Group D											
7.2	Base Strain	No voltages	6.5	IA	-	-	-	-	-	-	-	-
AIII	Capacitance	Measured on a 1 Mc/s bridge with valve mounted on a fully shielded socket. Valve Screened Note 10.	6.5	IC	Cin	3.6	-	4.5	-	5.4	-	pF
					Cak	-	-	-	-	0.11	-	pF
					Cout	1.4	-	1.8	-	2.2	-	pF
	Group E.											
11.2	Resonance Search	RL = 2kΩ Va(b) = 250V Frequency (1) 25-200c/s (2) 200-500c/s (3) 500-2500c/s	2.5	IC	Va							
					VaAC)	To be recorded and agreed later						mVrms
					VaAC)							mVrms
					VaAC)							mVrms
11.3	Fatigue	Vh = 6.3V Note 9	-	IA								
	Post Fatigue Tests											
		Combined AQL	4.0	-	-	-	-	-	-	-	-	-
5.3	Heater Cathode Leakage Current	Vhk = ± 100V	2.5	-	Ihk	-	-	-	-	20	-	µA
	Reverse Grid Current (1)	Vg1 = -1.0V Rg1 = 500kΩ max	2.5	-	-Ig1	-	-	-	-	1.5	-	µA
	Mutual Conductance	As in Group A	2.5	-	gm	10.5	-	-	-	-	-	mA/V
11.1	Vibration Noise	As in Group C	2.5	-	VaAC	-	-	-	-	25	-	mVrms
11.4	Shock											
	Post Shock Tests	Combined AQL	4.0	-	-	-	-	-	-	-	-	-
5.3	Heater Cathode Leakage Current	Vhk = ± 100V	2.5	-	Ihk	-	-	-	-	20	-	µA
	Reverse Grid Current (1)	Vg1 = -1.0V Rg1 = 500kΩ max	2.5	-	-Ig1	-	-	-	-	1.5	-	µA
	Mutual Conductance	As in Group A	2.5	-	gm	10.5	-	-	-	-	-	mA/V
11.1	Vibration Noise	As in Group C	2.5	-	VaAC	-	-	-	-	25	-	mVrms
11.4	Shock											
	Group F											
AVI/5	Life											
AVI/5.1	Stability Life (1 hour)											
	Change in Mutual Conductance		1.0	I	Δgm	-	-	-	-	10	-	%

Tests (cont'd)

K1001 Ref.	Test	Test Conditions	AQL %	Insp. Level	Symbol	Limits						Units
						Min.	LAL	Bogey	VAL	Max.	ALD	
AVI/ 5.3	Intermittent Life Test Point 500 Hrs.	Combined AQL	6.5	IA	-	-	-	-	-	-	-	-
AVI/ 5.6	Inoperatives		2.5	-	-	-	-	-	-	-	-	-
5.3	Heater Cathode Leakage Current	Vhk = ± 100V	2.5	-	Ihk	-	-	-	-	25	-	µA
	Reverse Grid Current (1)	Vg1 = -1.0V Rg1 = 500kΩ max	2.5	-	-Ig1	-	-	-	-	1.5	-	µA
	Mutual Conductance	As in Group B	2.5	-	gm	8	-	-	-	-	-	mA/V
	Average Change in Mutual Conductance		-	-	Δgm	-	-	-	-	22.5	-	%
	Electrode Insulation	Vh = 6.3V Vg1 -all = -20V Va -all = -250V	4.0 - -	- - -	- R R	- 10 50	- - -	- - -	- - -	- - -	- - -	- MΩ MΩ
	Noise Factor	F = 900 Mc/s Note 8	4.0	-	N	-	-	-	-	14	-	dB
	Group G											
AIX/ 2.5	Electrical retest after 28 days holding period		-	100%								
AVI/ 5.6	Inoperatives		0.5	-	-	-	-	-	-	-	-	-
	Reverse Grid Current (1)	As in Group A	0.5	-	-Ig1	-	-	-	-	1.5	-	µA

C.V.4105

NOTES

1. Heater strapped to cathode and considered as a single electrode.
2. Heater positive and negative successively.
3. Measured in a Mutual Conductance bridge, frequency 1 Kcps., or any other approved method.
4. Prior to this test the valve shall be preheated for five minutes under the test conditions.
5. -Ig1 shall not be rising or out of limit after a minimum time of 10 minutes, (including preheating time).
6. The change of gm is expressed thus:- $\frac{\text{gm at } 6.3V - \text{gm at } 5.7V}{\text{gm at } 6.3V}$
7. The valve shall be mounted so that the direction of vibration is parallel to the minor axis of the electrode structure. The vibration frequency shall be any fixed frequency within the range 25-100 c.p.s. The min. peak acceleration = 2g. The test shall be of sufficient duration to obtain a steady reading of noise output.
8. To be measured in an approved circuit. (See Figs.1 & 2 on page 5). See Specn. CV2453.
9. Valves shall be vibrated in each of three required planes for not less than 30 hrs. and not less than 99 hours (30 + 39 + 30 hrs.). Heater switched one minute on and three minutes off. No other voltages. Min. peak acceleration = 5g. Frequency = 170 c.p.s.
10. Capacitance connections as follows:-

Capacitance	H.P.	L.P.	E
Cin	2,7,8	1,3,4,6,9,C	5
Cak	H.P.	5	1,3,4,6,9,C
Cout	5	1,3,4,6,9,C	2,7,8

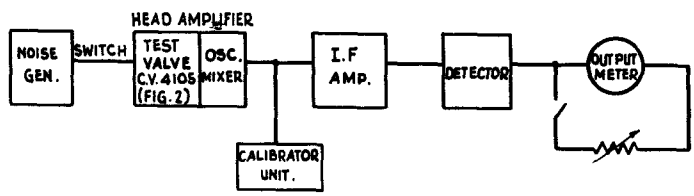

FIG.1 NOISE FACTOR SCHEMATIC DIAGRAM.

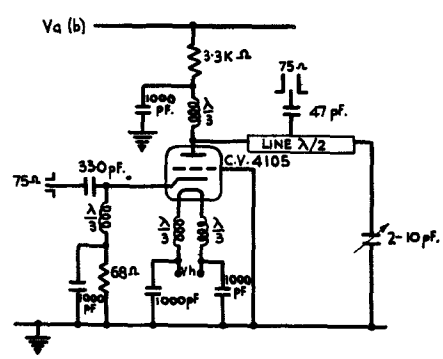

FIG.2. HEAD AMPLIFIER VALVE TEST CIRCUIT.

CV4108

VALVE ELECTRONIC

ADMIRALTY SURFACE WEAPONS ESTABLISHMENT

Specification AD/CV4108 incorporating MIL/1301B/NAVY Issue 1 dated 1.10.1962 To be read in conjunction with K1006 and BS448	**SECURITY**	
	Specification	**Valve**
	Unclassified	Unclassified

TYPE OF VALVE: Medium Mu Double Triode
CATHODE: Indirectly heated
ENVELOPE: Glass
PROTOTYPE: 7308
E.I.A. DESIGNATION:

MARKING

See K1001/4
Additional marking 7308

BASE

BS.448/B9A

RATING
(All limiting values are absolute)

			Note
Heater Voltage	(V)	6.3	
Heater Current	(A)	.335	
~~Max. Anode~~ Voltage	(V)	100	A
Max. "~~[illegible]~~" Anode Voltage	(V)	250	A
Max. Anode Dissipation	(W)	1.65	A
Max. Heater-Cathode Voltage	(V)	+ 70 -135	A
Max. Negative Grid Voltage	(V)	110	A
Amplification Factor		33	B
Mutual Conductance	(mA/V)	12.5	B
Max. Bulb Temperature	(°C)	165	
MAX. PEAK ANODE VOLTAGE (IA=0) V 440			

A4

CONNECTIONS

PIN	ELECTRODE	
1	Anode"	a"
2	Grid"	g"
3	Cathode"	k"
4	Heater	h
5	Heater	h
6	Anode'	a'
7	Grid'	g'
8	Cathode'	k'
9	Int.Shield	

DIMENSIONS

Dimensions (min.)	MIN.	MAX
A. Seated Height	-	~~55.6~~ 49.2
B. Diameter	19.0	22.2
D. Overall length	-	~~[illegible]~~ 55.6

A13.
A13

CAPACITANCES (NOM.)

C ag	(pF)	1.4	A.C.
C in	(pF)	3.3	A.C.
C out'	(pF)	1.8	C.
C out"	(pF)	1.7	C.
C g' to g" (max.)	(pF)	.008	C.
C a' to a" (max.)	(pF)	.060	C.

MOUNTING POSITION

Any

NOTES

A. Per section.

B. At Va(b) = 100V; Vg(b) = +9V; Rk=680 ohm

C. Without external shield

D. The Joint Services Catalogue Number is:- 5960-99-037-2502

CV4108

MIL-E-1/1301B(NAVY)

MILITARY SPECIFICATION SHEET

ELECTRON TUBE, TYPE 7308.

The requirements and tests of the latest issue of Specification MIL-E-1 shall apply, except as otherwise required herein.

Description: Twin Triode, Medium Mu

Ratings:	Ef V	Ebb Vdc	Eb Vdc	Ecc Vdc	Ec Vdc	Ehk v	Rk/k ohms
Absolute Maximum:	6.6	--	250	--	--	70	--
Minimum:	6.0	--	--	--	-110	-135	--
Test Cond:	6.3	100	Approx.90	+ 9	--	--	680

Ratings:	Rg/g Meg	Ik/k mAdc	Ic/g mAdc	Pp/p W	T envelope °C	Alt ft.
Absolute Maximum:	0.5	22	--	1.65	165	60,000
Minimum:	--	--	--	--	--	--
Test Cond:	-- Note 1	--	--	--	--	--

Cathode: Coated unipotential
Base: Miniature Button, 9 pin,

Pin No:	1	2	3	4	5	6	7	8	9
Element:	2p	2g	2k	h	h	lp	lg	lk	sd

Diameter: 7/8 inch max.
Height: 2-3/16 in.max.
Envelope: T-6-1/2

For the purposes of acceptance inspection, use applicable reliable paragraphs of Specification MIL-E-1.

Ref.	Test	Conditions	AQL % Defective	Insp. Level or Code	Sym.	Limits (See Note 3)						
						Min.	LAL	Bogie	UAL	Max.	ALD	Units
3.1	General Qualification	Required Note 22	--	--	--	--	--	--	--	--	--	--
3.6	Performance		--	--	--	--	--	--	--	--	--	--
3.7	Marking	Note 21	--	--	--	--	--	--	--	--	--	--
	Qualification Tests (see Note 17)											
--	Cathode	Coated unipotential	--	--	--	--	--	--	--	--	--	--
3.4.3	Base connections	Outline E9-1	--	--	--	--	--	--	--	--	--	--
4.9.19.9	Vibration:	Rp=2,000 Ck=1,000 uf Note 16	--	--	Ep	--	--	--	--	100		mVac

Ref	Test	Conditions	AQL (% Defective)	Insp. Level or Code	Symbol	Limits Note 4						Units
						Min	LAL	Bogie	UAL	Max	ALD	
	Measurements acceptance tests, part 1, Note 3											
4.10.8	Heater Current	Rk=680	-	-	If	-	320	335	350	-	28	mA
4.10.8	Heater Current		0.65	II	If	305	-	-	-	365	-	mA
4.10.15	Heater-Cathode Leakage	Ehk= +100 Vdc.	0.65	II	Ihk	-	-	-	-	10	-	µAdc.
		Ehk= -100 Vdc. Note 2			Ihk	-	-	-	-	10	-	µAdc.
4.10.6.1	+Grid Current(1)	Note2	0.65	II	Ic	0	-	-	-	- 0.1	-	uAdc
4.10.4.1	Plate Current(1)	Ebb= 90Vdc Ecc= 0 Rk =80 Note 2	-	-	Ib	-	13.3	15.0	16.7	-	5.4	mAdc
4.10.4.1	+Plate Current(1)	Ebb= 90Vdc Ecc= 0 Rk= 80 Note 2	0.65	II	Ib	11.3	-	-	-	18.7	-	mAdc
4.10.4.1	Plate Current(2)	Ec=-15Vdc Eb=150V Note 2	0.65	II	Ib	-	-	-	-	5	-	µAdc
4.10.9	Transconductance(1)	Note 2	-	-	Sm	-	11700	12500	13300	-	2500	µmhos
4.10.9	Transconductance(1)	Note 2	0.65	II	Sm	10400	-	-	-	14600	-	µmhos
4.7.5.	Continuity and Shorts (Inopertives)		0.4	II	-	-	-	-	-	-	-	-
4.9.1.	Mechanical	Envelope Outline No (6-7)	-	-	-	-	-	-	-	-	-	-
	Measurements acceptance tests, part 2.											
4.8	Insulation of Electrodes	Note 2 g-all= 10 meg.	2.5	L6	R.	100	-	-	-	-	-	Meg.
		p-all in series.			R.	100	-	-	-	-	-	Meg.
4.10.9	Transconductance(2)	Ef=5.7Vac. Note 2	2.5	I	Sm: Ef.	-	-	-	-	15	-	%

Ref:	Test	Conditions	AQL (% Defective)	Insp. Level or Code	Limits, Note 4 Sym.	Min.	LAL	Bogie	UAL	Max.	ALD	Units
4.10.11.2	Amplification Factor		6.5	1	Mu	26.5	---		---	39.5	---	
4.10.6.1	Grid Current(2)	Notes 2 and 15	2.5	1	Ig	0	---	---	---	-0.5	---	µAdc
4.10.3.1	R.F. Noise	Ecal=30 mV Notes 16 and 18	2.5	1				---	---	---	---	
4.10.3.4	Noise and Microphonics. This test may be carried out on alternative approved test gear to that called up in Note 20.	Ebb=250 Vdc: Rk=680 ohms: Ecal=5 mVac: Ck=100µf Rp=10,000 Notes 2 and 20	2.5	1		---	---	---	---	---	---	
4.10.14	Capacitance											
	No Shield	Note 2			Cgp:	1.2	---	---	---	1.6	---	pf
	No Shield	Note 2			Cin:	2.7	---	---	---	3.9	---	pf
	No Shield	Sect.1	6.5	Code E	Cout:	1.6	---	---	---	2.0	---	pf
	No Shield	Sect.2			Cout:	1.5	---	---	---	1.9	---	pf
	No Shield				Cgg	---	---	---	---	.008	---	pf
	No Shield				Cpp	---	---	---	---	.060	---	pf
4.9.12.1	Low Pressure Voltage Breakdown:	Pressure = 55+ 5 mmHg: Voltage= 300 Vac	6.5	Note 19	--	---	---	---	---	---	---	---
4.9.19.1	Vibration (2):	Rp=2,000 Ck=1,000 Note 16	6.5	Code 1	Ep:	---	---	---	---	50	---	mVac
		Degradation Rate Acceptance Tests Note 6										
4.9.20.5	Shock	Hammer Angle = 30° Ehk = +100Vdc: Note 5:		---		---	---	---	---	---	---	
4.9.20.6	Fatigue	G=2.5 Fixed Frequency 50 c.p.s.	6.5	Note 19		---	---	---	---	---	---	
---	Post Shock and Fatigue Test End Points	Vibration (2) Heater Cathode Leakage	---	---	Ep:	---	---	---	---	75	---	mVac
		Ehk=+100	---	---	Ihk:	---	---	---	---	15	---	µAdc
		Ehk=-100	---	---	Ihk:	---	---	---	---	15	---	µAdc

Ref.	Test	Conditions	AQL (% Defective)	Insp. Level or Code	Limits Note 4							Units
					Sym.	Min.	LAL	Bogie	UAL	Max.	ALD	
		Transconductance (1)	---	---	Sm:	9,000	---	---	---	16,500	---	µmhos
		Grid Current (1)	---	---	Ic:	0	---	---	---	-0.2	--	µAdc
4.9.6.1	Miniature Tube Base Strain:		----	---	---	---	---	---	---	---	--	---
4.9.6.3	Glass Strain		2.5 NOTE 9	I								

Ref.	Test	Conditions	AQL (% Defective)	Insp. Level or Code	Allowable defectives per characteristics		Sym.	Limits		Units
					1st sample	Combined samples		Min	Max	
	Acceptance Life Tests. Note 6									
4.11.7	Heater-Cycling Life Test:	Ef=7.5V:Ehk=+100V dc Ec=Eb=0; 1 min. on, 4 min. off Note 7	---	---	---	---		---	---	
4.11.4.	Heater Cycling Life Test End Points	Heater-Cathode Leakage								
		Ehk=+100V dc	---	---	---	---	Ihk:	---	20	µAdc
		Ehk=-100V dc	---	---	---	---	Ihk:	---	20	µAdc
4.11.3.1 (a)	Stability Life Test:	Ehk=+135V dc Rg=47,000 TA=Room Notes 2 and 8	1.0	Code I	---	---		---	---	
4.11.4	Stability Life Test End Points (2 and 20 hours)	Change in Transconductance (1) of individual tubes	---	---	---	---	ΔSm: t	---	10	%
4.11.3.1. (b)	Survival Rate Life Tests	Stability Life Test Conditions or Equivalent; Notes 2, 9 and 10	---	II	---	---		---	---	
4.11.4	Survival Rate Life Test End Points (100 hours)	Continuity and Shorts (Inoperatives)	0.65	---	---	---		---	---	
		Transconductance (1)	1.0	---	---	---	Sm:	9000	---	µmhos

Ref.	Test	Conditions	AQL (% Defective)	Insp. Level or Code	Allowable defectives per characteristic		Sym.	Limits		Units
					1st sample	Combined samples		Min.	Max.	
		Acceptance Life Tests Note 6 (Cont'd).								
4.11.3.1	Intermittent Life Test	Stability Life Test Conditions: T Bulb=165°C Min. Notes 2, 11 and 12	---	---	---	---		---	---	---
4.11.4	Intermittent Life Test End Points: 500 hours)	Note 13 Inoperatives	---	---	1	3		---	---	
		(Note 14) Grid Current (1)	---	---	1	3	Ic:	0	-0.9	µAdc
		Heater Current	---	---	1	3	If:	305	365	mA
		Change in Transconductance (1) of individual tubes	---	---	1	3	ΔSmt	---	15	%
4.11.4		Transconductance (2)	---	---	2	5	ΔSmEf	---	15	%
		Heater Cathode Leakage								
		Ehk=+100Vdc	---	---	1	3	(Ihk:	---	20	µAdc
		Ehk=-100Vdc					(Ihk:	---	20	µAdc
		Insulation of Electrodes								
		g-all	---	---	2	5	(R:	50	---	Meg
		p-all					(R:	50	---	Meg
		Transconductance (1) average change	---	---	---	---	Avg ΔSmt	---	15	%
		Total Defectives	---	---	4	8		---	---	
4.11.4	Intermittent Life Test End Points: (1000 hrs.)	Note 13 Inoperatives: Note 14	---	---	2	5		---	---	
		Grid Current (1)	---	---	2	5	Ic:	0	-0.9	µAdc
		Heater Current	---	---	2	5	If:	305	365	mA
		Change in Transconductance (1) of individual tubes	---	---	2	5	ΔSmt	---	25	%
4.11.4		Heater Cathode Leakage								
		Ehk=+100V dd	---	---	2	5	(Ihk	---	20	µAdc
		Ehk=-100V dc					(Ihk	---	20	µAdc
		Insulation of Electrodes								
		g-all	---	---	3	6	(R:	50	---	Meg
		p-all					(R:	50	---	Meg
		Total Defeetives	---	---	5	10		---	---	
4.9.18.1.1	Container Drop:	Notes 23 and 24								
5.1	Preparation for delivery	Note 25								

Note 1: This value is for operation under fixed bias conditions. With cathode bias, Rg may be 1 megohm maximum.

Note 2: Test each unit separately.

Note 3: The AQL for the combined defectives for attributes in measurements acceptance tests, part 1, excluding inoperatives and mechanical shall be 1.0 per cent. A tube having one or more defects shall be counted as one defective. Standard MIL-STD-105, inspection level II shall apply.

Note 4: Variable sampling procedures: (See 4.1.1.7).

Note 5: A grid resistor of 0.1 megohm shall be added; however, this resistor will not be used when a thyratron type short indicator is employed.

Note 6: Destructive tests: Tubes subjected to the following destructive tests are not to be accepted under this specification:

4.9.20.5	Shock
4.9.20.6	Fatigue
4.11.7	Heater-Cycling Life Test
4.11.5	Intermittent Life Test

Note 7: The no load to steady full load regulation of the heater voltage supply shall be not more than 3.0 per cent. This test shall be made on a lot by lot basis. A failure or defect shall consist of an open heater, open cathode circuit, heater cathode short, or heater cathode leakage current in excess of the heater cycling life test end point limit specified herein.

Note 8: The sampling and testing procedure for the Stability life test shall be in accordance with paragraph 20.2.5.1 of Appendix C of Specification MIL-E-1.

Note 9: The sampling and testing procedure for the Survival rate life test shall be in accordance with paragraphs 20.2.5.2 through 20.2.5.2.4 of Appendix C of Specification MIL-E-1.

Note 10: The equivalent stability life test conditions for Survival rate life test shall be in accordance with paragraph 20.2.5.2.5 of Appendix C of Specification MIL-E-1.

Note 11: Sampling and acceptance procedures for Intermittent life tests shall be in accordance with paragraph 20.2.5.3 of Appendix C of Specification MIL-E-1.

Note 12: Envelope temperature is defined as the highest temperature indicated when using a thermocouple of ⧺ 40BS or smaller diameter elements welded to a ring of 0.025 inch diameter phosphor bronze in contact with the envelope. Envelope temperature requirements will be satisfied if tube, having bogie lb (± 5%) under normal test conditions, is determined to operate at minimum specified temperature at any point in the life test rack.

Note 13: For order for evaluation of life test defects, see paragraph 4.11.3.1.2 of Specification MIL-E-1.

Note 14: An inoperative as referenced in life test is defined as a tube having one or more of the following defects: discontinuity (ref. Specification MIL-E-1 par. 4.7.1), shorts (ref. Specification MIL-E-1, par. 4.7.2), air leaks (ref. Specification MIL-E-1, par. 4.7.6).

Note 15: Prior to this test, tubes shall be preheated a minimum of 5 minutes with all sections operating at the conditions indicated below. A 3 minute test is not permitted. Test at preheat conditions within 3 seconds after preheating. Grid current (2) shall be the last test performed on the sample selected for the grid current (2) test.

/Ef

Ef	Ecc	Ebb	Rk	Rg
V	Vdc	Vdc	ohms	Meg
(7.0)	(+9)	(100)	(680)	(0.047)

Note 16: Tie 1k to 2k; 1g to 2g and 1p to 2p. Parasitic suppressors of 50 ohms permitted.

Note 17: All tests listed hereon shall be performed during qualification: however, these three tests are normally performed for qualification inspection only.

Note 18: In addition to the rejection criteria of paragraph 4.10.3.1 of Specification MIL-E-1, the output shall be read on a VU meter using a rejection limit of 5 VU. Five VU is the meter deflection obtained with a steady state output of 3 Mw from the amplifier.

Note 19: This test shall be conducted on the initial lot and thereafter on a lot approximately every 30 days. Once a lot has passed, the 30-day rule shall apply. In the event of lot failure the lot shall be rejected and the succeeding lots shall be subjected to this test until a lot passes. Standard MIL-STD-105, sample size code letter F, shall apply.

Note 20: The rejection level shall be set at the VU meter reading obtained during calibration. Test gear other than the VU meter may be used if approved by the Specification Authorities.

Note 21: Omitted.

Note 22: Omitted.

Note 23: Not required during qualification of tube.

Note 24: Rough handling (container drop) test (d) and container size B shall apply.

Note 25: Preservation, packaging and packing - unless otherwise specified in the contract or order, preservation, packaging and packing shall be as follows:-

(a) Preservation and packaging shall be sufficient to afford adequate protection against corrosion and deterioration during shipment from the supply source to the using activity and until installation.

(b) Packing shall be accomplished in a manner which will insure acceptance and protection against physical or mechanical damage during direct shipment from the supply source to the using activity.



. In the case of valves with gold plated pins the AQL (% Defective) shall be 6.5."

VALVE ELECTRONIC

SERVICES VALVE TEST LABORATORY

CV 5008

SPECIFICATION AD/CV.5008 incorporating MIL-E-1/510D	SECURITY	
	SPECN.	VALVE
ISSUE NO. 3 DATED 1.11.63.	Unclassified	Unclassified
To be read in conjunction with K.1006.		

TYPE OF VALVE Reliable Double Triode

CATHODE Indirectly heated

ENVELOPE Glass

PROTOTYPE 6080WA

MARKING

See K.1001/4

Additional marking 6080WA

BASE

Large wafer octal with metal sleeve

RATINGS

Absolute, unless otherwise stated

			NOTE
Heater voltage, nominal	(V)	6.3	
Heater current, nominal	(A)	2.5	
Max. heater-cathode voltage	(V)	300	
Max. D.C. anode voltage	(V)	250	
Max. peak forward anode voltage	(V)	3000	
Max. anode dissipation	(W)	13	A
Max. D.C. grid voltage	(V)	0	
Max. grid resistance	(Megohms)	1.0	A,B
Max. grid current	(mA)	5.0	A
Max. bulb temperature	(°C)	230	
Max. altitude	(ft)	60,000	

CONNECTIONS

Pin	Electrode
1	Grid 2
2	Anode 2
3	Cathode 2
4	Grid 1
5	Anode 1
6	Cathode 1
7	Heater
8	Heater

DIMENSIONS

See drawing page 6

MOUNTING POSITION

Any

NOTES

A. Each section.

B. For cathode bias operation; where fixed bias or fixed and auto-bias is used max. allowable grid resistance = 0.1 Megohms.

C. Notice to Designers

(a) The slope of one half of the valve is affected to some extent by the dissipation of the other half due to heat radiation.

(b) This valve may show at full dissipation considerable reverse anode current due to anode emission.

THE TEST REQUIREMENTS GIVEN IN SPECIFICATION MIL-E-1/5101D, FOR JAN 6080WA SHALL APPLY (ALL)

CV 5008

MIL-E-1/510D
20 December 1961
SUPERSEDING
MIL-E-1/510C
9 September 1960

MILITARY SPECIFICATION SHEET

ELECTRON TUBE, RECEIVING

1/JAN-6080WA, 6082WA
a b

This specification sheet forms a part of the latest issue of Military Specification MIL-E-1.

DESCRIPTION: Twin triode, low Mu

PIN CONNECTIONS AND DIMENSIONS: See figure 1

ABSOLUTE-MAXIMUM RATINGS:

Parameter:	Test code	Ef	Eb	Ec	Ehk	epy	Rk/k	Rg/g	Ic/g	Pp/p	TE	Alt
Unit:	a, b	V	Vdc	Vdc	v	V	ohms	Meg	mA	W	°C	ft
Maximum:	a	6.6	250	0	⌿300	3,000	---	(See note 1)	5.0	13	⌿230	60,000
	b	27.8	250	0	⌿300	3,000	---	(See note 1)	5.0	13	⌿230	60,000
Minimum:	a	6.0	---	---	-300	---	---	---	---	---	---	---
	b	25.2	---	---	-300	---	---	---	---	---	---	---
TEST CONDITIONS:	a	6.3	135	0	---	---	250	---	---	---	---	---
	b	26.5	135	0	---	---	250	---	---	---	---	---

PAR. NO.	TEST	TEST CODE	CONDITIONS	AQL (PERCENT DEFECTIVE)	INSPECTION LEVEL OR CODE	SYMBOL	LIMITS (SEE NOTE 2)						UNIT
							Min	LAL	Bogey	UAL	Max	ALD	
	General												
3.1	Qualification	a, b	Required for JAN marking	---	---	---	---	---	---	---	---	---	---
3.2.28	Reliable tubes	a, b	(See note 3)	---	---	---	---	---	---	---	---	---	---
3.6	Performance	a, b	(See note 4)	---	---	---	---	---	---	---	---	---	---
	Qualification inspection (see note 5)												
---	Cathode	a, b	Coated unipotential	---	---	---	---	---	---	---	---	---	---
3.4.3	Base connections	a, b	(See fig. 1)	---	---	---	---	---	---	---	---	---	---
4.9.20.3	Variable-frequency vibration (1)	a, b	Ecl = -7 Vdc; Rp = 2,000 ohms (see note 6)	---	---	Ep	---	---	---	---	100	---	mVac
	Acceptance inspection, part 1 (production) (see note 7)												
4.7.5	Continuity and shorts tests (for reliable tubes)	a, b		0.4	II	---	---	---	---	---	---	---	---
4.9.1	Mechanical-production tests	a, b	(See fig. 1)	---	---	---	---	---	---	---	---	---	---

1/To identify immediately those tests that are applicable to a given type or to several types, tube types are designated by letters.

PAR. NO	TEST	TEST CODE	CONDITIONS	AQL (PERCENT DEFECTIVE)	INSPECTION LEVEL OR CODE	SYMBOL	LIMITS (SEE NOTE 2)						UNIT
							Min	LAL	Bogey	UAL	Max	ALD	
	Acceptance inspection, part 1 (production) (see note 7) - Contd												
4.10.4.1	Plate current (1)	a, b	(See notes 8 and 9)	---	---	Ib	---	115	125	135	---	25	mAdc
4.10.4.1	Plate current (1)	a, b	(See notes 8 and 9)	0.65	II	Ib	100	---	---	---	150	---	mAdc
4.10.6.1	† Total grid current	a, b	Rg = 1.0 Meg; Rk = 125 (see notes 6 and 10)	0.65	II	Ic	0	---	---	---	-2.0	---	uAdc
4.10.8	Heater current	a		0.65	II	If	2.35	---	---	---	2.65	---	A
		b		0.65	II	If	0.55	---	---	---	0.65	---	A
4.10.9	Transconductance (1)	a, b	(See notes 8 and 9)	---	---	Sm	---	6,600	7,000	7,400	---	1,000	umhos
4.10.9	Transconductance (1)	a, b	(See notes 8 and 9)	0.65	II	Sm	8,000	---	---	---	8,200	---	umhos
4.10.15	Heater-cathode leakage	a, b	Ehk = +100 Vdc Ehk = -100 Vdc (see note 8)	0.65	II	Ihk Ihk	--- ---	--- ---	--- ---	--- ---	25 25	--- ---	uAdc uAdc
	Acceptance inspection, part 2 (design)												
4.8	Insulation of electrodes	a, b	g to all p to all (see note 8)	2.5	L6	R R	200 200	--- ---	--- ---	--- ---	--- ---	--- ---	Meg Meg
4.9.12.1	Low-pressure voltage breakdown	a, b	Pressure = 55±5 mm Hg; voltage = 500 Vac	6.5	(See note 11)	---	---	---	---	---	---	---	---
4.9.19.1	Low frequency vibration (2)	a, b	Rp = 2,000; Ec = -7 Vdc (see note 6)	6.5	Code G	Ep	---	---	---	---	50	---	mVac
4.10.4.1	Plate current (2)	a, b	Eb = 250 Vdc; Ec = -200 Vdc (see notes 8 and 9)	2.5	I	Ib	---	---	---	---	10	---	mAdc
4.10.9	Transconductance (2)	a	Ef = 5.7 V (see notes 8 and 9)	2.5	I	ΔSm Ef	---	---	---	---	10	---	%
		b	Ef = 23.9 V (see notes 8 and 9)	2.5	I	ΔSm Ef	---	---	---	---	10	---	%
4.10.11.1	Amplification factor	a, b	Rk = 250 ohms (see notes 8 and 9)	6.5	Code G	Mu	1.5	---	---	---	2.5	---	---
4.10.4.1	Plate current (1) (difference between sections)	a, b		2.5	I	Ib	---	---	---	---	25	---	mAdc

AN-6080WA, 6082WA
a b

PAR NO.	TEST	TEST CODE	CONDITIONS	AQL (PERCENT DEFECTIVE)	INSPECTION LEVEL OR CODE	SYMBOL	LIMITS (SEE NOTE 2)						UNIT
							Min	LAL	Bogey	UAL	Max	ALD	
	Acceptance inspection, part 3 (degradation) (see note 12)												
4.9.20.5	Shock test	a, b	Hammer angle = 30°; Ehk = ∠100 Vdc; Ec = -7 Vdc; Rb = 2,000 ohms; Rk = 0 (see notes 6 and 13)	---	---	---	---	---	---	---	---	---	---
4.9.20.6	Fatigue test	a, b	G = 2.5 min; fixed frequency; F = 25 min, 60 max; apply only Ef	6.5	(See note 11)	---	---	---	---	---	---	---	---
---	Post shock and fatigue test end points	a, b	Vibration (2)	---	---	Ep	---	---	---	---	100	---	mVac
		a, b	Heater-cathode leakage										
			Ehk = ∠100 Vdc	---	---	Ihk	---	---	---	---	50	---	uAdc
			Ehk = -100 Vdc			Ihk	---	---	---	---	50	---	uAdc
		a, b	Change in transconductance (1) of individual tubes	---	---	ΔSmt	---	---	---	---	10	---	%
		a, b	Grid current	---	---	Ic	---	---	---	---	-3.0	---	uAdc

PAR NO.	TEST	TEST CODE	CONDITIONS	AQL (PERCENT DEFECTIVE)	INSPECTION LEVEL OR CODE	ALLOWABLE DEFECTIVES PER CHAPACTERISTIC		SYMBOL	LIMITS		UNIT
						First sample	Combined samples		Min	Max	
	Acceptance inspection, part 3 (life) (see note 12)										
4.11.7	Heater-cycling life test	a	Ef = 7.5 V; Ehk = 300 Vdc; Eb = Ec = 0; 1 min on, 4 min off (see note 14)	---	---	---	---	---	---	---	---
		b	Ef = 31.8 V; Ehk = 300 Vdc; Eb = Ec = 0; 1 min on, 4 min off (see note 14)	---	---	---	---	---	---	---	---
4.11.4	Life-test end points (heater-cycling)	a, b	Heater-cathode leakage								
			Ehk = ∠100 Vdc	---	---	---	---	Ihk	---	50	uAdc
			Ehk = -100 Vdc					Ihk	---	50	uAdc
4.11.3.1(a)	Stability life test	a, b	Rk = 125; Rg/g = 1.0 Meg; Ehk = ∠300 V; TA = room (see note 15)	1.0	Code I	---	---	---	---	---	---

PAR NO	TEST	TEST CODE	CONDITIONS	AQL (PERCENT DEFECTIVE)	INSPECTION LEVEL OR CODE	ALLOWABLE DEFECTIVES PER CHARACTERISTIC		SYMBOL	LIMITS		UNIT
						First sample	Combined samples		Min	Max	
	Acceptance inspection, part 3 (life) (see note 12) - Contd										
4.11.4	Life-test end points (stability) (1 hour)	a, b	Change in transconductance (1) of individual tubes	---	---	---	---	ΔSm_t	---	10	%
4.11.3.1 (b)	Survival-rate life test	a, b	Stability life-test conditions, or equivalent (see notes 16 and 17)	---	II	---	---	---	---	---	---
4.11.4	Life-test end points (survival rate) (100 hours)	a, b	Inoperatives Transconductance (1)	0.65 1.0	--- ---	--- ---	--- ---	--- Sm	--- 5,800	--- ---	--- umhos
4.11.5	Intermittent life-test operation	a, b	Stability life-test conditions; TE = 230° C min (see notes 18 and 19)	---	---	---	---	---	---	---	---
4.11.4	Life-test end points (intermittent) (1,000 hours)	a, b	(See note 20)								
		a, b	Inoperatives (see note 21)	---	---	1	3	---	---	---	---
		a, b	Grid current	---	---	1	3	Ic	0	-10	uAdc
		a, b	Transconductance (2)	---	---	1	3	ΔSm_{Ef}	---	10	%
		a, b	Combined defectives	---	---	2	5	---	---	---	---
		a, b	Heater-cathode leakage								
			Ehk = +100 Vdc	---	---	1	3	Ihk	---	25	uAdc
			Ehk = -100 Vdc	---	---	1	3	Ihk	---	25	uAdc
		a	Heater current	---	---	1	3	If	2.35	2.75	A
		b	Heater current	---	---	1	3	If	0.550	0.665	A
		a, b	Transconductance (1)	---	---	1	3	Sm	5,500	---	umhos
		a, b	Insulation of electrodes								
			g to all					R	100	---	Meg
			p to all	---	---	1	3	R	100	---	Meg
		a, b	Combined defectives	---	---	3	6	---	---	---	---
4.9.18 and 4.9.18.1.1	Container drop		Required								
5.	Preparation for delivery		(See note 22)								

NOTES:

1. Maximum grid-circuit resistance:
   a. 1.0 megohm for cathode-bias operation.
   b. 0.1 megohm for fixed-bias operation.
   c. 0.1 megohm for combined fixed- and cathode-bias operation.
2. Variable sampling procedures. See 4.1.1.2.7.

NOTES:

3. For purposes of acceptance inspection, use applicable reliable paragraphs.

4. In addition to the paragraphs specified hereon, the following tests and requirements listed in 3.6 shall apply: 3.3, 3.3.1, 3.4.1, 3.4.2, 3.7, 3.7.7, 3.8, 4.1, 4.3, 4.4, 4.5, 4.6, 4.7, 4.9.2, 4.9.3, 4.9.4, 4.9.5, 4.9.5.1, 4.9.8, 4.9.20.1, 4.9.20.2, and 4.9.21.

5. All tests listed hereon shall be performed during qualification inspection; however, these tests are normally performed during qualification inspection only.

6. Tie k1 to k2; g1 to g2; and p1 to p2.

7. The AQL for the combined defectives for attributes in acceptance inspection, part 1 (production), excluding inoperatives and mechanical, shall be 1 percent.

8. Test each unit separately.

9. Both units shall be operating.

10. With both units operating, Ic is the sum of I1c and I2c.

11. This test shall be performed on the initial lot and thereafter on a lot approximately every 30 days. When one lot has passed the 30-day rule shall apply. In the event of lot failure, the lot shall be rejected and the suceeding lots shall be subjected to this test until a lot passes. Standard MIL-STD-105, sample size code letter F, shall apply.

12. Destructive tests. Tubes subjected to the following destructive tests are not to be delivered on contract or order:

4.9.20.5	Shock test.
4.9.20.6	Fatigue test.
4.11.5	Intermittent life-test operation.
4.11.7	Heater-cycling life test.

13. A grid resistor of 0.1 megohm shall be added; however, this resistor shall not be used when a thyratron-type short indicator is employed.

14. The no-load to steady-state full-load regulation of the heater-voltage supply shall be not more than 3.0 percent. This test shall be made on a lot-by-lot basis.

15. Stability life test. See 20.2.5.1 of appendix C.

16. Survival-rate life test. See 20.2.5.2 to 20.2.5.2.4, inclusive, of appendix C.

17. Equivalent conditions for survival-rate life test. See 20.2.5.2.5 of appendix C.

18. Intermittent life test. See 20.2.5.3 of appendix C.

19. Envelope temperature is defined as the highest temperature indicated when using a thermocouple of No. 40 B&S or smaller diameter elements placed in contact with the envelope. Envelope temperature requirement will be satisfied if a tube, having bogey Ib (±5 percent) under normal test conditions, is determined to operate at or above the minimum specified temperature at any position on the life-test rack.

20. Order for evaluation of life-test defects. See 4.11.3.1.2.

21. An inoperative, as referenced in life test, is defined as a tube having one or more of the following defects: discontinuity, permanent shorts, or air leaks. (See 4.7.5.)

22. Tubes shall be packaged and packed, as specified in the contract or order, in accordance with Specification MIL-E-75. Package group MIL-E-75/1, package size F, and rough handling test (d) shall apply.

23. Referenced documents shall be of the issue in effect on the date of invitation for bids.

Custodians:
Army - SigC
Navy - Ships
Air Force - WADD

Preparing activity:
Navy - Ships
(Project 5960-1250)

CV 5008

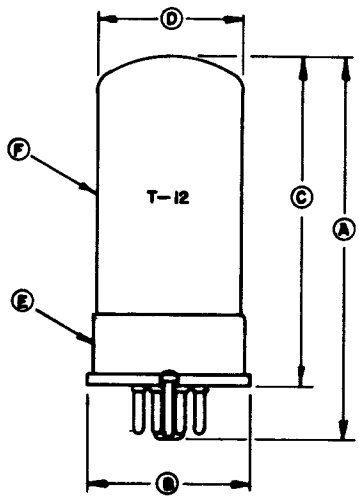

PIN CONNECTIONS

Pin No.	Element
1	g2
2	p2
3	k2
4	g1
5	p1
6	k1
7	h
8	h

DIM.	AQL (PERCENT DEFECTIVE)	INSPECTION LEVEL	LIMITS	
			Min	Max
QUALIFICATION INSPECTION				
E	Base: B8-98			
F	Envelope: T-12			
ACCEPTANCE INSPECTION, PART 2 (DESIGN)				
A	6.5	L6	---	4.063
B	6.5	L6	---	1.719 dia
C	6.5	L6	3.125	3.500
D	6.5	L6	1.438 dia	1.563 dia

ALL DIMENSIONS IN INCHES.

Figure 1. Outline drawing.

VALVE ELECTRONIC

SERVICES VALVE TEST LABORATORY

CV 5018

Specification AD/CV.5018 incorporating MIL-E-1/800B Issue No. 2 dated 4.8.61. To be read in conjunction with K.1006.	SECURITY	
	SPECN.	VALVE
	Unclassified	Unclassified

TYPE OF VALVE	Magnetron, pulsed, fixed frequency and integral magnet.
CATHODE	Indirectly heated
ENVELOPE	Metal-glass
PROTOTYPE	4J52A

MARKING

See K.1001/4

Additional marking 4J52A

RATINGS			NOTE
Heater voltage nominal	(V)	12.6	A
Heater current nominal	(A)	2.2	
Operating frequency nominal	(Mc/s)	9345 to 9405	
Max. pulse voltage	(kV)	16	
Max. pulse current	(A)	15	
Max. mean input power	(W)	240	B
Max. pulse length	(μS)	5.0	
Max. frequency pulling	(Mc/s)	13	

CONNECTIONS

See drawing on page 5.

DIMENSIONS

See drawing on page 5.

MOUNTING POSITION

Any

NOTES

A. For warm-up time and heater voltage on standby and during operation see Note 4 on page 3.

B. Sufficient cooling air (e.g. 15 cu. ft./min. at N.T.P.) shall be directed at the cooling fins to prevent the anode temperature exceeding 100°C.

CV 5018

MIL-E-1/800B
23 August 1955
SUPERSEDING
MIL-E-1/800A
5 April 1955

INDIVIDUAL MILITARY SPECIFICATION SHEET

ELECTRON TUBE, MAGNETRON, PULSE

JAN-4J52A

This specification sheet forms a part of the latest issue of Military Specification MIL-E-1.

Description: Magnetron, Pulse, 9375Mc Nominal Fixed Frequency, 70kw Nominal Peak Power Output, Permanent Magnet, Air Cooled

Ratings: Parameter / Units	(Note 1) Ef (Note 4) V	if a	tk sec	Anode T °C	VSWR	Altitude mm Hg	Cathode Bushing T °C
Absolute Maximum:	14	10 (surge)	---	150	1.5:1	---	175
Minimum:	---	---	90	-55 Note 5	---	500	-55 Note 5

Design Ratings: Parameter / Units	(Note 2) Ef	ib a	Pi Watts	tp us	Storage Ambient °C
Maximum:	Note 4	15	240	5.0	+85
Minimum:	Note 4	12	---	---	-55

tp us	rrv (Note 3) kv/us	
Min.	Min.	Max.
0.4	120	180
1.0	100	150
4.5	70	100

The following tests shall be performed.
For the purposes of inspection, use applicable paragraphs of MIL-E-1 and Inspection Instructions for Electron Tubes.
For miscellaneous requirements, see Paragraph 3.3, Inspection Instructions for Electron Tubes.

Ref.	Test	Conditions	AQL(%)	Insp. Level or Code	Sym.	LIMITS Min.	LAL	Bogie	UAL	Max.	ALD	Units
	Qualification Approval Tests											
3.1	Qualification Approval:	Required for JAN Marking	---	---	---	---	---	---	---	---	---	
---	Vibration:	Osc. (1):G=10:F=50 to 500; varied over complete range in not less than 5 minutes at uniform rate, Note 18	---	---	ΔF:	---	---	---	---	±0.5	---	Mc
---	Shock:	No voltages; 50G;4ms duration, Note 6	---	---		---	---	---	---	---	---	
---	Input Capacitance:	Measured between cathode terminal and mounting plate	---	---	Cin:	10.0	---	---	---	14.0	---	uuf
---	Phase of Sink:	Osc(1); Note 12	---	---	Dist:	0.26	---	---	---	0.40	---	λg
4.9.14	Temperature Coefficient:	Osc(1);Anode Temp=70° to 100°C at reference point	---	---	ΔF/Δ°C:	---	---	---	---	0.25	---	Mc/°C
4.9.15	Low Temperature Operation:	Osc(1);tk=90(max)	---	---		---	---	---	---	---	---	
		Stability, Note 11	---	---	M.P.:	---	---	---	---	1	---	%
		Stability, Note 19	---	---	M.P.:	---	---	---	---	5	---	%
4.16.1	Air Cooling:	Osc(1); Note 13	---	---	Δ T:	---	---	---	---	50	---	°C
4.9.12	Low Pressure Operation:	Osc. (2);Pressure 500mm Hg Absolute; Note 16	---	---		---	---	---	---	---	---	
	Measurements Acceptance Tests Part 1 (Note 21)		(Generally considered as Production Tests)									
4.5	Holding Period:	t=168 hours	---	---		---	---	---	---	---	---	
4.9.2	Dimensions:	Per Outline	---	---		---	---	---	---	---	---	
4.9.13	Pressurizing:	40-45 p.s.i. absolute; input and output assemblies	.65	II		---	---	---	---	---	---	
4.10.8	Heater Current:	Ef=12.6V;tk=180 (min.)	.65	II	If:	2.0	---	---	---	2.4	---	A

CV 5018

Ref.	Test	Conditions	AQL(%)	Insp. Level or Code	Sym.	LIMITS Min.	LAL	Bogie	UAL	Max.	ALD	Units
4.16.3	Oscillation (1):	Notes 4, 7 and 8										
4.16.3.2	Heater:	Ef=12.6V for tk=90 (max.);Ef=9.1V for test	---	---	---	---	---	---	---	---	---	
4.16.3.3	Pulse Characteristics:	tp=0.4±0.05; Du=0.00065;rrv=170±15 kv/us; Note 3	---	---	---	---	---	---	---	---	---	
4.16.3.4	Average Anode Current:	Ib=9.8mAdc	---	---	---	---	---	---	---	---	---	
4.16.3.7	Spectrum Measurements:	Measurements shall be made at 11a and 15a; Notes 9 and 10	.65	II	---	---	---	---	---	---	---	
	Minor Lobes:		.65	II	Ratio:	8.0	---	---	---	---	---	db
	R. F. Bandwidth:		.65	II	ΔF:	---	---	---	---	2.0/tp	---	Mc
---	Stability:	Note 11	.65	II	M.P.:	---	---	---	---	0.25	---	%
4.16.5	Pulling Factor:		.65	II	ΔF:	---	---	---	---	13.0	---	Mc
4.16.3	Oscillation (2):											
4.16.3.2	Heater:	Ef=12.6V for tk=90 (max.);Ef=7.9V for test	---	---	---	---	---	---	---	---	---	
4.16.3.3	Pulse Characteristics:	tp=5.0±0.5us;Du=0.001; rrv=110±10 kv/us; Note 3	---	---	---	---	---	---	---	---	---	
4.16.3.4	Average Anode Current:	Ib=15mAdc	---	---	---	---	---	---	---	---	---	
4.10.7.3	Frequency:	Anode Temp. at reference point = 100±10°C	.65	II	F:	9350	---	---	---	9400	---	Mc
4.16.3.5	Pulse Voltage:		.65	II	epy:	14	---	---	---	16	---	kv
4.16.3.6.1	Power Output:	within t=100	.65	II	Po:	70	---	---	---	---	---	W
4.16.3.7	Spectrum Measurements:	Measurements shall be made at 12a & 15a; Notes 9 and 10	.65	II	---	---	---	---	---	---	---	
	Minor Lobes:		.65	II	Ratio:	6.0	---	---	---	---	---	db
	R. F. Bandwidth:		.65	II	ΔF:	---	---	---	---	2.5/tp	---	Mc
4.16.6	Pushing Factor:	Ib=12a to 15a	.65	II	ΔF:	---	---	---	---	0.5	---	Mc/amp
---	†Stability (1):	Notes 11 and 14	.65	II	M.P.:	---	---	---	---	0.25	---	%
	Measurements Acceptance Tests Part 2	(Generally considered as Design Tests)										
---	Vibration:	Heater voltage only; G=15;F=60;duration 15 minutes;No heater-cathode or cathode-anode shorts during test; Note 18	6.5	IA	---	---	---	---	---	---	---	
	†Shelf Life:	t=90 days;Osc(2);Note 20	---	---	---	---	---	---	---	---	---	
	Stability: Note 11		6.5	IA	M.P.:	---	---	---	---	0.5	---	%
	Stability: Note 19		6.5	IA	M.P.:	---	---	---	---	10	---	%
---	Stability (2):	Osc(2);rrv=60±10kv/us; Note 11	6.5	IA	M.P.:	---	---	---	---	0.25	---	%

Ref.	Test	Conditions	AQL(%)	Insp. Level or Code	Allowable Defectives per Characteristic		Sym	Limits		Units
					1st Sample	Combined Samples		Min.	Max.	
	Acceptance Life Tests									
4.11	Cycling Life Test:	Group D; VSWR=1.5 min. with phase varying thru a minimum of 1/2 λ approx every 15 min.; Note 15 Cond. Ib Ef Duration Standby --- 12.6V 3 min. Osc(1) 9.8mA 9.1V 3 min. Osc(2) 15.0mA 7.9V 15 min. Off --- 0 9 min. (minimum)	---	---	---	---	Cy:	833	---	Cycles
4.11.4	Cycling Life Test End Point:									
	Power Output:	Oscillation (2)	---	---	---	---	Po:	56	---	W
	Frequency:	Oscillation (2)	---	---	---	---	F:	9345	9405	Mc
	Minor Lobes:	Oscillation (2) Notes 9, 10 and 17	---	---	---	---	Ratio:	6	---	db
	R. F. Bandwidth:	Oscillation (2) Notes 9, 10 and 17	---	---	---	---	ΔF:	---	2.5/tp	
	Stability:	Oscillation (1) & (2) Notes 11 & 17	---	---	---	---	M.P.:	---	2	%
	Packaging Information									
4.9.18.1.8	Carton Drop:	(1) Package Group 9; Carton Size D								

Note 1: These ratings shall not be used simultaneously and no individual rating shall be exceeded.

Note 2: To relate the various parameters, the following formula shall be employed:

$$Pi = Ib \times Du \times 15000$$

Note 3: The rate of rise of voltage (rrv) shall be expressed in kilovolts per micro-second defined by the steepest tangent to the leading edge of the voltage pulse above 80 percent amplitude. Any capacitance used in viewing system shall not exceed 6.0 uuf.

Note 4: Prior to the application of high voltage, the cathode shall be heated to the required initial operating temperature. This shall be done by applying 12.6 volts for 3 minutes. On standby, the heater voltage shall not exceed 12.6 volts. On the application of anode power, the heater voltage shall be lowered to the voltage specified, and for various power inputs, it shall be adjusted approximately (within 5 percent) according to the following formula:

$$Ef = 11.6 \text{ minus } 0.017 \text{ Pi}$$

The tube heater shall be protected against arcing by the use of a connector that pl[illegible] a minimum capacitance of 4000 uuf across the heater directly at the input terminals.

Note 5: Temperature shall be measured at the point shown on outline Draw[illegible]

Note 6: (a) This test shall be performed on the Naval Research Laboratory's Standard Shock Machine for Electronic Devices. A resilient cushion (see note 6 (b)) shall be interposed between hammer and anvil of table and a suitable hammer angle selected to produce a shock of the specified magnitude and dura[illegible] (see note 6 (c)). The mounting plate of the tube shall be bolted with brass bolts to either the table or the standard angle bracket, depending upon the direction of the desired shock, using a 1-9/16-inch thick brass spacer between the tube mounting plate and the table or angle bracket. The shock shall be measured on the brass spacer. The tube shall be given one shock in each of the following directions:

(1) Parellel to cathode, with cathode terminals pointing away from the hammer.

(2) Perpendicular to cathode axis and output waveguide axis.

(3) Perpendicular to cathode axis and parallel to the output waveguide axis.

(b) A resilient cushion consisting of 9/32-inch thick rubber sheet of thirty Shore Durometer hardness, covering the entire anvil of the table, has been found to produce the specified stock duration under the given conditions of table load and shock magnitude.

(c) Because of the varying resilience of the tube on its mounting plate with different shock directions and the high ratio of tube to table weight, the hammer angle will vary with the tube orientation to produce the required magnitude of shock.

(d) Criteria for passing shock test: After the shock test, the tube shall show no mechanical failure and shall meet all electrical requirements of the tube specification sheet with the exception of life tests.

Note 7: The modulator shall be such that the energy per pulse delivered to the tube, if arcing occurs, shall not greatly exceed the normal energy per pulse.

CV 5018

Note 8: The load termination of the magnetron during this test shall be a waveguide line with a VSWR of less than 1.05:1, except where specifically noted, herein.

Note 9: The tube shall be operated into a transmission line with a VSWR of 1.5:1 adjusted in phase to produce maximum spectrum degradation.

Note 10: A suitable spectrum shall be considered one in which the major lobe has a shape such that its slope does not change sign more than one for power levels greater than the specified db below its peak.

Note 11: Stability shall be measured in terms of the average number of output pulses missing, expressed as a percent of the number of input pulses applied during the period of observation. The missing pulses (M.P.), due to any causes, are considered to be "missing" if the r.f. energy is less than 70 percent of the normal energy level in the frequency range of 9330 to 9425 megacycles. The VSWR of Note 9 shall be adjusted to that phase producing maximum instability and the missing pulses counted during any consecutive 5-minute interval of a 10-minute test period.

Note 12: Using a standard cold test technique, the phase of sink as measured from the output flange to the first minimum, toward the load, shall be within the limits specified herein.

Note 13: An air flow of 15 c.f.m. at approximately 760 mm Hg shall be directed on the cooling fins from an orifice of 2-1/2 by 1-3/16 inches. The temperature rise shall be measured at that point on the anode block as shown on outline drawing.

Note 14: This test shall be the first one performed after the specified holding period.

Note 15: Air cooling shall be adjusted so that the anode block runs at 150°C or at the maximum temperature it will reach in the absence of cooling, whichever is lower. This shall be adjusted during the Oscillation (2) portion of the cycle.

Note 16: The tube shall be operated in a transmission line with a load VSWR of 1.5:1 and variable phase. At specified pressure, there shall be no evidence of breakdown at either the input or output assemblies.

Note 17: If during life test the tube does not meet the specified limits, it shall be recycled for an additional five cycles. At such time, the tests shall be repeated. Should the tube fail the second test, it shall be considered unsatisfactory.

Note 18: Direction of vibration shall be in a plane perpendicular to the axis of the cathode.

Note 19: Stability shall be measured in terms of the average number of output pulses missing, expressed as a percent of the number of input pulses applied during the period of observation. The missing pulses (M.P.), due to any causes, are considered to be "missing" if the r.f. energy is less than 70 percent of the normal energy level in the frequency range of 9330 to 9425 megacycles. The VSWR of note 9 shall be adjusted to that phase producing maximum instability and the missing pulses counted during the first minute of operation.

Note 20: This test shall be performed on four tubes per month when tube is in continuous production, but shipments of that month's production shall not be held pending completion of the test. So long as three of the four tubes for each of the first three months of a production run pass the test and 75 percent of the cumulative quantity of tubes tested pass the test, tubes shall be considered to conform to this specification. If either of the conditions are not met, shipments shall be halted until three of four tubes of current production conform to test.

Note 21: The AQL for the combined defectives for attributes in Measurements Acceptance Tests, Part 1, excluding Inoperatives and Mechanical shall be one (1) percent. A tube having one or more defects shall be counted as one (1) defective. MIL-STD-105, Inspection Level II shall apply.

Note 22: Reference specification shall be of the issue in effect on the date of invitation for bid.

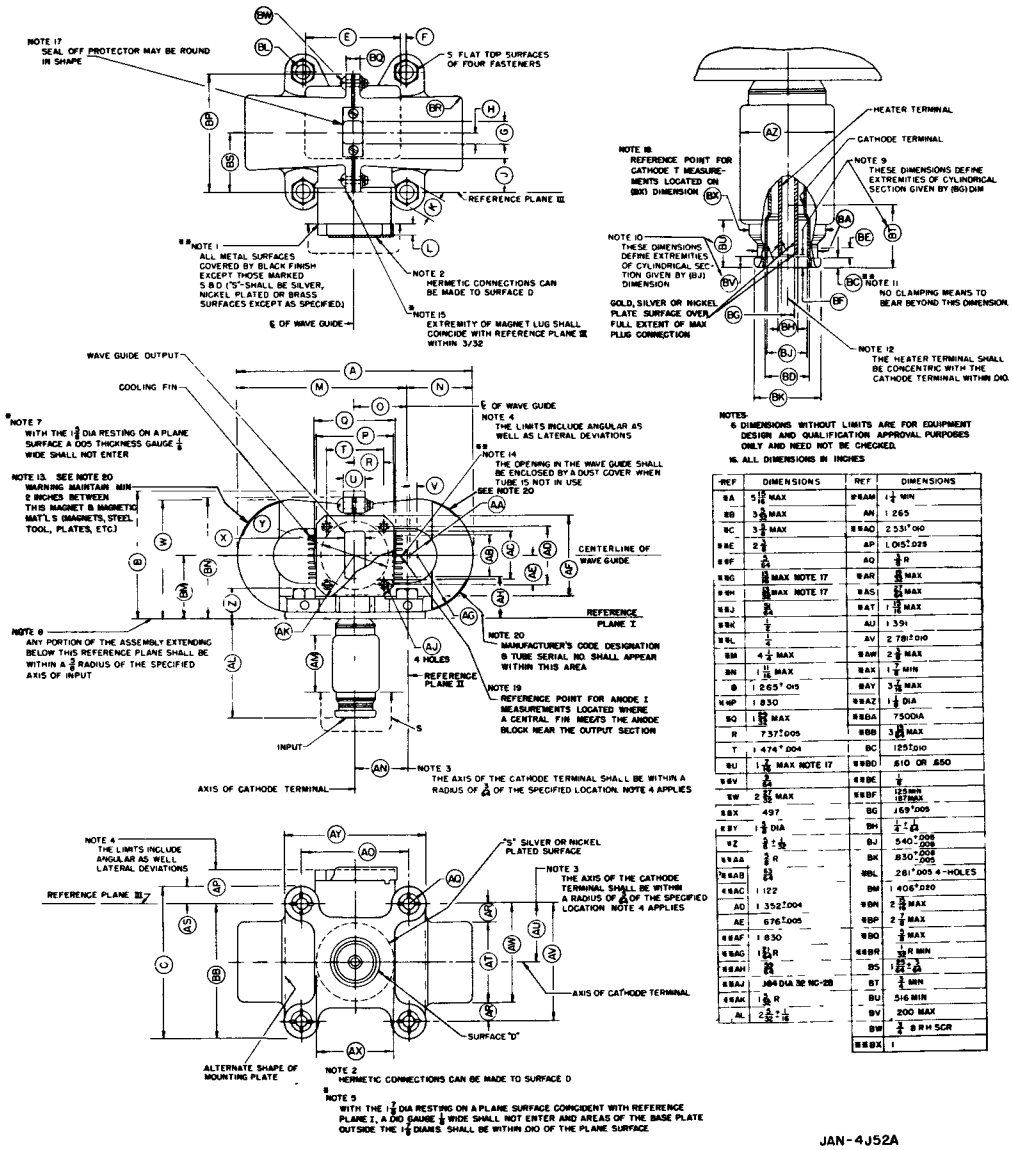

NOTES:
6 DIMENSIONS WITHOUT LIMITS ARE FOR EQUIPMENT DESIGN AND QUALIFICATION APPROVAL PURPOSES ONLY AND NEED NOT BE CHECKED.
16. ALL DIMENSIONS IN INCHES

REF	DIMENSIONS	REF	DIMENSIONS
BA	5 13/16 MAX	BRAM	1 1/4 MIN
BB	3 3/32 MAX	AN	1.265
BC	3 1/2 MAX	BAO	2.531±.010
BE	2 1/2	AP	1.065±.029
BF	3/64	AQ	1/8 R
BG	15/16 MAX NOTE 17	BAR	5/8 MAX
BH	15/16 MAX NOTE 17	BAS	5/8 MAX
BJ	3/64	BAT	1 13/16 MAX
BK	1/2	AU	1.391
BL	1/4	AV	2.781±.010
BM	4 1/4 MAX	BAW	2 1/2 MAX
BN	1 11/16 MAX	BAX	1 1/2 MIN
Ø	1.265±.015	BAY	3 1/4 MAX
NP	1.830	BAZ	1 1/4 DIA
BQ	1 15/16 MAX	BBA	7500A
R	737±.005	BBB	3 3/4 MAX
T	1.474±.004	BC	125±.010
BU	1 1/16 MAX NOTE 17	BBD	#10 OR #50
BV	3/4	BE	1/4
BW	2 27/32 MAX	BBF	.123 MIN .187 MAX
BX	497	BG	.969±.005
BY	1 1/2 DIA	BH	1 1/2
BZ	2 1/2	BJ	540 +.005 -.005
BAA	3/8 R	BK	830 +.005 -.005
BAB	3/4	BBL	.281±.005 4-HOLES
AC	1.122	BM	1.406±.020
AD	1.352±.004	BBN	2 3/32 MAX
AE	676±.005	BBP	2 1/2 MAX
AF	1.830	BBQ	3/4 MAX
AG	1 1/2 R	BBR	1/16 R MIN
AH	3/4	BS	1 25/32
BAJ	.164 DIA 32 NC-2B	BT	1/4 MIN
AK	1/16 R	BU	.516 MIN
AL	2 25/32	BV	.200 MAX
		BW	3/8 R MM SCR
		BBX	1

JAN-4J52A

Z.21790

MINISTRY OF SUPPLY, R.R.E. VALVE ELECTRONIC **CV 5035**

Specification MOS/CV 5035 incorporating MIL-E-1/689B Issue 1 dated 24.4.58. To be read in conjunction with K.1006	SECURITY	
	Specification	Valve
	Unclassified	Unclassified

TYPE OF VALVE - Cathode ray tube (with P.D.A.)

TYPE OF DEFLECTION - Electrostatic Symmetrical

TYPE OF LOCUS - Electrostatic

BULB - Glass

SCREEN - GG4

PROTOTYPE - 5ADP1

MARKING

See K1001/4

Add:- 5ADP1 Serial No. ...

BASE

B.S. 448 B.14A

RATING

Heater Voltage	(V)	6.3
Heater Current	(A)	0.6
Max. Va1 and Va3	(kV)	2.85
Max. Va2	(kV)	1.1
Max. Va4	(kV)	6.6

TYPICAL OPERATING CONDITIONS

Va 1 and 3	(kV)	1.5
Va 2	(kV)	0.45
Va 3	(kV)	3.0
Sensitivity, x plates	(mm/V)	0.75
Sensitivity, y plates	(mm/V)	0.93

CONNECTIONS

Pin	Electrode
1	h
2	k
3	g
4	internal connection
5	a2
6	no ~~connection~~ pin
7	y1
8	y2
9	a1 and a3
10	x2
11	x1
12	~~no~~ no connection
13	no ~~connection~~ pin
14	h
SIDE CONTACT	a4

DIMENSIONS

See drawing on page 4

SIDE CONTACT

B.S. 448 - C.T. 7

NOTES

Z.17061.R.

CV5035

MIL-E-1/689B
23 June 1955
SUPERSEDING
MIL-E-1/689A
18 October 1954

INDIVIDUAL MILITARY SPECIFICATION SHEET

ELECTRON TUBE, CATHODE RAY, ELECTROSTATIC DEFLECTION AND FOCUS

JAN-5ADP1, 5ADP2, 5ADP7

This specification sheet forms a part of the latest issue of Military Specification MIL-E-1.

Ratings: Absolute	Type Phosphor	Ef V	Ecl Vdc	ed Vdc	Eb1 Vdc	Eb2 Vdc	Eb3 Vdc	Rg Meg	Zd Meg	Eb3/Eb2 Ratio	Ehk Vdc	Alt
Maximum:	All	6.3±10%	0	550	1100	2850	6600	1.5	1.0	2.3	±180	gnd.
Minimum:	P1	---	-200	---	---	1500	1500	---	---	---	---	
	P2, P7	---	-200	---	---	1500	3000	---	---	---	---	
Test Cond:	P1	6.3	Adjust		Focus	1500	3000	---	---	---	---	
	P2, P7	6.3	Adjust		Focus	2000	4000	---	---	---	---	

Fluorescent Color: Per phosphor **Persistence: Per phosphor P1 (P2, Note 1)

For miscellaneous requirements, see Par. 3.3, Inspection Instructions for Electron Tubes.

Ref.	Test	Type Phosphor	Conditions		Min.	Max.	
3.1	Qualification Approval:	All	Required for JAN Marking				
4.9.2.1	Dimensions:	All					
4.6.1	Preheating:	All					
4.5	Holding Period:	All					
4.9.18.1.2	Carton Drop:		(i) Package Group 4; Carton Size C				
4.10.8	*Heater Current:	All		If:	540	660	mA
4.12.1.1	*Anode No. 1 Current:	All	Ecl=0	Ib1:	-15	10	uAdc
4.12.1.1	*Cathode Current:	P1	Light=15 ft.L.	Ik:	---	1000	uAdc
		P2, P7	Ib3=50uAdc	Ik:	---	1000	uAdc
4.12.1.2	Voltage Breakdown:	All					
4.12.1.3	Voltage Breakdown:	All					
4.12.2.1	† Gas "Cross":	P1	Light=15 ft.L.				
		P2, P7	Ib3=50uAdc				
4.12.3.1	*Alinement, Base:	All	ID2, Pin No. 5				
4.12.3.2	*Alinement, Side Terminal	All	ID2				
4.12.3.7	*Angle Between Traces:	All			89	91	deg.
4.12.3.4	**Alinement, Neck & Bulb:	All		Diam:	---	2.25	in.
4.12.3.5	*Alinement, Neck & Base:	All					
4.12.4.1	**Cathode Illumination:	All					
4.12.4.2	*Stray Emission:	All	Eb2=2850Vdc; Eb3=6600Vdc				
4.12.5.1	Blemishes:	All					

CV5035

Ref.	Test	Type Phosphor	Conditions		Min.	Max.	
4.12.5.2	† Light Output:	P1		Light:	15	—	ft.L.
4.12.5.3	*Modulation:	P1	Light=15 ft.L.	Δ Ec:	—	45	Vdc
4.12.5.3	Modulation:	P2, P7	Ib3=50uAdc	Δ Ec:	—	55	Vdc
4.12.5.4	*Screen:	P7	Note 2				
4.12.6.1	*Line Width "A":	P1	Light=15 ft.L.	Width:	—	0.75	mm
		P2, P7	Ib3=50uAdc	Width:	—	0.8	mm
4.12.6.1	*Line Width "B":	P1	Light=15 ft.L.; Note 4	Width:	—	0.80	mm
		P2, P7	Ib3=50uAdc	Width:	—	0.90	mm
4.12.7.2	Spot Position:	All			—	16	mm
4.12.7.3	Spot Displacement:	All		Displ:	—	10	mm
4.12.9	Grid Cutoff Voltage:	P1		Eco:	-34	-56	Vdc
		P2, P7		Eco:	-45	-75	Vdc
4.12.10.1	*Focusing Voltage:	P1		Eb1:	345	515	Vdc
		P2, P7		Eb1:	460	690	Vdc
4.12.10.2	**Focusing Voltage:	P1		Eb1:	300	515	Vdc
		P2, P7		Eb1:	400	690	Vdc
4.12.11	*Deflection Factor:	P1	1D2	DF:	40	50	Vdc/in.
		P2, P7	1D2	DF:	54	66	Vdc/in.
4.12.11	*Deflection Factor:	P1	3D4	DF:	30.5	37.5	Vdc/in.
		P2, P7	3D4	DF:	40.5	50	Vdc/in. ◄—
4.12.11	**Deflection Factor:	P1	1D2;Eb2=Eb3=1500Vdc	DF:	32.5	39.5	Vdc/in. ◄—
		P2, P7	1D2:Eb2=Eb3=2000Vdc	DF:	43	53	Vdc/in.
4.12.11	**Deflection Factor:	P1	3D4;Eb2=Eb3=1500Vdc	DF:	24.5	30.5	Vdc/in. ◄—
		P2, P7	3D4;Eb2=Eb3=2000Vdc	DF:	32.5	40.5	Vdc/in. ◄—
4.12.12	**Deflection Factor Uniformity:	All			—	2	%
4.12.13.1	*Heater-Cathode Leakage:	All					
4.12.13.2	Grid No. 1 Leakage:	All					
4.12.13.5	Anode No. 2 Leakage:	All					
4.10.14	**Capacitance:	All	G1 to all	C:	—	7.9	uuf
			K to all	C:	—	5.8	uuf
			D1 to D2	C:	—	3.1	uuf
			D3 to D4	C:	—	1.3	uuf
			D1 to all except D2	C:	—	6.1	uuf
			D2 to all except D1	C:	—	6.1	uuf
			D3 to all except D4	C:	—	5.0	uuf
			D4 to all except D3	C:	—	5.0	uuf
4.9.11	**Pressure:	All	45 lb/sq.in.				
4.9.19.8	**Vibration:	All		Width:	—	1	mm
4.11.2	Life Test:	All	Group C; Eb2=2850Vdc; Eb3=6600Vdc	t:	500	—	hrs.
		P1	Light=15 ft.L.				
		P2, P7	Ib3=30uAdc				

Ref.	Test	Type Phosphor	Conditions		Min.	Max.	
4.11.4	Life Test End Point:	P1	Light=11 ft.L.				
			Line Width "A"	Width:	—	.75	mm
			Line Width "B"	Width:	—	.85	mm
			Modulation	Δ Ec:	—	45	Vdc
		P2, P7	Ib3=37.5uAdc				
			Line Width "A"	Width:	—	.8	mm
			Line Width "B"	Width:	—	.9	mm
			Modulation	Δ Ec:	—	55	Vdc
4.9.5.1	*Torque:	All					
—	Total Scan:	P1	Focused Trace; Light=15 ft.L;Note 5		4¼	—	in.
		P2, P7	Focused Trace; Ib3=50uAdc;Note 5		4¼	—	in.
—	Pattern Distortion:	All	Note 3				

Note 1: Persistence is specified as the cbl value as measured for P7 screens (Radiation Laboratory Report No. 62-7, pp. 24, 25, dated 14 May 1943) at a Q of 20, corrected for an area of 50 sq. cm. to make the readings obtained comparable with the cbl value for P7 screens under the standard reference conditions. The cbl value shall not be less than 370 cb.

Note 2: See Final Report of Naval Material Laboratory on Lab. Project 5032-11.2, Part 1, 26 June 1952; Primary Replica Standard for P7 Screens.

Note 3: With a raster pattern the size of which is adjusted so that the widest points of the pattern just touch the sides of a square, 3.075 inches on a side, no point on these pattern sides will lie within an inscribed square, 2.925 inches on a side.

Note 4: Measure Line Width "B" at a distance from the center of the screen equal to 1/3 of the maximum bulb diameter. The applied astigmatism voltage shall be equal to zero volts.

Note 5: ±2 1/8 inches scan from tube face centers to extinction points of focused trace.

Note 6: Reference specification shall be of the issue in effect on the date of invitation for bid.

CV5035

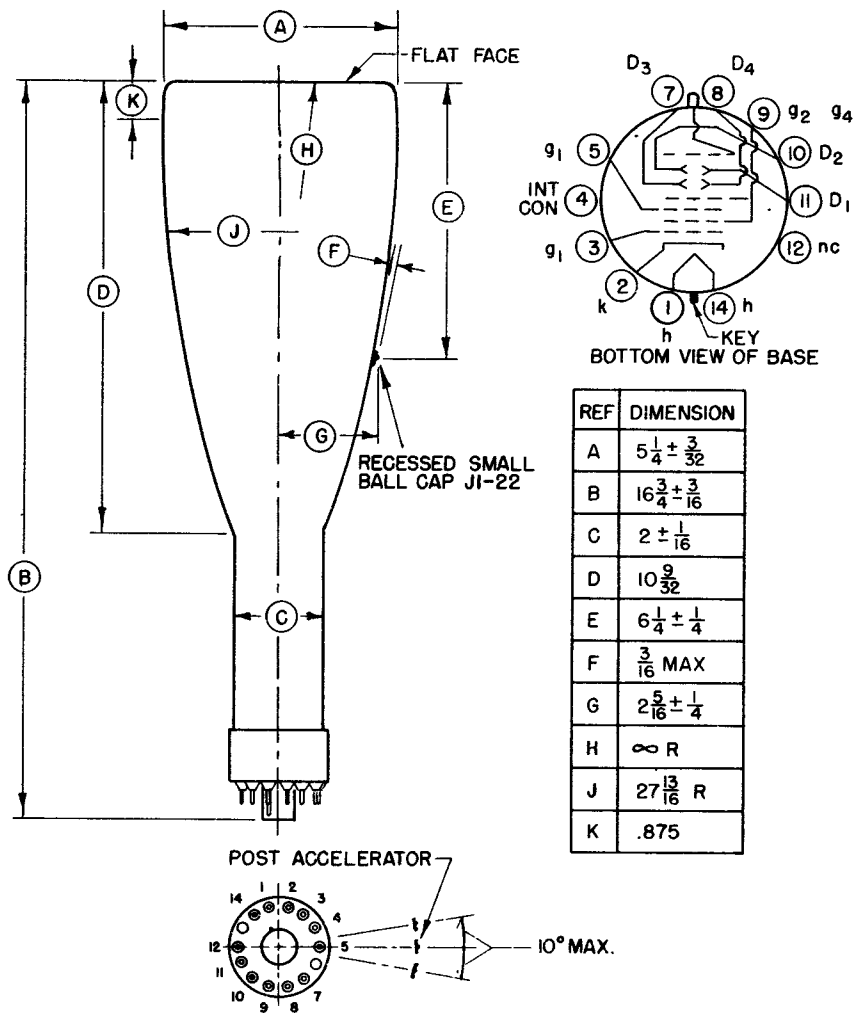

REF	DIMENSION
A	$5\frac{1}{4} \pm \frac{3}{32}$
B	$16\frac{3}{4} \pm \frac{3}{16}$
C	$2 \pm \frac{1}{16}$
D	$10\frac{9}{32}$
E	$6\frac{1}{4} \pm \frac{1}{4}$
F	$\frac{3}{16}$ MAX
G	$2\frac{5}{16} \pm \frac{1}{4}$
H	∞ R
J	$27\frac{13}{16}$ R
K	.875

Note 1: The minimum useful screen diameter shall not be less than 2-1/4 inches.

Note 2: The bulb shall be type J42K.

Note 3: The base shall be a medium shell diheptal 12-pin (B12-37) base.

VALVE ELECTRONIC

ADMIRALTY SURFACE WEAPONS ESTABLISHMENT

CV5125

Specification AD/CV5125 incorporating MIL- Issue 1 Dated 1.10.63 E-1/689C To be read in conjunction with BS448 K1001 and K1006	SECURITY SPECIFICATION: Unclassified VALVE: Unclassified

TYPE OF VALVE - Cathode ray tube
DEFLECTION - Electrostatic, symmetrical
FOCUS - Electrostatic
ENVELOPE - Glass
SCREEN - BY8
PROTOTYPE - 5ADP7

MARKING

See K1001/4
Add:- 5ADP7 Serial No. .....

BASE

BS448 - B14A

RATINGS

			Note
Heater Voltage	(V)	6.3	
Heater Current	(A)	0.6	
Anodes 1 and 3 Voltage Max.	(kV)	2.85	
Anode 2 Voltage Max.	(kV)	1.1	
Anode 4 Voltage Max.	(kV)	6.6	

TYPICAL OPERATING CONDITIONS

Anodes 1 and 3 Voltage	(kV)	2.0
Anode 2 Voltage	(kV)	0.45
Anode 4 Voltage	(kV)	4.0
Sensitivity, x plates	(mm/V)	0.4
Sensitivity, y plates	(mm/V)	0.55

SIDE CONTACT

BS448 - CT7

CONNECTIONS

Pin	Electrode	
1	Heater	h
2	Cathode	K
3	Grid	g
4	Internal connection	-
5	Anode 2	a2
6	No pin	-
7	y1 Plate	y1
8	y2 Plate	y2
9	Anodes 1 and 3	a1, a3
10	x2 Plate	x2
11	x1 Plate	x1
12	No connection	-
13	No pin	-
14	Heater	h
Side Contact	Anode 4	a4

DIMENSIONS

See pages 5 and 6

NOTES

A. The Joint Services Catalogue Number is 5960-99-000-5125

TESTS

The tests included in Specification MIL-E-1/689C for 5ADP7 shall apply with the exception of the "Persistence" and "Screen" tests.

The following Persistence test shall be added under the heading "Qualification inspection":-

With a raster of convenient size adjust Vg for a screen brightness of 10 foot-lamberts when measured through a Wratten 15 colour filter. After an excitation time of 60 seconds the time to decay to 0.05 foot-lamberts shall [redacted] less then 10 seconds or more than 30 seconds.

"The maximum limit for "Deflection factor (P2, P7) 1D2" under Acceptance inspection, part 2 (design) is to be disregarded and a limit of 67 Vdc/in. applied in lieu."

CV5125

MIL-E-1/689C
25 August 1960
SUPERSEDING
MIL-E-1/689B
23 June 1955

MILITARY SPECIFICATION SHEET

ELECTRON TUBE, CATHODE-RAY, ELECTROSTATIC DEFLECTION AND FOCUS

JAN-5ADP1, 5ADP2, 5ADP7

This specification sheet forms a part of the latest issue of Military Specification MIL-E-1.

DESCRIPTION: With post accelerator

ABSOLUTE-MAXIMUM RATINGS:

Parameter:		Ef	Ec1	ed	Eb1	Eb2	Eb3	Rg	Zd	Eb3/Eb2	Ehk	Alt.
Unit:		V	Vdc	Vdc	Vdc	Vdc	Vdc	Meg	Meg	Ratio	Vdc	ft
Maximum:		6.3±10%	0	550	1,100	2,850	6,600	1.5	1.0	2.3	±180	50,000
Minimum:	P1	---	-200	---	---	1,500	1,500	---	---	---	---	---
	P2, P7	---	-200	---	---	1,500	3,000	---	---	---	---	---
TEST CONDITIONS:	P1	6.3	Adjust	---	Focus	1,500	3,000	---	---	---	---	---
	P2, P7	6.3	Adjust	---	Focus	2,000	4,000	---	---	---	---	---

PAR. NO.	TEST	CONDITIONS	AQL (PERCENT DEFECTIVE)	INSPECTION LEVEL	SYMBOL	LIMITS		UNIT
						Min	Max	
	General							
3.1	Qualification	Required for JAN marking	---	---	---	---	---	---
3.6	Performance	(See note 1)	---	---	---	---	---	---
4.5	Holding period		---	---	---	---	---	---
4.6.1	Cathode-ray tubes (preheating)		---	---	---	---	---	---
4.9.18 and 4.9.18.1.2	Container drop	Required (see note 2)	---	---	---	---	---	---
	Qualification inspection (see note 2)							
4.9.11	Pressure	45 lb/sq in.	---	---	---	---	---	---
4.9.12.1	Low-pressure voltage breakdown	87±4 mm Hg (see note 3)	---	---	---	---	---	---
4.9.19.8	Cathode-ray vibration		---	---	width	---	1	mm
4.10.14	Direct inter-electrode capacitance	g1 to all	---	---	C	---	7.9	uuf
		k to all	---	---	C	---	5.8	uuf
		D1 to D2	---	---	C	---	3.1	uuf
		D3 to D4	---	---	C	---	1.3	uuf
		D1 to all except D2	---	---	C	---	6.1	uuf
		D2 to all except D1	---	---	C	---	6.1	uuf
		D3 to all except D4	---	---	C	---	5.0	uuf
		D4 to all except D3	---	---	C	---	5.0	uuf
4.12.3.4	Neck and bulb (electrostatic types)		---	---	dia	---	2.25	in.
4.12.4.1	Cathode illumination		---	---	---	---	---	---
4.12.10.2	Focusing voltage, zero-bias (P1)		---	---	Eb1	300	515	Vdc
	(P2, P7)		---	---	Eb1	400	690	Vdc

FSC 5960

CV5125

PAR. NO.	TEST	CONDITIONS	AQL (PERCENT DEFECTIVE)	INSPECTION LEVEL	SYMBOL	LIMITS		UNIT
						Min	Max	
	Qualification inspection (see note 2) - (Contd)							
4.12.11	Deflection factor (P1)	1D2; Eb2 = Eb3 = 1,500 Vdc	---	---	DF	32.5	39.5	Vdc/in.
	(P2, P7)	1D2; Eb2 = Eb3 = 2,000 Vdc	---	---	DF	43	53	Vdc/in.
4.12.11	Deflection factor (P1)	3D4; Eb2 = Eb3 = 1,500 Vdc	---	---	DF	24.5	30.5	Vdc/in.
	(P2, P7)	3D4; Eb2 = Eb3 = 2,000 Vdc	---	---	DF	32.5	40.5	Vdc/in.
4.12.12	Deflection-factor uniformity		---	---	---	---	2.0	%
---	Persistence	(See note 4)	---	---	---	---	---	---
	Acceptance inspection part 1 (production)							
4.12.1.2	Voltage breakdown				---	---	---	---
4.12.1.3	Voltage breakdown (electrostatic types)				---	---	---	---
4.12.2.1	†Gas "cross" (P1)	Light = 15 ftL			---	---	---	---
	(P2, P7)	Ib3 = 50 uAdc			---	---	---	---
4.12.5.1	Blemishes				---	---	---	---
4.12.5.2	†Light output (P1)				light	15	---	ftL
4.12.5.3	Modulation (P2, P7)	Ib3 = 50 uAdc			ΔEc	---	55	Vdc
4.12.7.2	Spot position (electrostatic deflection)		(See note 5)	II	---	---	16	mm
4.12.7.3	Spot displacement (leakage)				displ	---	10	mm
4.12.9	Grid cutoff voltage (P1)				Eco	-34	-56	Vdc
	(P2, P7)				Eco	-45	-75	Vdc
4.12.13.2	Grid No. 1 leakage				---	---	---	---
4.12.13.5	Grid No. 2 leakage				---	---	---	---
---	Total scan (P1)	Focused trace; light = 15 ftL (see note 6)			---	4-1/4	---	in.
	(P2, P7)	Focused trace; Ib3 = 50 uAdc (see note 6)			---	4-1/4	---	in.
---	Pattern distortion	(See note 7)			---	---	---	---
	Acceptance inspection part 2 (design)							
4.9.5.1	Base pin solder depth (rigid leads) (torque)		6.5	L6	---	---	---	---
4.10.8	Heater current		6.5	L6	If	540	660	mA

PAR. NO.	TEST	CONDITIONS	AQL (PERCENT DEFECTIVE)	INSPECTION LEVEL	SYMBOL	LIMITS		UNIT
						Min	Max	
	Acceptance inspection, part 2 (design) - (Contd)							
4.12.1.1	Electrode currents (anode No. 1)	Ec1 = 0	6.5	L6	Ib1	-15	10	uAdc
4.12.1.1	Electrode currents (cathode) (P1)	Light = 15 ftL	6.5	L6	Ik	---	1,000	uAdc
	(P2, P7)	Ib3 = 50 uAdc	6.5	L6	Ik	---	1,000	uAdc
4.12.3.1	Base (electrostatic types)	1D2; pin No. 5	6.5	L6	---	---	---	---
4.12.3.2	Side terminal (electrostatic types)	1D2	6.5	L6	---	---	---	---
4.12.3.5	Neck and base (electrostatic types)		6.5	L6	---	---	---	---
4.12.3.7	Angle between traces		6.5	L6	---	89	91	degrees
4.12.4.2	Stray emission (conventional types)	Eb2 = 2,850 Vdc; Eb3 = 6,600 Vdc	6.5	L6	---	---	---	---
4.12.5.3	Modulation (P1)	Light = 15 ftL	6.5	L6	ΔEc	---	45	Vdc
4.12.5.4	Screen (P7 types)		6.5	L6	---	---	---	---
4.12.6.1	Line width A (P1) (electrostatic deflection)	Light = 15 ftL	6.5	L6	width	---	0.75	mm
	(P2, P7)	Ib3 = 50 uAdc	6.5	L6	width	---	0.8	mm
4.12.6.1	Line width B (P1) (electrostatic deflection)	Light = 15 ftL (see note 8)	6.5	L6	width	---	0.80	mm
	(P2, P7)	Ib3 = 50 uAdc	6.5	L6	width	---	0.90	mm
4.12.10.1	Focusing voltage at cutoff (P1)		6.5	L6	Eb1	345	515	Vdc
	(P2, P7)		6.5	L6	Eb1	460	690	Vdc
4.12.11	Deflection factor (P1)	1D2	6.5	L6	DF	40	50	Vdc/in.
	(P2, P7)	1D2	6.5	L6	DF	54	56	Vdc/in.
4.12.11	Deflection factor (P1)	3D4	6.5	L6	DF	30.5	37.5	Vdc/in.
	(P2, P7)	3D4	6.5	L6	DF	40.5	50	Vdc/in.
4.12.13.1	Heater-cathode leakage		6.5	L6	---	---	---	---
	Acceptance inspection, part 3 (life)							
4.11	Life test		---	---	---	---	---	---
4.11.1.2	Cathode-ray tubes	Group C; Eb2 = 2,850 Vdc; Eb3 = 6,600 Vdc; t = 500 hr	---	---	---	---	---	---
	(P1)	Light = 15 ftL	---	---	---	---	---	---
	(P2, P7)	Ib3 = 30 uAdc	---	---	---	---	---	---
4.11.4	Life-test end points (P1)	Light = 11 ftL	---	---	---	---	---	---
		Line width A	---	---	width	---	0.75	mm
		Line width B	---	---	width	---	0.85	mm
		Modulation	---	---	ΔEc	---	45	Vdc
	(P2, P7)	Ib3 = 37.5 uAdc	---	---	---	---	---	---
		Line width A	---	---	width	---	0.8	mm
		Line width B	---	---	width	---	0.9	mm
		Modulation	---	---	ΔEc	---	55	Vdc

CV5125

PAR. NO.	TEST	CONDITIONS	AQL (PERCENT DEFECTIVE)	INSPECTION LEVEL	SYMBOL	LIMITS		UNIT
						Min	Max	
5.	Preparation for delivery	(See note 9)						

NOTES:

1. All tests listed in 3.6 are applicable except 4.8, 4.9.1.1, 4.9.8, 4.9.20.1, 4.9.20.2, and 60.1 of Appendix B.
2. All tests listed hereon except container drop shall be performed during qualification inspection; however, the 10 tests listed under qualification are normally performed during qualification inspection only.
3. This test is made with maximum rated voltage (Eg1 maximum negative voltage) applied to the base pins.
4. Persistence is specified as the cb1 value as measured for P7 screens (Radiation Laboratory Report No. 62-7, pages 24 and 25, dated 14 May 1943) at a Q of 20, corrected for an area of 50 sq cm to make the readings obtained comparable with the cb1 value for P7 screens under the standard reference conditions. The cb1 value shall be not less than 370 cb.
5. The AQL for the combined defectives for attributes in acceptance inspection, part 1 (production), excluding inoperatives, mechanical, and blemishes, shall be 1 percent.
6. The scan from the tube face centers to the extinction points of focused trace shall ±2-1/8 inches.
7. A raster pattern shall be adjusted so its widest points just touch the sides of a 3.075-inch square. No point on the pattern sides shall be within an inscribed 2.925-inch square.
8. Measure line width B at a distance from the center of the screen equal to 1/3 of the maximum bulb diameter. The applied astigmatism voltage shall be equal to zero volt.
9. Tubes shall be prepared for domestic or overseas shipment, as specified in the contract or order, in accordance with Specification MIL-E-75 and appendix thereto.
10. Production lots shall be suitably identified.
11. Referenced documents shall be of the issue in effect on the date of invitation for bids.

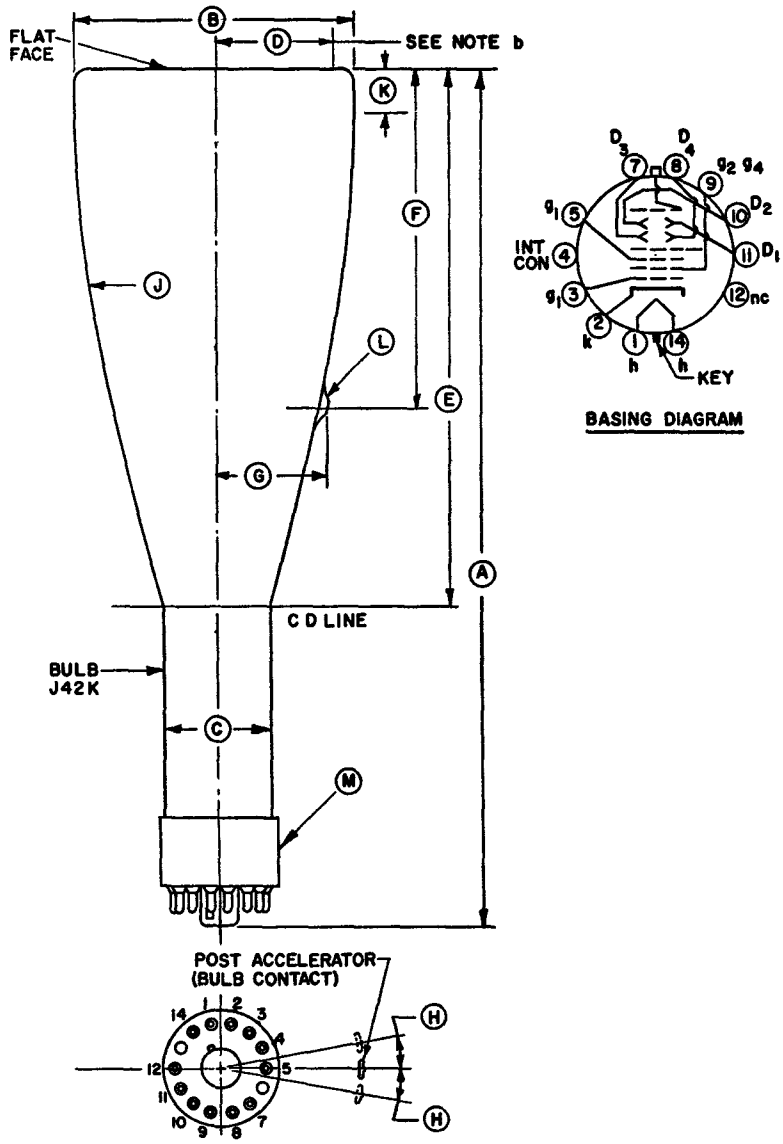

Figure 1. Outline drawing.

CV5125

DIM.	AQL (PERCENT DEFECTIVE)	INSPECTION LEVEL	LIMITS	
			Min	Max
QUALIFICATION INSPECTION				
E	---	---	10.281 nom	
J	---	---	27.813 R nom	
K	---	---	0.875 nom	
L	Bulb contact: J1-22			
M	Base: B12-37			
ACCEPTANCE INSPECTION, PART 2 (DESIGN)				
A	6.5	L6	16.563	16.938
B	6.5	L6	5.156 dia	5.344 dia
C	6.5	L6	1.938 dia	2.063 dia
D	6.5	L6	2.250 R	---
F	6.5	L6	6.000	6.500
G	6.5	L6	2.063	2.563
H	6.5	L6	---	10°

NOTES:
a. All dimensions in inches, unless otherwise specified.
b. Useful screen radius.

Figure 1. Outline drawing. -- Continued

VALVE ELECTRONIC

SERVICES VALVE TEST LABORATORY

CV 5135

Specification AD/CV.5135 incorporating MIL-E-1/495A. Issue No. 2 dated 4.8.61. To be read in conjunction with K.1006.	SECURITY	
	SPECN.	VALVE
	Unclassified	Unclassified

TYPE OF VALVE	Magnetron, pulsed, fixed frequency with integral magnet.
CATHODE	Indirectly heated
ENVELOPE	Metal-glass
PROTOTYPE	6027

MARKING

See K.1001/4.

Additional marking 6027

RATINGS			NOTE
Heater voltage nominal	(V)	6.3	A
Heater current nominal	(A)	0.5	
Operating frequency nominal	(Mc/s)	9345 to 9405	
Max. pulse voltage	(kV)	8	
Max. pulse current	(A)	8	
Max. mean input power	(W)	80	B
Max. pulse length	(μS)	2.5	
Max. duty cycle		.0025	
Max. frequency pulling	(Mc/s)	15	

CONNECTIONS

See drawing on page 3.

DIMENSIONS

See drawing on page 3.

MOUNTING POSITION

Any

NOTES

A. For warm-up time and heater voltage during operation see Note 1 on Page 2.

B. The valve is intended for convection air cooling; the anode temperature should not be allowed to exceed 120°C.

CV 5135

MIL-E-1/495A
17 April 1957
SUPERSEDING
MIL-E-1/495
20 November 1953

INDIVIDUAL MILITARY SPECIFICATION SHEET

ELECTRON TUBE, MAGNETRON, FIXED FREQUENCY, PULSED WITH INTEGRAL MAGNET

JAN-6027

This specification sheet forms a part of the latest issue of Military Specification MIL-E-1.

Ratings:	Ef	epy	ib	pi	Pi	tk	Du	tp	Anode T	Alt.
Absolute	V	kv	a	kw	W	sec	—	us	°C	ft
Maximum:	6.3±10%	8.0	8.0	64	80	—	.0025	2.5	120	10,000
Minimum:	— Note 1	6.0	3.5	21.0	—	120	—	—	—	

Mounting Position: Any
Cooling: Convection air cooled

**Cathode: Unipotential oxide coated

For miscellaneous requirements see Paragraph 3.3 Inspection Instructions for Electron Tubes.

Ref.	Test	Conditions		Min.	Max.	
3.1	Qualification Approval:	Required for JAN Marking				
4.5	Holding Period:	t = 168 hours (min.)				
4.9.13	Pressurizing:	45 psi absolute (min.)				
4.9.2	Dimensions:	Per outline				
4.9.18.1.8	Carton Drop:	(1) Package Group 9; Carton Size A				
4.9.19.1	*Vibration:	No Voltage				
4.9.19.2	**Vibration:	No Voltage				
4.10.8	Heater Current:	Ef = 6.3V; tk=120(min.)	If:	.43	.60	A ←
4.16.1	**Cooling	Per outline				
4.16.3	Oscillation (1):					
—	Coupling:	UG-40A/U				
—	Standing Wave Ratio:	σ=1.15/1 (max.)				
4.16.3.2	Heater:	Ef=6.3V; Note 1; tk=120(min.)				
4.16.3.3	Pulse Characteristics:	tp = 1.0±.1us; Du=.001; rrv=60kv/us (min.); Note 3				
4.16.3.4	Average Anode Current:	Ib=7.5 mAdc				
4.16.3.5	Pulse Voltage:		epy:	6.4	7.4	kv
4.16.3.6.1	Power Output:	t=300 (max.)	Po:	18	—	W
4.10.7.3.1	Frequency:	Temp. of Anode Block 40°±5°C; Note 5	F:	9345	9405	Mc
4.16.3.7	RF Bandwidth:	Ib=6-7.5mAdc	B.W.:	—	2.5/tp	Mc
—	*Dynamic Impedance:	Ib=5.5-7.5mAdc	Δ epy:	.20	—	kv
—	Stability:	Note 4	M.P.:	—	.25	%

CV 5135

Ref.	Test	Conditions		Min.	Max.	
4.16.3	Oscillation (2):					
—	Coupling:	UG-40A/U				
—	Standing Wave Ratio:	$\sigma' = 1.15/1$ (max.)				
4.16.3.2	Heater:	Ef=6.3V;Note 1, 2				
4.16.3.3	Pulse Characteristics:	tp=1.0±.1 us; Du=.002; rrv=60 kv/us (min); Note 3				
4.16.3.4	Average Anode Current:	Ib=7.0 mAdc				
4.16.3.5	Pulse Voltage:		epy:	6.0	7.0	kv
4.16.3.7	RF Bandwidth:	Ib=7.0mAdc	B.W.:	—	$\frac{2.5}{tp}$	Mc
4.16.5	Pulling Factor:	Ib=7.5mAdc;Osc.(1)	ΔF:	—	15	Mc
4.19.14	**Thermal Factor:	Note 5	ΔF/ΔT:	—	-.25	Mc/°C
4.9.15	**Low Temperature Operation:	tk=180(max.); Note 5				
4.11	Life Test:	Ef=3.0V;Group D; Osc. (2)	t:	250	—	hrs
4.11.4	Life Test End Point:	Osc. (1)	Po: B.W.: F: M.P.:	13.5 — 9345 —	— 3.0 9405 1.0	W Mc Mc %

Note 1: The cathode heating time shall be a minimum of 120 seconds at temperatures greater than 0°C and a minimum of 180 seconds at temperatures between 0°C and -55°C. For duty cycle greater than .001, reduce heater voltage according to manufacturer's recommendations.

Note 2: Reduce heater voltage to 4.5 volts three seconds after applying high voltage.

Note 3: The rate of rise of the voltage pulse shall be measured according to the Radiation Laboratory standard practice using a pulse differentiator. (MIT Report No. 523)

Note 4: Stability shall be measured in terms of the average number of output pulses missing, expressed as a percent of the number of input pulses applied during the period of observation. Pulses, due to any causes, are considered to be "missing" if the r.f. energy is less than 70 percent of the energy level in the frequency range of 9345 to 9405 megacycles. The number of missing pulses shall not exceed 1/4 percent of the applied pulses during any consecutive 5 minute interval of a 15 minute test period.

Note 5: The anode temperature shall be measured at the point indicated on the outline drawing.

Note 6: Reference specification shall be of the issue in effect on the date of invitation for bids.

CV 5135

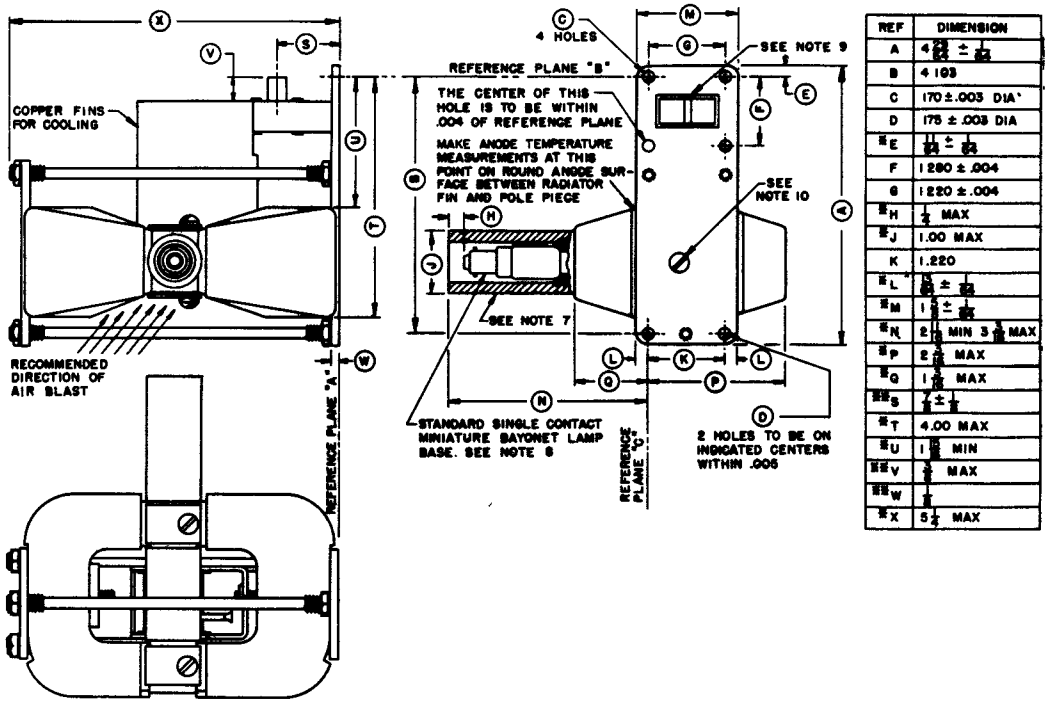

REF	DIMENSION
A	4 23/64 ± 1/64
B	4 1/8
C	.170 ± .003 DIA
D	.175 ± .003 DIA
‡E	1 11/64 ± 1/64
F	1.280 ± .004
G	1.220 ± .004
‡H	1/2 MAX
‡J	1.00 MAX
K	1.220
‡L	15/64 ± 1/64
‡M	1 1/2 ± 1/64
‡N	2 1/2 MIN 3 1/2 MAX
‡P	2 MAX
‡Q	1 1/2 MAX
‡‡S	7/16 ± 1/64
‡T	4.00 MAX
‡U	1 1/8 MIN
‡‡V	1/2 MAX
‡‡W	1/4
‡X	5 1/4 MAX

NOTE 1:
REFERENCE PLANE "B" PASSES THROUGH THE CENTERS OF THE TWO TOP HOLES OF THE MOUNTING PLATE AS SHOWN AND IS PERPENDICULAR TO PLANE "A".

NOTE 2:
REFERENCE PLANE "C" PASSES THROUGH THE UPPER LEFT HOLE ON MOUNTING PLATE AS SHOWN AND IS MUTUALLY PERPENDICULAR TO PLANES "A" AND "B"

‡NOTE 3:
SURFACE "A" WITH TUBE RESTING ON A FLAT SURFACE, A FEELER GAUGE .020 THICK AND 1/8 WIDE SHALL NOT ENTER MORE THAN 1/8 AT ANY POINT.

NOTE 4:
THE POSITION OF WAVE GUIDE HOLE IS NOT SPECIFIED ON THIS DRAWING SINCE TUBES ARE TESTED AND USED INTO COUPLER UG-40A/U.

‡‡NOTE 5:
SURFACE "A" AND INTERIOR SURFACES OF WAVE GUIDE SHALL BE PLATED 10 MSI OF GOLD OR 30 MSI OF SILVER.

NOTE 6:
ALL METAL SURFACES EXCEPT SURFACE "A" AND THE BAYONET BASE SHALL BE PAINTED BLACK.

‡NOTE 7:
THE AXIS OF THE FILAMENT LEAD PROTECTOR MUST BE WITHIN 5° OF A NORMAL TO REFERENCE PLANE "C".

‡NOTE 8:
THE CLEARANCE BETWEEN THE INSIDE SURFACE OF THE PROTECTOR AND THE 3/8 DIAMETER CYLINDRICAL SURFACE OF THE BAYONET BASE SHALL NOT BE LESS THAN 1/8.

NOTE 9:
THIS AREA IS GASKETED FOR PRESSURIZING WAVE GUIDE OUTPUT AS WITH COUPLER UG-40A/U

‡‡NOTE 10:
SOFT SOLDER TO BE USED. AS AN ALTERNATE, TIP OF SCREW MAY BE SOLDERED.

CV5143

Specification MOS/CV5143
Issue 1 dated 21st October, 1958.
To be read in conjunction with B.S.448, B.S.1409 and K1001 excluding clause 5.2

SECURITY	
Specification	Valve
UNCLASSIFIED	UNCLASSIFIED

TYPE OF VALVE - High Speed Decade Scaling Tube

CATHODE - Cold

ENVELOPE - Glass - unmetallised

PROTOTYPE - GC10D

MARKING

See K1001/4

BASE

BS448/B8-0/1.1

RATING
(All limiting values are absolute)

			Note
Max. Counting Speed	(digits/sec)	20,000	
Mom Maintaining Voltage at 800 μA	(V)	215	
Min. Anode Current	(μA)	700	
Max. Anode Current	(μA)	1,200	
Max. Striking Voltage	(V)	420	A
Max. P.D. between Guides and Cathodes	(V)	180	
Max. Input Signal			
Sine wave drive	(Vrms)	100	
Rectangular pulse drive	(V)	-194	

CONNECTIONS

Pin	Electrode	
1	Common Cathodes	k1-9
2	Third Guides	GD3
3	First Guides	GD1
4	Anode	a
5	Not Connected	N.C.
6	Output Cathode	ko
7	Output Third Guide	GD3o
8	Second Guides	GD2

DIMENSIONS

See K1001 A1/D1 and Drawing on Page 5

Dimension (mm)	Min.	Max.
L	81.5	88.5
B	27.5	29.5
C	28.0	29.9

TYPICAL OPERATING CONDITIONS

		Pulse Drive	Sine Wave Drive	
Supply Voltage	(V)	475	475	
Anode Resistor	(Kohms)	330	330	C
Signal Amplitude	(V)	-(144 +50 -12)	65-100	
Pulse Duration	(μsec)	25		
Positive Guide Bias Voltage	(V)	+72±12	+12±2	
Bias Voltage Ko	(V)	-15	-15	B
Forced Resetting Pulse	(V)	-140	-140	
Output Cathode Load	(kohms)	82	82	

MOUNTING POSITION

Any

NOTES

A. Measured with normal room illumination (5-50 foot candles).

B. Output Cathode must not rise higher than +10V with respect to commoned cathodes.

C. To reduce the effect of stray capacity to a minimum it is essential that the anode resistors be wired not more than ¼ inch from tag 4 on the valve holder.

Joint Services Catalogue Number .....

To be carried out in addition to those applicable in K1001 and in the specification order

	Test (Notes 1 and 2)	Test Conditions	AQL %	Insp. Level	Limits Min.	Limits Max.	Units
a	Time to strike and position of discharge.	Va(b) = 420V ±1%; RL = 330K ±10% Test is performed between Anode and Output Cathode (Note 4).		100%	-	10	Secs
b	Insulation	170 volts shall be applied between each electrode and all others connected together in parallel. 7 Tests.		100%	100	-	Mohms
c	Scaling Accuracy (1)	Va(b) = 440v Notes 3 and 5		100%			
d	Scaling Accuracy (2)	Va(b) = 510v Notes 3 and 6		100%			
e	Life (continuous)	See circuit on page 3.		IC			
	Life Test End Point 1000 hours Scaling Accuracy (1) Scaling Accuracy (2)	Note 7	6.5				

NOTES

1. Tests a,b,c, and d above shall be applied directly after completion of manufacture.

2. After the completion of tests listed in Note 1 above all valves shall be held for at least 4 weeks during which no tests or ageing processes shall be applied.

3. After the completion of the holding period of Note 2 tests c and d as specified above shall be performed in order.

4. K_{1-9} electrodes to be disconnected. Valve to be in normal room illumination. (5-50 foot candles). See test circuit on page 4.

5. After adjusting the value of Va(b) to the value shown in test c above, arrange the glow to invest the output cathode (Ko). Apply 16 pulses, at a repetition frequency of 20K p.p.s., as shown in figure 2 on Page 4 to the circuit shown in figure 1. Check that the glow invests the appropriate cathode. Repeat this process four more times, when the glow should again invest K_0.

   Step the glow one position to K_1 and apply a further five "trains" of pulses, when the glow should again invest K_1.

   If the glow does not occur on the appropriate cathode at any time during the 10 tests, the valve is to be rejected.

6. Repeat the 10 tests described in Note 5 above with $V_a(b)$ adjusted to the value shown in test d above.

   If the glow does not occur on the appropriate cathode at any time during the tests, the valve is to be rejected.

7. If three consecutive lots have satisfactorily completed 1000 hours life test subsequent lots shall only be tested for 500 hours. If any failures occur at 500 hours, testing shall revert to 1000 hours test until three more lots have proved satisfactory.

CV 5143

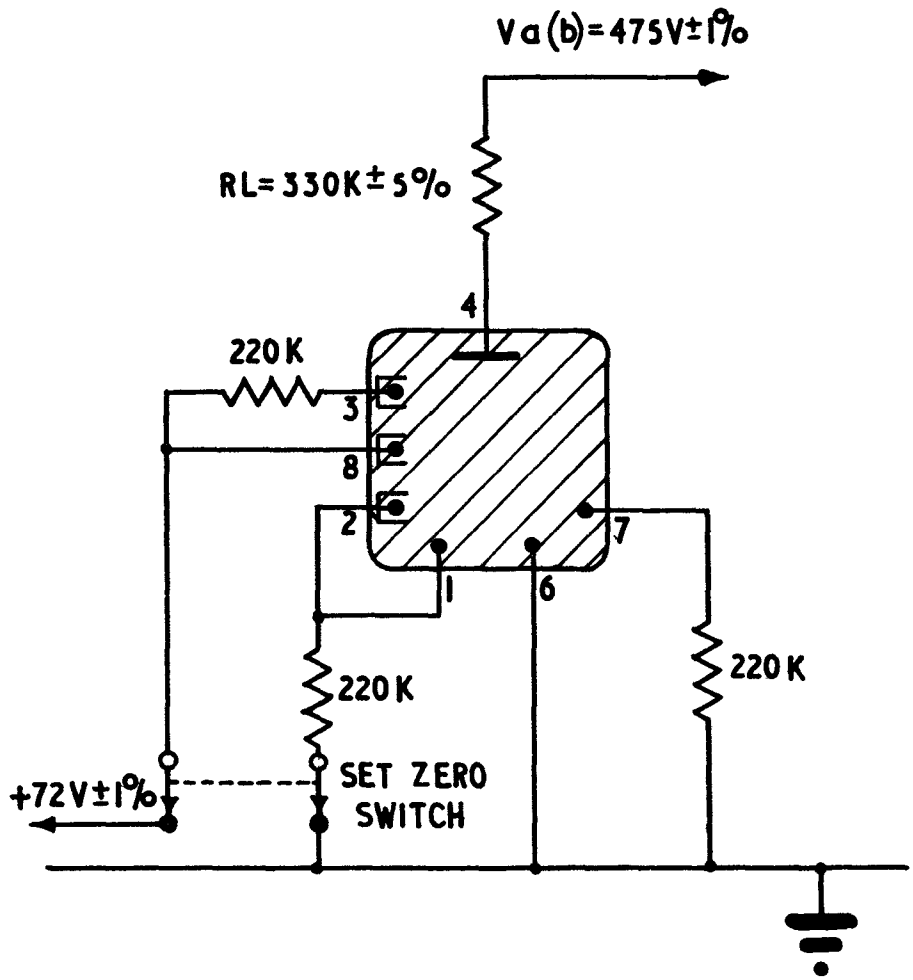

LIFE TEST CIRCUIT

TOLERANCES ± 20% UNLESS OTHERWISE STATED

FIG. 1

SCALING ACCURACY TEST.

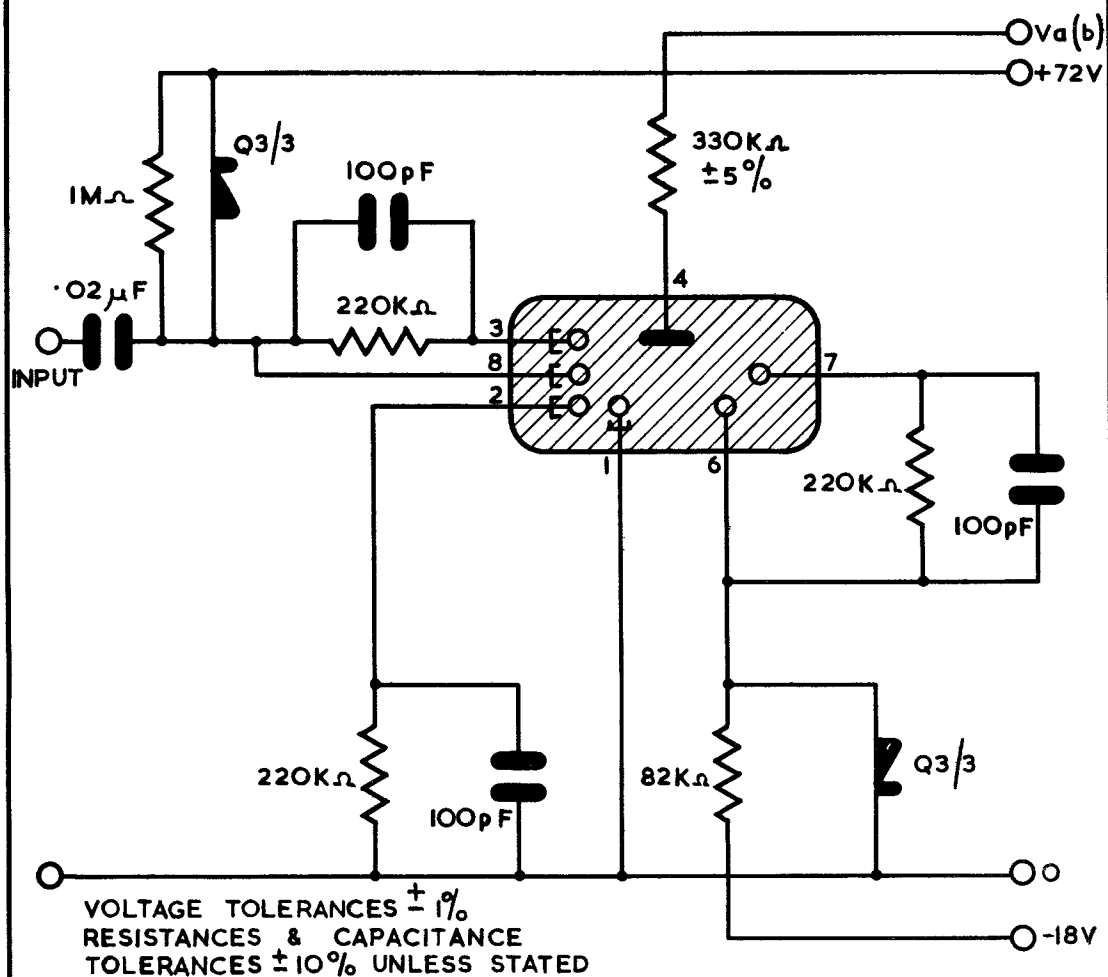

FIG. 2.

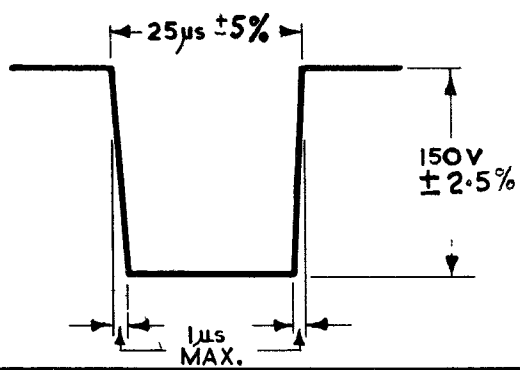

CV5143

OUTLINE DRAWING.

DIMENSIONS IN m m.
MAXIMUM ECCENTRICITY RADIUS 15·75 mm.

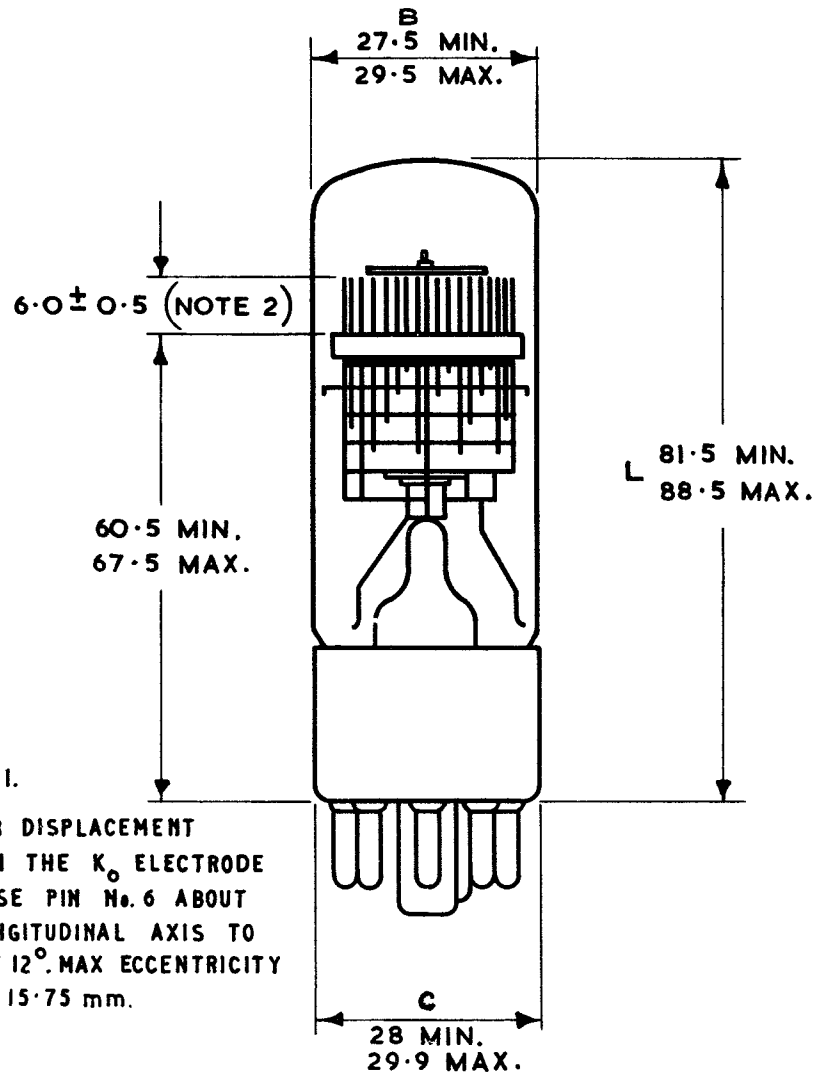

NOTE 1.

ANGULAR DISPLACEMENT BETWEEN THE K_o ELECTRODE AND BASE PIN No. 6 ABOUT THE LONGITUDINAL AXIS TO BE $0° \pm 12°$. MAX ECCENTRICITY RADIUS 15·75 mm.

NOTE 2.

THIS DIMENSION IS DETERMINED BY THE ASSEMBLY JIGS. FACILITIES MUST BE AVAILABLE FOR THESE JIGS TO BE CHECKED BY THE INSPECTING AUTHORITY AT WEEKLY INTERVALS.

MINISTRY OF AVIATION (D.L.R.D./R.A.E.)

VALVE ELECTRONIC **CV5242**

SPECIFICATION M.O.A./CV5242	SECURITY	
	SPECIFICATION	VALVE
ISSUE NO. 1 DATED 1.2.62		
To be read in conjunction with K.1001, BS.448 and BS.1409.	Unclassified	Unclassified

TYPE OF VALVE - Low Noise R.F. Grounded Cathode Triode Amplifier

CATHODE - Indirectly heated.

ENVELOPE - Glass

PROTOTYPE - A2599 (RETMA. 6CT4)

MARKING

K.1001/4.

BASE

BS.448/B9A

RATINGS
(All limiting values are absolute)

			NOTES
Heater Voltage	(V)	6.3	
Heater Current	(A)	0.3	
Max. Anode Voltage	(V)	250	
Max. Anode Dissipation	(W)	2.5	
Max. Cathode Current	(mA)	20.0	
Max. Heater Cathode Voltage	(V)	100	
Mutual Conductance	(mA/V)	14	A, C.

CONNECTIONS

Pin	Electrode	
1	Grid	g
2	Cathode	k
3	Cathode	k
4	Heater	h
5	Heater	h
6	Cathode	k
7	Cathode	k
8	Grid	g
9	Anode	a

DIMENSIONS

See BS.448/B9A/2.1
Size Ref. No. 2

CAPACITANCES (pF)

Cge	(Nom.)	3.50	B
Cae	(Nom.)	0.70	B
Cag	(Nom.)	1.1	B

DIMENSIONS (mm)	MIN.	MAX.
"A" Seated Height	-	49
"C" Diam.	-	22.2
"D" Overall Length	-	56

NOTES

A. Measured at Va (b) 180V, RL. 3.3 kΩ, Rk. 68Ω.

B. Measured with a close fitting metal screen.

C. Measured in a mutual conductance bridge, frequency 1 Kc/s, max. input signal to grid 100 mV r.m.s.

D. A Grounded Grid equivalent of this valve is Valve Type CV4105.

E. The Joint Services Catalogue Number is 5960-99-037-2097

CV5242

TESTS

To be performed in addition to those applicable in K.1001 excluding Clause 5.2

TEST CONDITIONS:- unless otherwise stated

Vh (V)	Va(b) (V)	RL. (K.Ω.)	Rk (Ω)
6.3	180	3.3	68

K.1001 Ref.	Test	Test Conditions	AQL %	Insp. Level	Symbol	Limits Min.	Limits Bogey	Limits Max.	Units
	Group A								
	Anode Current			100%	Ia	11.5	15.5	19.5	mA
	Anode Current	Vg1 = -4.0V		100%	Ia	-	-	2.6	mA
	Mutual Conductance	Note 1		100%	gm	10.5	14.0	17.5	mA/V
	Reverse Grid Current	Vg = -1.0V Rg = 500 kΩ max.		100%	-Ig	-	-	1.2	µA
	Group B								
	Heater Current		0.65	II	Ih	0.27	0.30	0.33	A
	Heater Cathode Leakage Current	Vhk ± 90V	0.65	II	Ihk	-	-	20	µA
	Group C								
	Noise Factor	Freq. = 49 Mc/s. Note 3	6.5	I	NF	-	-	1.7	dB
	Group D								
7.2	Base Strain	No voltages	6.5	IC	-	-		-	
AIII	Capacitances	Measured on a 1 Mc/s bridge with valve mounted in a fully shielded socket. Valve screened. See Note 2.			Cin	2.8	3.5	4.2	pF
					Cag	0.9	1.1	1.3	pF
					Cout	0.50	0.70	0.90	pF
	Group E								
AIX/ 2.5	Electrical retest after 28 days holding period			100%					
	Inoperatives		0.5		-	-	-	-	-
	Reverse Grid Current	Rg 500kΩ max.	0.5		Ig	-	-	1.5	µA

C.V.5242

NOTES

1. Measured in a mutual conductance bridge, frequency 1 Ko/s; maximum input signal to grid 100m.V.rms. or any other approved method.
2. Capacitance connections as follows:-

CAPACITANCE	H.P.	L.P.	E
C IN	1,8	2,3,4,5,6, 7,C.	9
C OUT	9	2,3,4,5,6, 7,C	1,8
C ag	9	1,8	2,3,4,5,6, 7,C

3. To be measured in an approved circuit: See Figs. 1 & 2 below.

FIG.1.

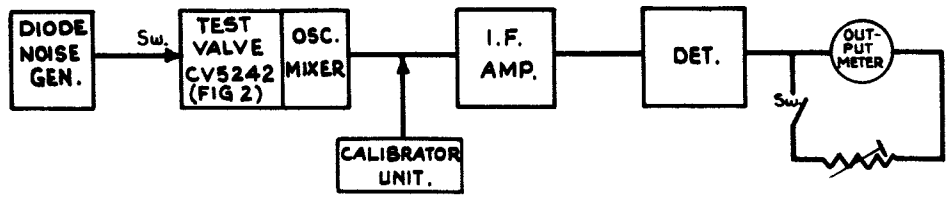

NOISE FACTOR SCHEMATIC DIAGRAM.

FIG.2.

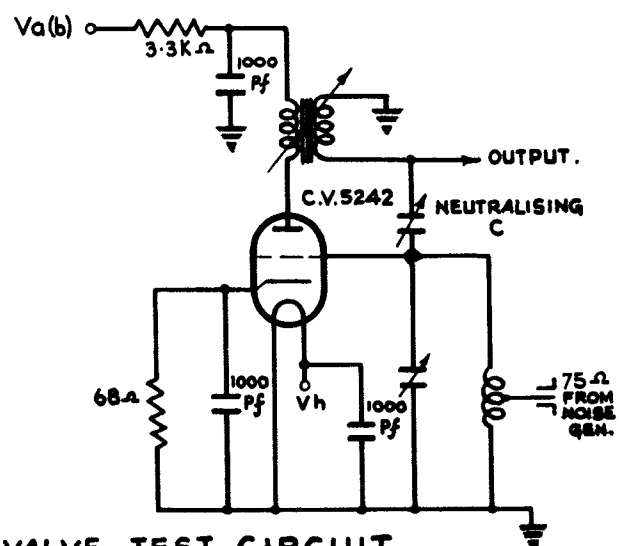

HEAD AMPLIFIER VALVE TEST CIRCUIT.

MINISTRY OF SUPPLY - R.R.E.

VALVE ELECTRONIC

CV 6005

Specification M.O.S./CV6005 Issue 1. Dated 25.6.59. To be read in conjunction with K.1001, excluding clauses: 5.2, 5.3, 5.5, 5.6, 5.8, 5.9, 5.12.	SECURITY	
	Specification	Valve
	Unclassified	Unclassified

TYPE OF VALVE - Monitor Diode

CATHODE - Indirectly Heated

PROTOTYPE - VX9216

MARKING

See K1001/4

BASE

RATING		Note
Heater Voltage (V)	6.3	A
Heater Current (A)	1.2	A
Frequency Range (mc/s)	9,000-10,000	D
Max Permissible Peak (kW) Power Input	20	B
Max: Permissible Mean (W) Power Input	18	
Max. Ambient Temperature (°C)	70	C
Max. Pulse Length (uS)	3	E

CONNECTIONS

Locating Collar - Heater & Cathode

End Cap - Heater

Centre Contact - Collector

TOP CAP

See K1001/A1/D5.1.

DIMENSIONS ETC

See pages 3 - 9 incl.

NOTES

A. The heater voltage shall be adjusted, when the valve is running with an r.f. input, to a value 10% - 20% above that required to maintain the diode output.

B. In certain approved circumstances the maximum permissable Peak Power may be higher than stated.

C. The valve shall be mounted to allow free convection of the surrounding air.

D. By using alternative mounts (which are not herein specified), the diode will operate over the range 8000 - 11000 Mc/s.

E. In certain approved circumstances the maximum permissable pulse length may be greater than stated. Also, under approved conditions, CW may be applied to the diode.

Z.19536.

TESTS

To be performed in addition to those applicable in K1001 excluding 11.4.2 (c) (d), 11.4.3.

Test Conditions, V_n = 6.3± .1 Volts.		TESTS	Limits min.	Limits max.	No Tested
a		I_h (Amps)	1.1	1.3	100%
b	Note 1	Matching V.S.W.R.		1.2	100%
c	Note 2	Contact Potential	35 uA		100%
d	Note 3 & 4	Peak Emission (Amps)	1½		100%
e	Adjust output to 100v peak across 68ohms ± 1% load. Note 5.	Input	11.9 kW	13.9kW	100%
f	No Voltages	Shock, Hammer Machine angle = 25°			T.A.

NOTES

1. The valve shall be tested in an approved holder and load at frequencies, 8,975, 9,250, 9,500, 9,750, 10,025 Mc/s each within ± 25 Mc/s. The match of the approved holder plus load will be considered satisfactory if, when using the test fixture as shown on page 8, inserted correctly in place of the valve as shown on page 3, the V.S.W.R. at the specified frequencies is less than 1.2/1.
2. Measured with a microamster with a total load resistance of 3,000 ohms ± 2½%.
3. A warm up time of 3 mins (Min) will be allowed before carrying out this test.
4. V_A = 700 ± 50V pulse.
5. The valve shall be tested in an approved holder and load, with an approved transmitter and modulator test unit, at one frequency within the range 9,000 - 9,500 Mc/s. The Duty cycle shall be 1:1250 ± 2%. A measurement shall be made with V_h = 6.3 ± 0.1 V, and then the heater shall be reduced to a value not exceeding 20% above the level required to maintain the diode output. The diode output shall not change by more than ± 2 volts, and the sensitivity shall still be within the stated limits.

SKETCH, TO SHOW VALVE IN HOLDER AND LOAD.

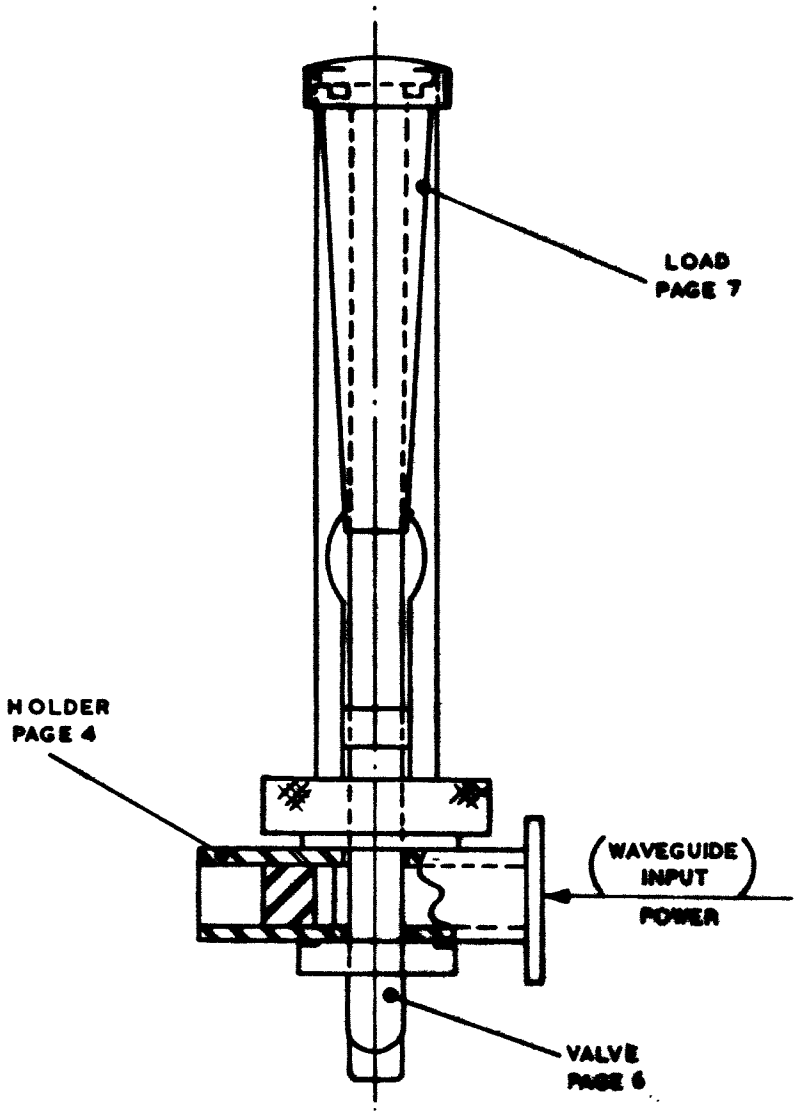

ALL DIMS IN INCHES.

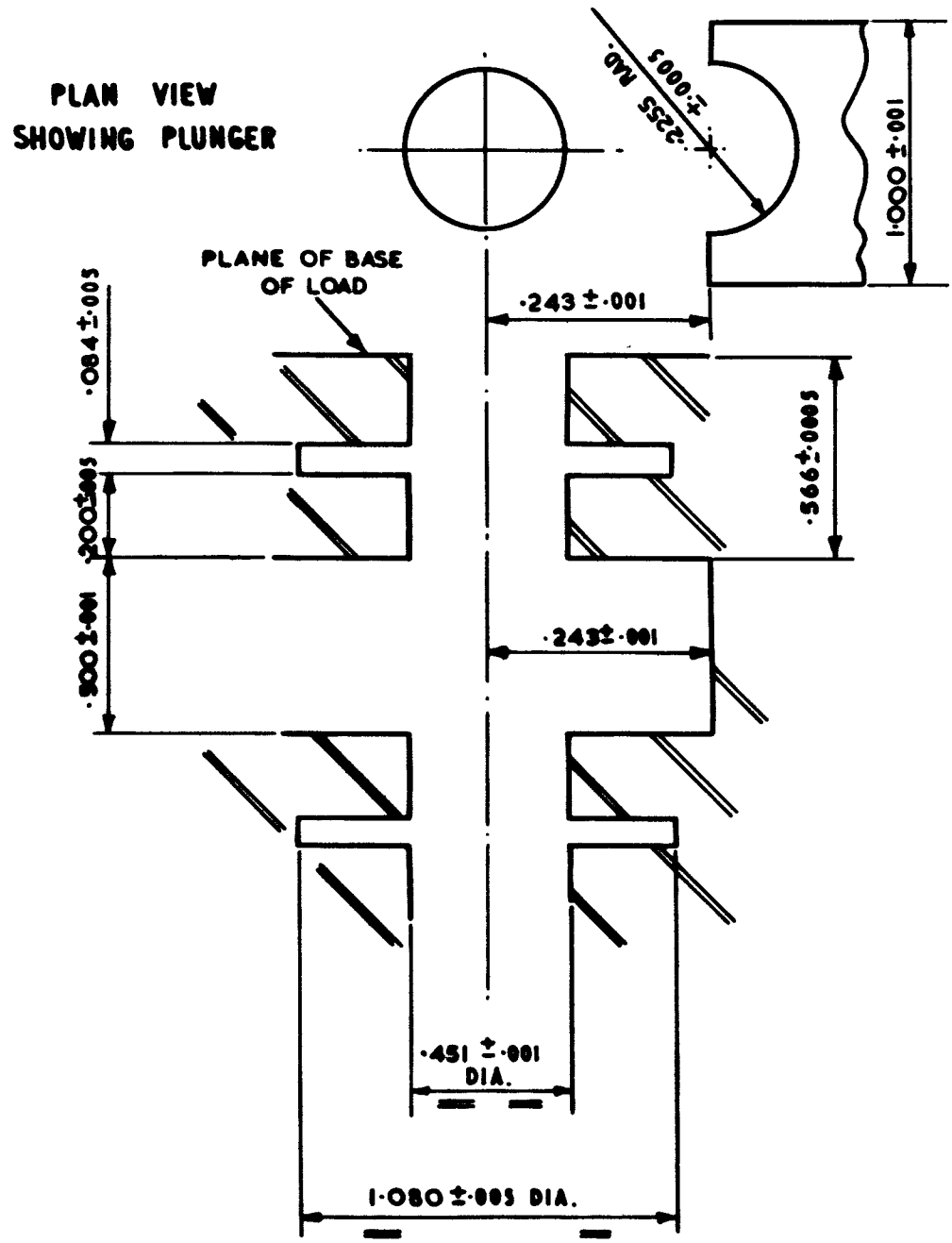

HOLDER ELECTRICAL SPEC^N.

LOAD, ELECTRICAL SPEC$^{N.}$

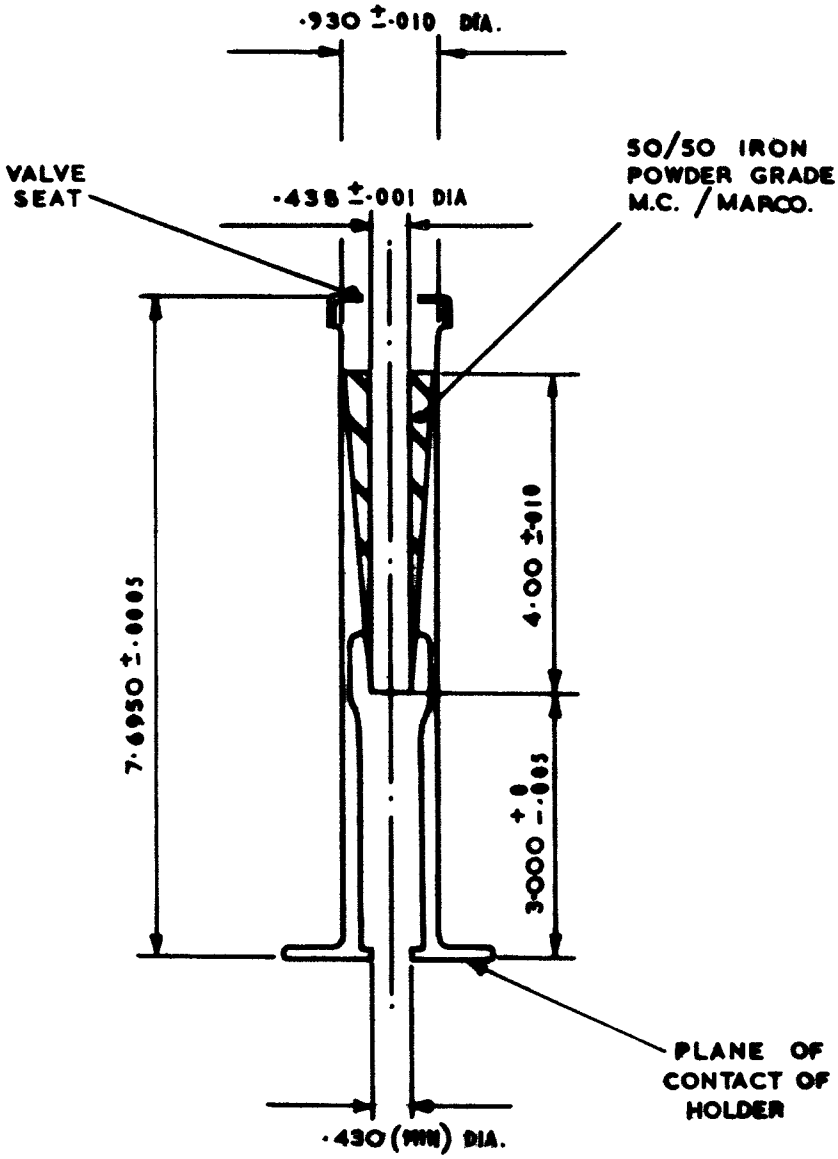

(a) THIS DRG. DOES NOT GIVE SUFFICIENT DETAILS FOR MANUFACTURING.

(b) SEE ALSO NOTE 1 ON PAGE 2.

ALL DIMS. IN INCHES.

VALVE, OUTLINE.

VALVE MUST BE TESTED FOR CONCENTRICITY BY ROTATION THRO' 360° IN SLOT OF CONCENTRICITY JIG. (PAGE 9.)

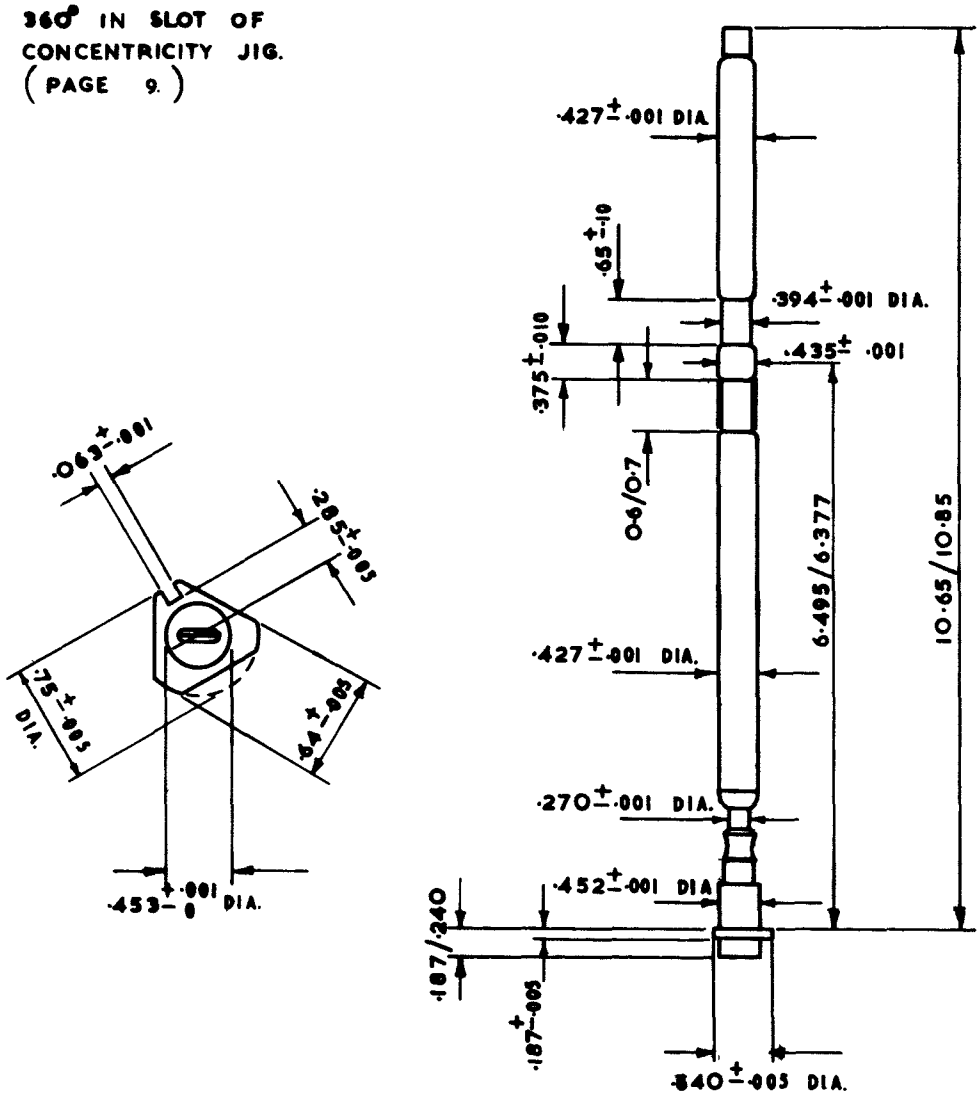

ALL DIMS. IN INCHES.

LOAD, MECHANICAL SPEC N.

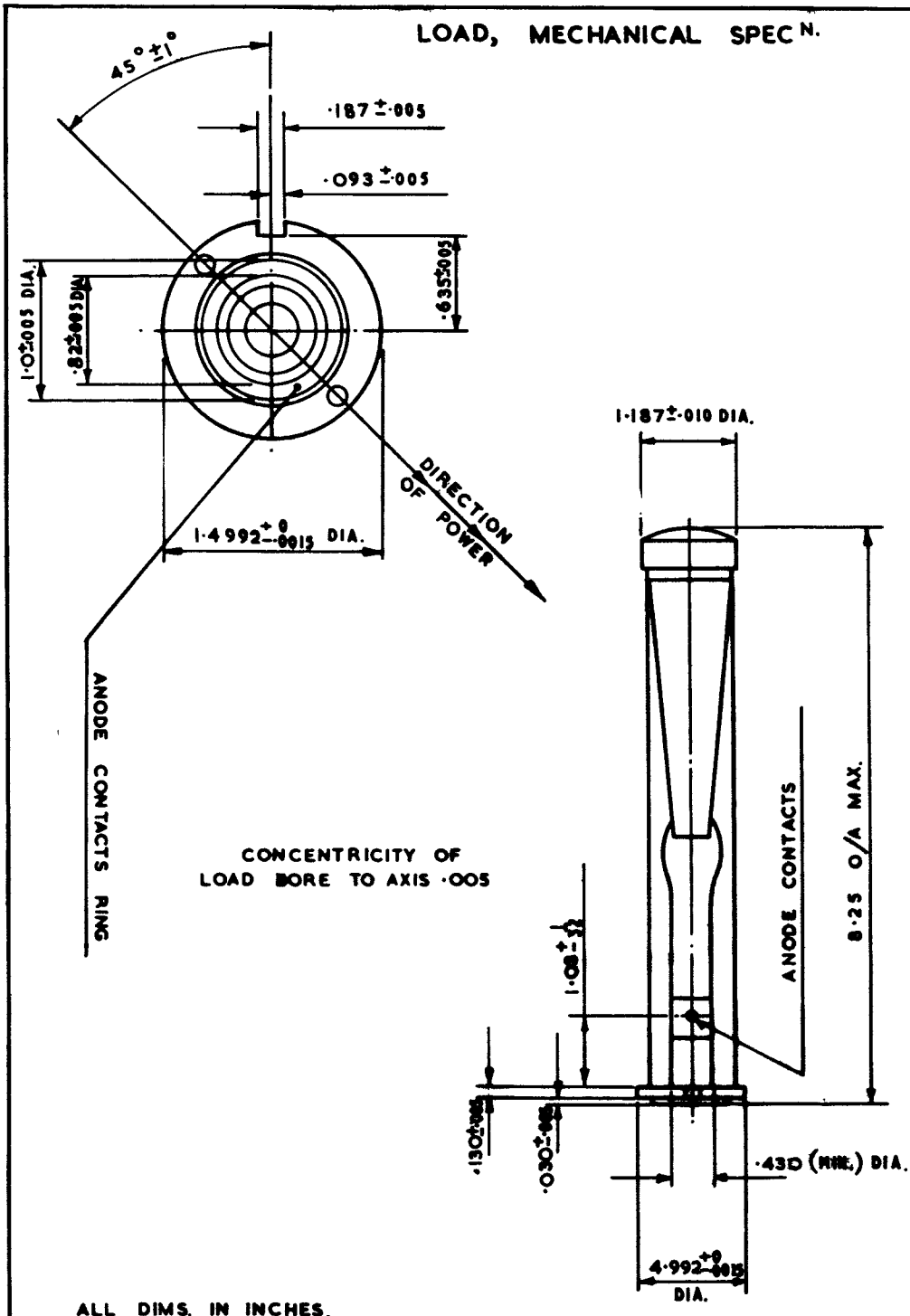

TEST FIXTURE FOR LOAD AND HOLDER.

(SEE NOTE 1, PAGE 2.)

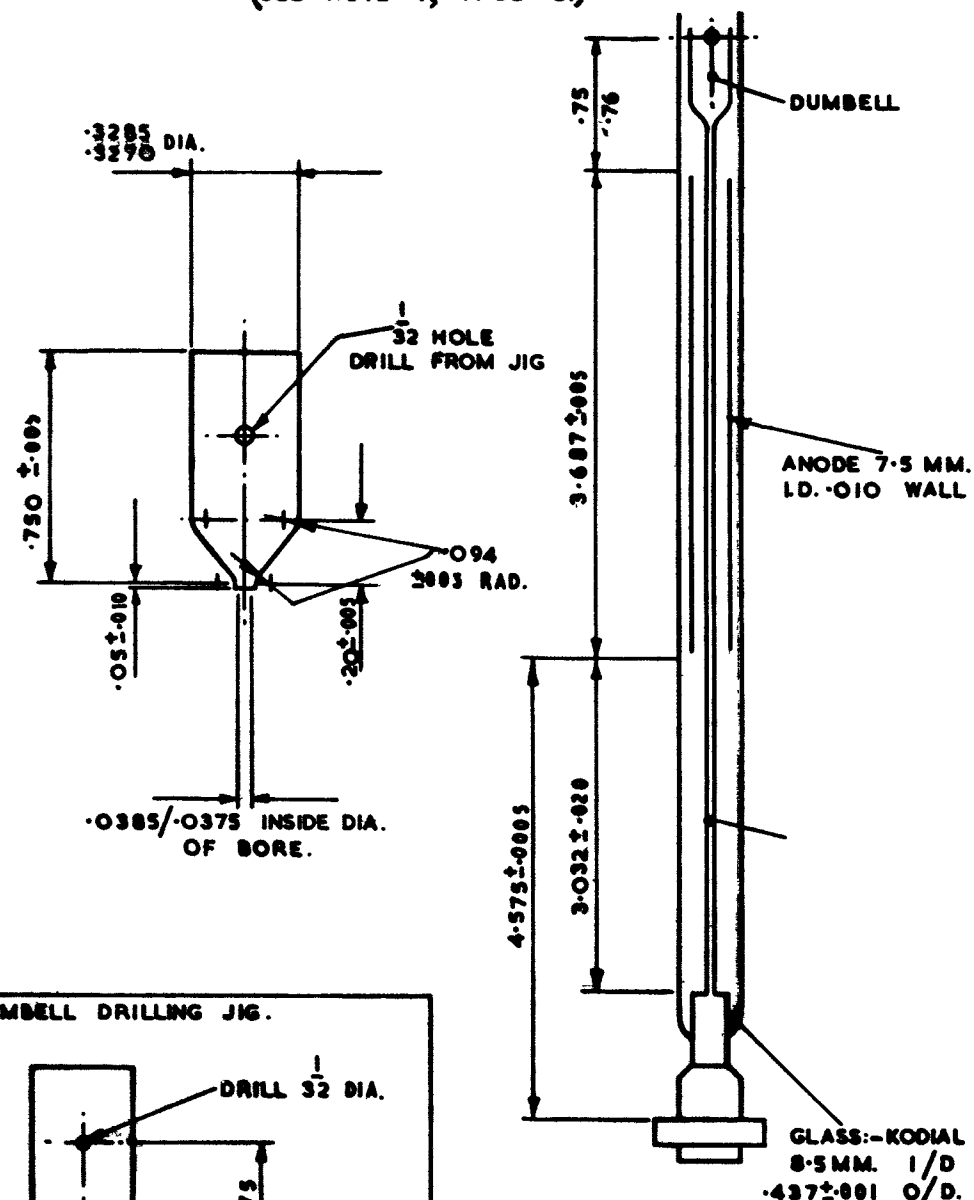

VALVE CONCENTRICITY JIG.

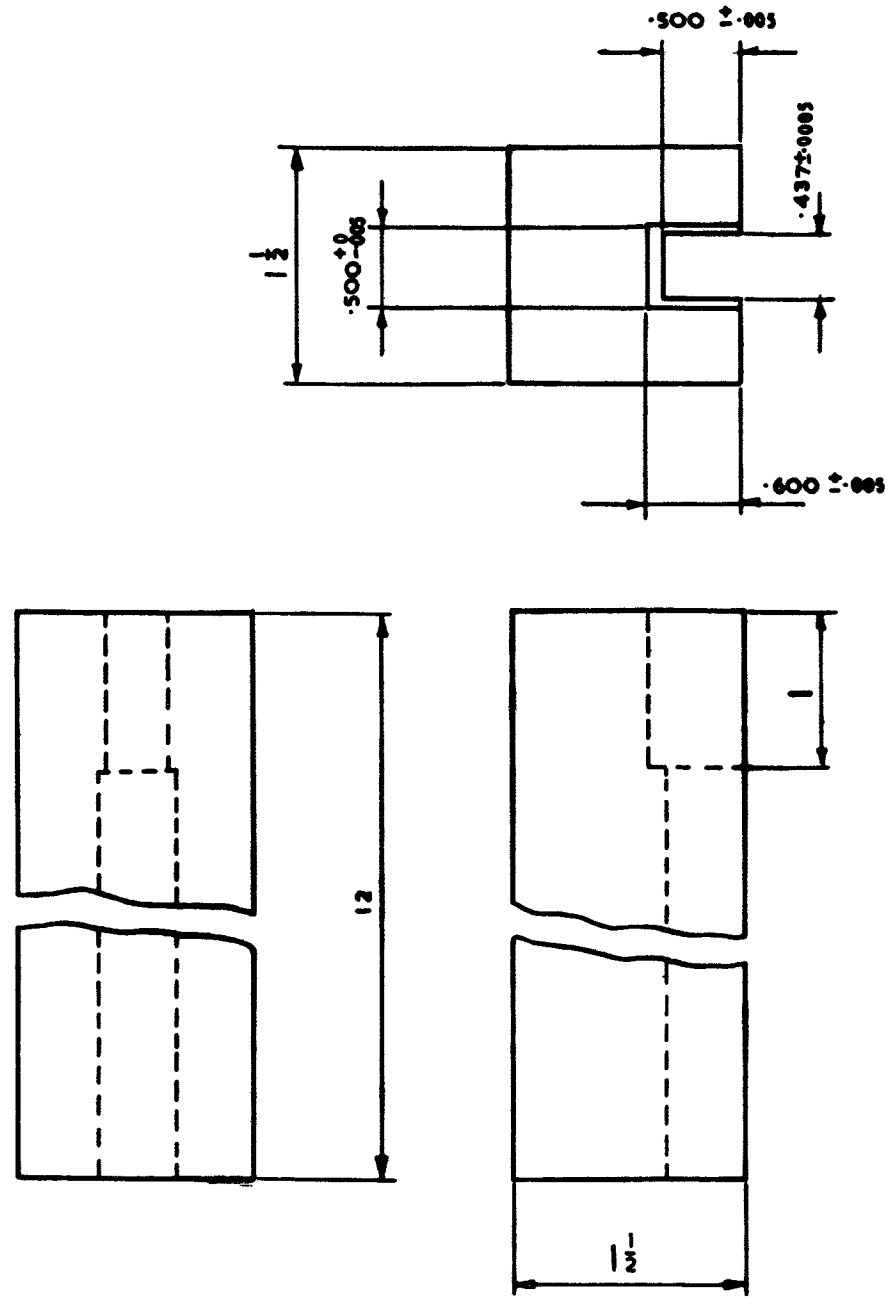

ALL DIMS IN INCHES.

MINISTRY OF AVIATION (R.R.E.)

VALVE ELECTRONIC

CV 6007

Specification MOA/CV6007 Issue 1 dated 11.12.59 To be read in conjunction with K1006 and with MIL-E-1/111B dated 14th May 1956	SECURITY Specification: Unclassified Valve: Unclassified
TYPE OF VALVE: Thyratron, Hydrogen PROTOTYPE: JAN. 3C45	MARKING See K1001/4 Add: 3C45
RATING: As on page 1 of MIL-E-1/111B, "(a)" ratings only	CONNECTIONS AND DIMENSIONS As MIL-E-1/111B
TESTS: As on pages 1,2 & 3 of MIL-E-1/111B, "(a)" tests only	PACKAGING K1005

NOTES

A.A. Copies of the Ancilliary documents called for, can be obtained from: The Secretary; TL5(b), The Ministry of Aviation, Castlewood House, 77-91, New Oxford Street, London W. C. 1.

B.B. JOINT SERVICE CATALOGUE NO:-

5960 - 99 - 037 - 2083

Z.20431.

CV6007

MIL-E-1/111B
14 May 1956
SUPERSEDING
MIL-E-1/111A
20 May 1953
MIL-E-1/138
30 March 1953

INDIVIDUAL MILITARY SPECIFICATION SHEET

ELECTRON TUBE, THYRATRON, HYDROGEN

JAN-3C45, 6130

This specification sheet forms a part of the latest issue of Military Specification MIL-E-1.

Ratings:	Test Code:	Ef	epy	epx	Ebb	Ec	egx	egy	ib	Ib	tk	dik/dt	Pb	TA	Cooling	prr	Alt
Absolute:	both:	Vac	kv	kv	Vdc	Vdc	v	v	a	mAdc	sec(min)	a/us	---	°C	---	pps	ft
Maximum:	(a):	6.3 +5% -10%	3.0 Note 1	3.0 Note 2	---	---	200	--- Note 3	35	45	---	750	0.3×10^9	+90	Note 4	---	10,000
	(b):	6.3 +5% -10%	3.0 Note 1	3.0 Note 2	---	---	200	--- Note 3	35	45	---	750	0.3×10^9	+90	Note 4	---	50,000
Minimum:	both:	---	---	5% epy	800	---	---	---	---	---	120	---	---	-50	---	---	---
Test Cond:	both:	6.3	3.0	---	---	0	---	130	---	---	120	---	---	---	---	2800	---

**Cathode: (a) Coated Unipotential
(b) Coated Unipotential

*Height: 4-1/2 in. min., 5-3/16 in. max.
4-13/16 in. min., 5-3/16 in. max.

**Base: both: Medium 4-Pin Low-Loss Phenolic A4-9
Clamping: both: Note 5

*Diameter: 1-9/16 in. maximum
**Cap: Small Metal C1-1

**Pin No.: both: 1 2 3 4 Cap
Element: both: h k g h p
k

Mounting Position: Any
**Envelope: T-12

The following tests shall be performed:
For miscellaneous requirements, see Paragraph 3.3, Inspection Instructions for Electron Tubes.

Ref.	Test	Test Code	Conditions	AQL(%)	Insp. Level or Code	Sym.	LIMITS Min.	LAL	Bogie	UAL	Max.	ALD	Units
	Qualification Approval Tests												
3.1	Qualification Approval:	both:	Required for JAN Marking	---	---								
---	Cathode:	both:	Coated Unipotential	---	---								
3.4.3	Base Connections:												
4.9.19.1	Vibration (1):	both:	No Voltages; F=12 to 50 cps; Notes 6 and 7										
4.9.19.2	Vibration (2):	both:	t = 30 (min); Note 7										
---	Operation (2):	both:	t=5.0 hours; TA=90°C; Note 8			egy:	---	---	---	---	130	---	v
---	Operation (4):	(b):	t=5.0 hours; Notes 8 and 9			egy:	---	---	---	---	130	---	v
	Measurements Acceptance Tests, Part 1: Note 10												
4.5	Holding Period:	both:	t=96 hours										
4.10.8	Heater Current:	both:		0.65	II	If:	2.0	---	---	---	2.5	---	Aac
---	†Instantaneous Starting:	both:	epy=3000v(min); Notes 8 and 11	0.65	II	---	---	---	---	---	---	---	
4.10.17.2	DC Anode Voltage:	both:	Notes 8 and 12	0.65	II	Ebb:	---	---	---	---	300	---	Vdc
---	†Operation (1):	both:	epy=4.0kv(min); Notes 8 and 13	0.65	II	egy:	---	---	---	---	130	---	v
---	Emission:	both:	ik=35a(min); prr=60pps ±10%; tp=5.0us±10%; tr=0.5us max; Note 14	0.65	II	egk:	---	---	---	---	150	---	v
4.9.1	Mechanical:	both:											

CV6007

Ref.	Test	Test Code	Conditions	AQL(%)	Insp. Level or Code	Sym.	LIMITS Min.	LAL	Bogie	UAL	Max.	ALD	Units
	Measurements Acceptance Tests, Part 2												
4.9.19.3	Bump:	both:	Angle = 20°; Note 7	6.5	IA								
---	Anode Delay Time:	both:	epy=4.0kv(min);Notes 8,13;t=120; Note 15	6.5	IA	tad:	---	---	---	---	0.6	---	us
---	Anode Delay Time Drift:	both:	Anode Delay Time; Note 16	6.5	IA	Δtad:	---	---	---	---	0.15	---	us
× ---	Time Jitter:	both:	epy=1.5kv max; Notes 8&17	6.5	IA	tj:	---	---	---	---	0.02	---	us
---	Operation (3):	(b):	t=5.0minutes;Notes 8 & 9	6.5	IA	egy:	---	---	---	---	130	---	v

Ref.	Test	Test Code	Conditions	AQL(%)	Insp. Level or Code	Allowable Defectives per Characteristic 1st Sample	Combined Samples	Sym.	Limits Min.	Max.	Units
	Acceptance Life Tests										
4.11	Life Test:	both:	Group B; Notes 8 and 18					t:	500	---	hours
4.11.4	Life Test End Points:	both:	Operation (1)					egy:	---	140	v
			DC Anode Voltage					Ebb:	---	750	Vdc
			Time Jitter					tj:	---	0.04	us
	Packaging Requirements										
4.9.18.1.6	Container Drop:	both:	(d) Package Group 1; Container Size J								

Note 1: For instantaneous starting applications where plate voltage is applied instantaneously, the power supply filter design shall be such that the maximum permissible epy is 3000v and shall not be attained in less than 0.04 seconds.

Note 2: In pulsed operation, the peak inverse voltage, exclusive of a spike of .05us max. duration, shall not exceed 1500 volts during the first 25 us after the pulse.

Note 3: Driver pulse, measured at tube socket with thyratron grid disconnected: egy=175v(min), time of rise=0.5us(max), grid pulse duration=2.0us(min). Impedance of drive circuits=1500 ohms (max.)

Note 4: Cooling of the anode lead is permissible, but there shall be no air blast directly on the bulb.

Note 5: Clamping is permissible by the base and/or bulb in the area up to 2 in. above the top of the base only.

Note 6: There shall be no pronounced resonance in the specified range.

Note 7: There shall be no evidence of shorts of any kind resulting from this test.

Note 8: The tube shall be tested in the test circuit shown in the attached drawing. Tests performed at repetition rates less than the resonant repetition rate shall be made with a hold-off diode in the charging circuit. The circuit constants shall be chosen so that at epy=3.0kv under resonant charging conditions, dik/dt=750a/us(min), ib=35a, tp=0.5us±10%, prr=3000 pps.

Warning: These conditions are specified only for the purpose of determining circuit constants. The actual operating voltage and repetition rates for each test is specified in the conventional manner under the particular conditions or under the general test conditions, as the case may be.

The grid pulse characteristics shall be tp=2.0us(max), tr=0.5us(min), Driver impedance=1500 ohms(min).

Note 9: The tube shall operate satisfactorily in an evacuated chamber in which the pressure does not exceed 70 mm Hg absolute.

Note 10: The AQL for the combined defectives for attributes in Measurements Acceptance Tests, Part 1, excluding Mechanical, shall be one percent. A tube having one or more defects shall be counted as one defective. MIL-STD-105, Inspection Level II, shall apply.

Note 11: This shall be the first test after the holding period. The tube shall operate satisfactorily on push button starting within 3 attempts when the anode voltage epy is applied to the tube under test in such a manner as to rise from 0 to 3000v within 0.03 sec. (the filter in the rectifier shall be designed so that epy reaches at least 1500v within 0.015 sec).

The intervals between successive attempts to instantaneously start the tube shall not be less than 10 seconds nor more than 30 seconds. The tube failing to start within 3 attempts will be considered a failure.

Note 12: This test shall be conducted within 60 seconds after the Operation (1) test.

Note 13: The tube shall operate continuously, for five minutes without evidence of arc-back or anode heating.

Note 14: The positive pulse shall be applied to the grid of the tube. Measure the voltage between grid and cathode 2.5us(max) after the beginning of the current pulse. The average voltage shall not rise during the last four microseconds. Plate floating.

Note 15: Anode Delay Time (tad) - a time interval between the point on the rising portion of the grid pulse which is 26% of the maximum unloaded pulse amplitude and the point where anode conduction takes place.

Note 16: During the interval between 2 minutes and 7 minutes of the Anode Delay Time Test, the change in anode delay time (Δtad) relative to the tad value observed on the Anode Delay Time test shall not exceed the specified value.

Note 17: The variation in firing time (tj) shall be measured at 50% of pulse amplitude and shall not be greater than the amount specified.

Note 18: Life test shall be operated with the tube in a horizontal position and shall be shut down every ninety-six (96) hours for a sixty (60) minute interval.

Note 19: Reference specification shall be of the issue in effect on the date of invitation for bid.

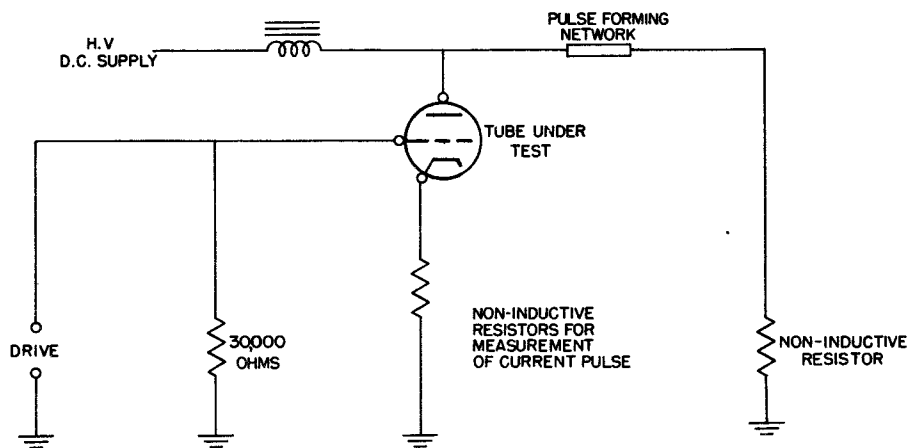

CV.6015

MINISTRY OF AVIATION - R.R.E. VALVE ELECTRONIC

Specification MOA/CV6015 Issue 1, reprint A dated 4th Jan '65 To be read in conjunction with K1006	SECURITY Valve: Unclassified Specification: Unclassified

→ Indicates a change

Type of tube : Hydrogen thyratron, tetrode, rugged with flying leads

Non simultaneous ratings (see Note A)

		Min.	Max.	Note
RMS cathode heater voltage Ef.	Volts	5.7	6.6	B
RMS reservoir heater voltage Ers.	Volts	5.7	6.6	B
Peak forward voltage epy.	kV	-	8.0	E
Peak reverse voltage epx.	kV	-	8.0	F
Mean anode current Ib.	mA	-	100	
Peak anode current ib.	Amps	-	90	
Peak rate of rise of anode current $\frac{dib}{dt}$	A/µs	-	1500	M
Operation factor: epy x prr x ib	MW kc/s	-	2.0	
Peak forward grid 1 voltage egy 1	volts	200	350	G
→ Peak forward grid 2 voltage egy 2	volts	-	350	
Peak reverse grid 1 voltage egx 1	volts	-	300	H
Peak reverse grid 2 voltage egx 2	volts	-	200	
Tube heating time tk	secs	120	-	
Bulb temperature	°C	-	250	C
Ambient temperature	°C	-55	+90	D
Ambient pressure	Torr	500	800	

ENVELOPE
Glass

CATHODE
Unipotential, indirectly heated

PROTOTYPE
VX8205

MARKING
See K1001/4

CONNECTIONS
See page 13

DIMENSIONS
Max. bulb length, including seal off pip, 115 mm.
Max. diameter 61 mm.
See page 13 for details

MOUNTING POSITION
Any

NATO STOCK NUMBER
5960-99-037-2078

Characteristics and Operating Conditions

		Min.	Nom	Max.	Note
RMS cathode heater current If for Ef = 6.3V	Amps	4.5	-	5.5	B
RMS reservoir heater current Irs for Ers = 6.3V	Amps	1.3	-	1.7	B
Grid 1 unloaded pulse voltage	V	200	-	350	G
Grid 2 unloaded pulse voltage	V	300	-	-	H
Grid 1 potential w.r.t. cathode	V	-10	-	+5	K
Grid 2 potential w.r.t. cathode	V	-100	-	-40	L
Grid 2 pulse delay tgd	µs	1.5	-	4.0	J
Anode take over voltage	kv	2.0	-	-	
Time jitter with AC on heaters tjac	ns	-	-	3	
Time jitter with DC on heaters tjdc	ns	-	-	2	G
Anode delay time tad,	ns	-	-	300	
Anode delay time drift Δtad	ns			50	
Bulb temperature	°C	80	-	250	C
Peak anode voltage, instantaneous start	kV	-	-	7	E
Peak reverse anode voltage 25 µs after pulse	kV	-	-	2.5	F
Recovery Time		-	-	-	L

NOTES

A. Paragraphs 3.2 and 6.5 of K1006 apply.

B. Reservoir and Heater should normally be connected to a common voltage supply with tolerance +5%, -10%.

→ C. The bulb temperature should be measured opposite the grid cylinder, as indicated on the outline drawing on page 12.

The bulb temperature should be allowed to exceed 80°C when the tube is running with EHT on. Excessive thermal inertia in the valve mounting should be avoided so that this temperature is rapidly reached after switch on. The life of the tube and its performance may be impaired if allowed to run for long periods with a bulb temperature of less than 80°C.

D. Ambient temperature should be measured at a point three inches from the tube in the plane through the base. When the tube is inclined to the vertical, it should be measured at the lowest point consistent with the above. The surroundings of the tube should be such as to permit free convection of air over the bulb. Cooling of the leads is permissible, but there should be no direct air blast onto the bulb.

E. For instantaneous start the peak anode voltage should not exceed 7.0 kv. The time taken to reach this voltage should exceed 40 milliseconds.

F. For pulsed operations, the peak reverse anode voltage, exclusive of a spike of 0.05μS maximum duration shall not exceed 2.5 kv during the first 25 μs after the pulse.

G. The primer drive pulse, measured at the tube socket with the primer grid 1 disconnected should be :

Amplitude (egy 1)*	200-350V (relative to cathode)
Rate of Rise	200-1500V/μSec.(26%-70.7% amplitude)
Duration	2μSec. min (70.7% amplitude)
Overlap of Trigger Pulse	0.5μSec. min. (70.7% amplitude)
Impedance of source	1200-2000 ohms (for the duration of the pulse)
D.C. Resistance	3000 ohms max.

→ *In applications where a jitter of the order of 1 nanosecond or less is required it is important that the grid 1 pulse should have an amplitude within the range 290v to 350v.

The characteristics of the pulse shall be measured in accordance with K1006, Appendix E, para 20.

H. The trigger drive pulse, measured at the tube socket with the trigger grid 2 disconnected shall be :

Amplitude (egy 2)	300V min. (relative to cathode)
Rate of Rise	1000V/μSec. min. (26%-70.7% amplitude)
Duration	0.5μSec. min. (70.7% amplitude)
Impedance of source	1500 ohms max.

The bias voltage measured at the grid 2 terminal should not drop more than 15 volts when 5 mA dc is drawn from the grid terminal.

J. tgd is defined as the time delay of the g2 pulse after the g1 pulse, measured at the 50 volt levels of the leading edges of the g1 and g2 pulses. The measurements shall be made with respect to cathode at the tube socket with the grids disconnected.

NOTES (Cont'd)

K. The limits apply to the potential of the grid during the period between the completion of recovery and the start of the suceeding grid pulse.

L. The impedance seen from grid 2 during the recovery period should be kept low and negative bias should be applied to encourage fast recovery.

M. $\frac{dib}{dt}$ should be measured by means of a mutual inductor in the anode lead of the thyratron. Overheating and subsequent fire through may occur if the rated value is exceeded.

TESTS To be read in conjunction with K1006

K1006 Ref.	Test	Conditions	Symbol	LIMITS Min.	LIMITS Max.	Units	Notes
	Qualification Approval Tests						1,2,11
	Operation 3	epy = 8kv TA = 90°C t = 5 hrs.					12,13
	Anode Delay Time	epy = 8kv	tad		300	ns	14,15
	Anode Delay Time Drift		Δtad		50	ns	14,16
	Resonance Search Fatigue	No voltages					17,18
	Operation 2	epy = 7kv t = 300 secs.					13,19
	Jitter 4	Operation 2 but with direct voltage applied to cathode heater.	tj		2	ns	21
	Jitter 5	Operation 2, with direct voltages to cathode and reservoir heaters	tj		2	ns	21
	Jitter 6	As for Jitter 4 but with egy 1 = 290V max.	tj		1	ns	21
	Jitter 7	As for Jitter 5 but with egy 1 = 290V max.	tj		1	ns	21
	Microphony	Op. 2	Δtj	To be agreed later		ns	17,20,21
	Recovery Time		tR		20	µs	22
	Measurements Acceptance Tests Part I						1,2,23
4.5	Holding Period 96 hrs. min.						
4.10.8	Heater Current	Ef = E res. = 6.3V rms.	If	4.5	5.5	Amps	
4.10.8	Reservoir Current	Ef = E res. = 6.3V rms	Ires.	1.3	1.7	Amps	
	Instantaneous Start	epy = 7kV min. tk = 120 sec.					24,25
	G1 Strike		tg1		0.8	µs	26
	Operation 1	epy = 9kv t = 300 sec.					13
4.10.17.2	dc Anode Voltage		Ebb		1500	Volts	27

CV.6015

K1006 Ref.	Test	Conditions	Symbol	LIMITS Min.	LIMITS Max.	Units	Notes
	Measurements Acceptance Tests Part II						1,2,28
	Instantaneous Start	epy = 7kv min. tk = 120 sec.					24
	Operation 2	epy = 7kv					13
	Anode Delay Time	Op. 2	tad		300	ns	14,29
	Anode Delay Time Drift	Op. 2	Δtad		50	ns	14,16
	Jitter 1 (7kv)	Op. 2	tj_7		10	ns	21,30
	Jitter 2 (7kv)	Op. 2	tj_7		3	ns	21,30
	Jitter 3 (3 kv)	epy = 3 kv	tj_3		10	ns	21,31
	Max. Primer Amplitude	epy = 7kv Ecc2 = -30V	egy1	400		Volts	32
	Short Circuit	Op. 2					33
	Degradation Rate Acceptance Tests						1,2
4.9.20.6	Fatigue	Ef = Eres = 6.3V rms No other voltages f = 50 c/s Acc. = 2.5g t = 30+30+30 hrs.					34
4.9.20.5	Shock	No voltages Hammer Angle = 24°					34
	Post Shock and Fatigue Tests						
	Instantaneous Starting	epy = 7kv min. tk = 120 secs.					24
	Operation 2	epy = 7kv t = 300 secs.					13

K1006 Ref.	Tests	Conditions	Symbol	LIMITS Min.	LIMITS Max.	Units	Notes
	Life Tests						35
	Life Test A						36,37
	Life Test B						36,37
	Life Test C						38
	Life Test End Points						1,2
	Instantaneous Starting	epy = 7kv min.					24,39
	Operation 2	epy = 7kv					13
	Anode Delay Time	Op. 2	tad		400	ns	14,29
	Anode Delay Time Drift	Op. 2	Δtad		50	ns	14,16
	Jitter 2 (7kv)	Op. 2	tj_7		3	ns	21,30
	D.C. Anode Voltage		Ebb		2000	Volts	40
	Max. Primer Amplitude	epy = 7kv Eoc_2 = -40V	egy1	400		Volts	32
	Rate of Rise	epy = 7kv	dib/dt			Amps/µs	41
	Packaging Requirements						42
	Operation 1	epy = 9kv t = 300 sec.					1,2, 13 & 43

CV.6015

NOTES

1. Tests are to be performed in the test circuit in Fig. 1, with charging inductance chosen for resonant charging at 3Kc/s.

   The test circuit parameters shall be as tabulated below, except where otherwise stated for individual tests.

   Where a particular test specifies a change in one or more of the parameters, the limits applying to all independent parameters shall be unchanged, but proportional changes shall be made to the limits applying to those parameters subject to consequential variation.

   Measurement of all grid parameters shall be made at the socket with the grid disconnected.

Feature	Symbol	Conditions	Units	Notes
Heater Supply	Ef	6.3	Volts rms.	2
	E res	6.3	Volts rms.	2
	tk	120 max.	sec.	
Grid 1 (Primer) Circuit	egy 1	200 max.	Volts	5
	tr 1	0.15 min.	µS	4
	tp 1	2.0 max.	µS	5
	Zg 1	1200 ± 10%	ohms	6
	Ecc 1	0	Volts	
Grid 2 (Trigger) Circuit	egy 2	260 max.	Volts	3
	tr 2	0.13 min.	µS	7
	tp 2	2.0 max.	µS	5
	Zg 2	1500 min.	ohms	6, 8
	Ecc 2	-40	Volts	
	tgd	1.0 - 1.5	µS	9
Anode Circuit	epy	7.0	kv	
	ib	80 ± 5%	Amps	
	dib/dt	1500 min.	A/µS	10
	Ib	75 min.	mA	
	tp	0.25 ± 10%	µS	
	prr	4000	pps	
	TA	10 - 40	°C	
Mounting Position		Vertical		

2. The heater and reservoir voltages shall be 6.3V rms. for all tests except those grouped as Measurement Acceptance Tests Part II and the Q.A. tests Jitter 4,5,6,7. All tests grouped as Measurement Acceptance Tests Part II shall be performed in the order stated, once with Ef = Eres = 5.7 Vrms and then with Ef = Eres = 6.6 Vrms. The QA Tests Jitter 4,5,6,7 shall be performed in the order stated, once with direct or alternating voltages as specified equal to 5.7V, and then with the voltages equal to 6.6V.

NOTES

3. This is measured relative to cathode in accordance with K1006 Appendix E, paragraph 20.2.

4. This is measured on the leading edge of the pulse between 26% and 70.7% of the amplitude, when the amplitude is 200V, in accordance with K1006 Appendix E, paragraph 20.2.

5. This is measured at 70.7% of the pulse amplitude, in accordance with K1006 Appendix E, paragraph 20.2.

6. The impedance during the post-pulse period, defined as $\frac{eg - Ecc}{ic}$, shall not be less than the value given for Zg where eg and ig are the values of the grid voltage and current at any instant and Ecc is the value of the grid bias supply voltage.

7. This is measured between 26% and 70.7% of the total pulse amplitude (not relative to cathode) when the total amplitude is 300V.

8. The D.C. resistance, calculated as $\frac{\Delta Eg}{\Delta Ig}$ at the grid terminal when a direct current of 6mA is being drawn, shall not be less than 3000 ohms.

9. tgd is defined as the time delay of the g2 pulse after the g1 pulse, measured at the 50 volt levels of the leading edges of the g1 and g2 pulses.

   When a large tgd is used, the length of the G1 pulse must be such that its 70.7% level overlaps by at least 0.5 µS the 70.7% level of the g2 pulse.

10. dib/dt is defined as the maximum instantaneous value of the rate of rise of ib and is to be measured by means of a mutual inductor in the anode lead of the thyratron.

11. Tests in this group are to be performed as Qualification Approval tests only, though in assessing valves for approval, some or all of the other tests may be performed in addition.

    For Q.A. purposes, all tests are deemed to bear an AQL of 10% except for those grouped as Measurements Acceptance Tests Part I, which are deemed to bear an AQL of 6.5%.

    A sample of valves may be selected at random from submissions during any period determined by the Inspecting Authority. (The samples might consist of consecutive valves submitted). The size of the sample shall be at least such that for the AQL specified, two defectives are required for rejection using table III DEF-131 at normal inspection. The results of tests on the sample, which will be carried out at the Inspecting Authority's expense, will be deemed to constitute evidence of non-compliance, if the number of defectives found exceeds that allowed for the specified AQL and the sample size using table III of DEF-131 at normal inspection.

12. The valve shall be operated in an insulating container about 450 cu. ins. in volume and of such dimensions that temperature can be measured in accordance with Notes C and D of the ratings.

13. The valve shall operate continuously at the voltage and for the time specified without evidence of arc-back and without the anode becoming red-hot.

CV.6015

14. The anode delay time (tad) is defined as the time interval between the instant when the rising trigger grid potential is equal to the cathode potential and the instant when the rate of rise of anode current pulse reaches its peak amplitude.

15. This test shall be performed 5 minutes after equilibrium has been reached at 90°C and at the end of the 5 hour run.

16. The change in anode delay time between the two readings shall not exceed the limit stated.

17. The valve shall be vibrated in each of three mutually perpendicular planes at a continuously varying frequency from 20 to 500 c/s and peak acceleration of 2g throughout the frequency range. The rate of sweep shall not exceed one octave per minute over the frequency range 20 to 200 c/s., and shall not exceed 100 c/s per minute over the range 200 to 500 c/s.

18. If any resonances are observed, the valve shall be vibrated for 10 hours of 10^7 cycles, whichever is the less, at each resonant frequency, at a peak acceleration of 2g and in the direction which gave the greatest resonance.

19. This test is to be performed after the resonance search fatigue test. A valve failing this test is deemed to have failed the resonance search fatigue test.

20. The valve shall be run under operation 2 conditions (epy - 7kv) for at least 5 minutes before, and during the vibration. Time jitter shall be measured immediately before the start of vibration and shall be observed throughout the frequency sweep. Any increase in time jitter shall be within the limit specified.

21. The measurement of time jitter (tj) shall be made on the rising front of the rate of rise waveform at 50% amplitude by means of a mutual inductor in the anode lead of the thyratron or on the trailing edge of the current pulse measured by means of a 1 ohm non-inductive resistor.

22. This shall be measured in the circuit shown in Fig. 2, and under the conditions stated below by varying the time between the instant when the peak current has fallen to 45A and the instant when probe pulse conduction occurs. The recovery time is defined as the maximum value of this period for which probe pulse conduction will occur under the given conditions:-

Pulse Repetition Rate (prr)	50 c/s ± 2c/s
Peak Cathode Current (ib)	90A min.
Current Pulse Duration (tp)	1.7µS ± 10%
Ef = E res	6.3V rms.
Trigger Bias Voltage (Ecc2)	-40V max.
Probe Pulse Amplitude	2kv peak min.
Probe Pulse Rise Time between 26% and 70.7% of full amplitude.	3 to 4 µS measured

23. All tests in this group shall be performed 100% in the order stated.

24. Grid-cathode breakdown must occur within the period before the application of anode voltage. The valve shall operate satisfactorily on push-button starting within three attempts, when the anode voltage (epy) is applied at the end of the preheat period in such a manner as to rise from 0 to 7kv within 0.03 secs. The intervals between successive attempts to start the tube shall not be less than 10 seconds nor more than 30 seconds. Any valve failing to start within three attempts shall be considered a failure.

25. This shall be the first test after the holding period.

26. The g1 voltage shall start to fall within 0.8μS of the 26% (52V) level first being reached by the unloaded grid pulse. The measurements shall be made within 10 seconds of the instantaneous start test and before raising epy to 9kv for the Operation 1 test.

27. This test shall be performed within 60 seconds of the Operation 1 test.

28. The test in this group shall be performed on a sampling basis. A lot shall consist of one month's production and the sampling scheme shall be that specified in DEF-131 for Inspection Level 1A and AQL of 10% for each test. Only normal inspection shall be used. In the event of failure on any test, the remainder of the lot shall be inspected 100% for that characteristic on which failure occurred.

29. This test shall be performed immediately after the instantaneous start test. Readings shall be taken 10 seconds and 5 minutes after the application of epy. Neither value shall exceed the limit stated.

30. Time jitter 1 and 2 (7kv) shall be measured respectively 10 seconds and 5 minutes after the application of epy, and shall be within the limits specified.

31. After Operation 2, adjust epy to 3kv and measure time jitter 3 (3 kv).

32. With the trigger bias supply (Ecc2) as specified, the primer drive amplitude (egy1) of 400V, and rise time (26% - 70.7% amplitude) 0.12μS max., there shall be no evidence of primer break through. For this test, the primer grid shall be capacitance loaded (with coaxial cable or otherwise) by at least 60pF.

33. The valve shall be run under Operation 2 conditions, during which the dummy load shall be short circuited for three periods of 1 to 2 seconds, each separated by approximately 10 seconds. The charging circuit shall be such that epy with the load short circuited is not less than the value specified for normal operation. The valve shall not arc through more than once.

34. One valve shall be subjected to this test each month. All results shall be recorded and made available to inspection and approving authorities as required.

35. One valve shall be running under each condition concurrently during the production period. Records of all life tests shall be available for examination by inspection and approving authorities as required.

36. Life Test Conditions shall be as follows:-

	Life Test A	Life Test B
epy (kv)	8	6.5
tp (μS)	0.5 ± 10%	0.25 ± 10%
ib (A)	90	60
dia/dt (A/μS)	1500 min	1500 min.
prr (pps)	2800	4000
t (hrs)	500	2000
Mounting Position	Vertical	Horizontal

37. The valve shall be tested before and at intervals during the life test to the end point tests stated (in the specified order).

38. The conditions for Life Test C (standby life test) are: Ef = E res = 6.3V rms (+5%, - 10%). The valve may be operated for 5 minutes each day under life test B conditions, but the transfer time between standby and operation conditions shall be 3 mins. max. If this time is exceeded, the valve shall be preheated with only Ef and E res applied, for 10 minutes before H.T. operation takes place. The valve shall be tested to the end point tests stated (in the specified order) initially, after approximately 250, 500 and 1000 hours, and then after every 1000 hours until failure occurs.

39. For life Test A and B, tk shall be 120 seconds.
For life Test C, tk shall be 30 minutes minimum. The transfer time between standby and test conditions may be ignored if it is less than 20secs.

40. This test shall be performed within 60 seconds of the Operation 2 Test.

41. The maximum decrease in rate of rise shall be 25% of the initial value.

42. Valves shall be packaged according to K1005 in a carton size H.

43. This shall be the sole test for packaging requirements.

CV 6015

FIG.1. GENERAL OPERATION TEST CIRCUIT.

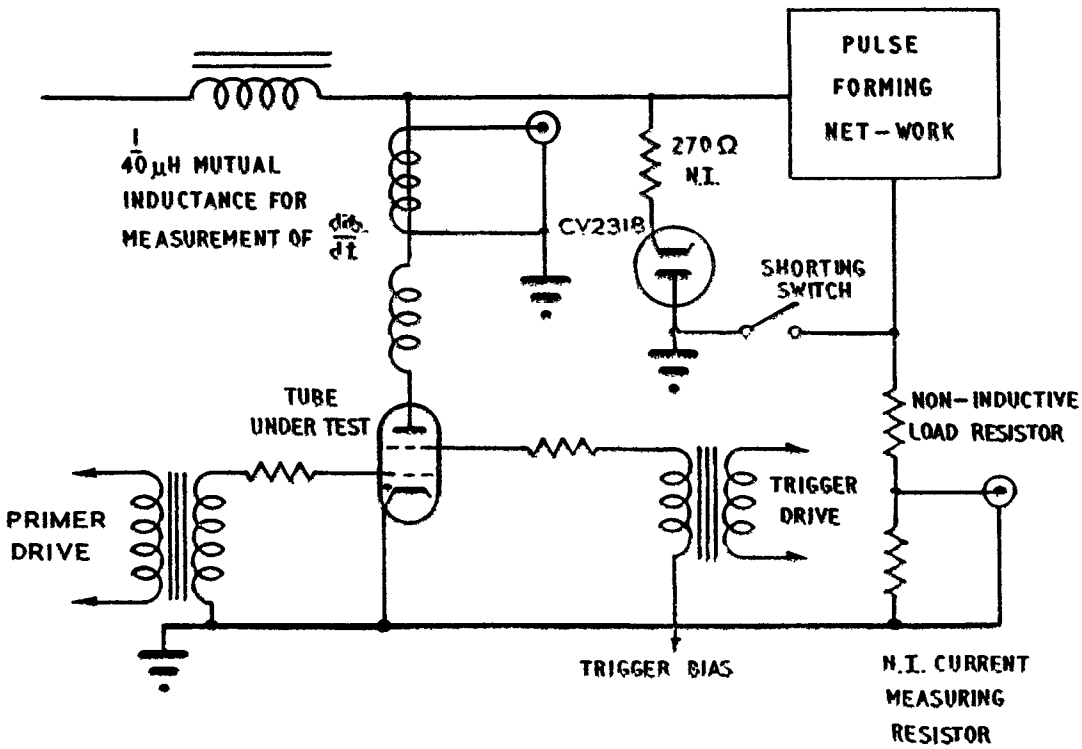

FIG.2. CIRCUIT FOR RECOVERY TIME TEST.

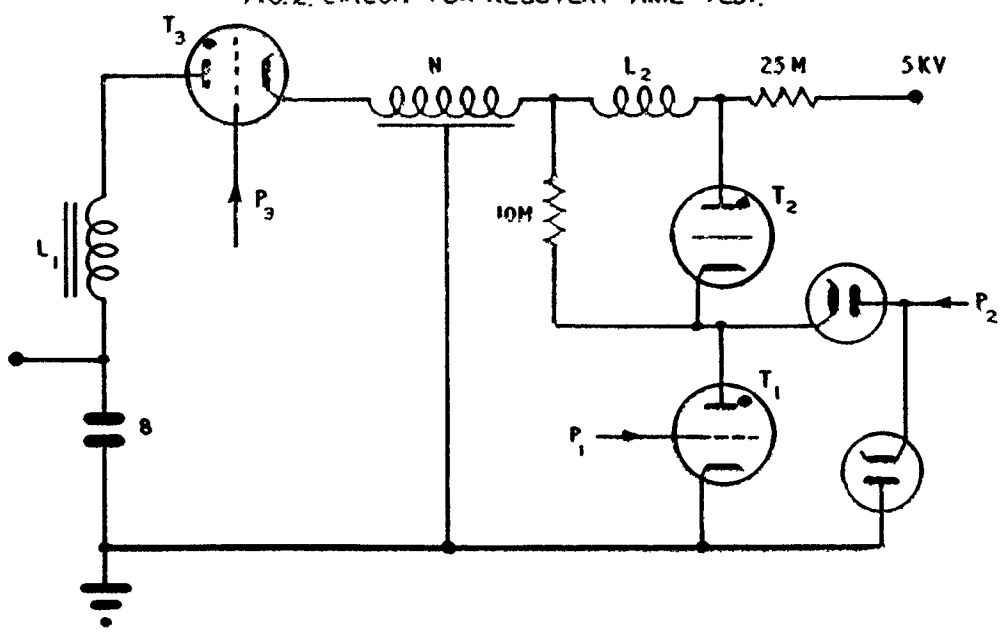

OUTLINE AND FLYING LEAD INFORMATION

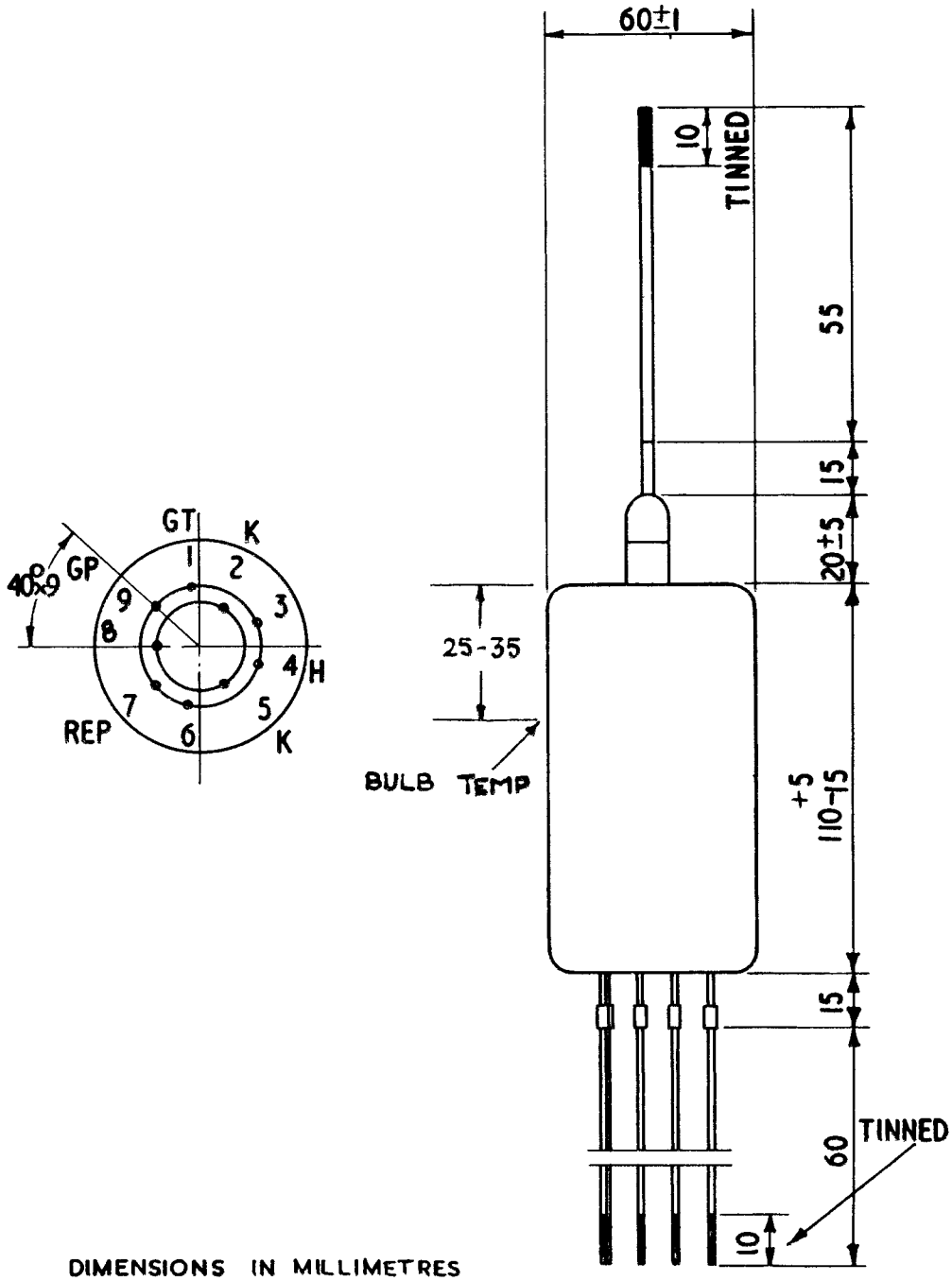

DIMENSIONS IN MILLIMETRES

VALVE ELECTRONIC

CV6023

ADMIRALTY SURFACE WEAPONS ESTABLISHMENT

Specification AD/CV6023
Issue 5 Dated 31.8.61
To be read in conjunction with K1001, BS.448 and BS.1409.

SECURITY

Specification	Valve
Unclassified	Unclassified

TYPE OF VALVE: Voltage tuned Oscillator (S-band) with Electro-magnet.
CATHODE: Indirectly heated.
ENVELOPE: Glass enclosed in a metal shell.
PROTOTYPE: VX9164 and C0119

MARKING

See K1001, issue 5.
The serial number and the optimum working current level (see Note 2) for the solenoid shall be clearly indicated on the shell of the valve.

BASE

B7D (but see Note H on page 2)

RATINGS
(All limiting values are absolute)

			Note
Heater Voltage (Nom.)	(V)	6.3	A
Max. Heater Current	(A)	2.6	
Max. Surge Heater Current	(A)	4.0	
Max. Solenoid Voltage (Vd.c.)		24	B
Max. Solenoid Current	(A)	7	B
Min. Delay-line Voltage	(V)	150	C
Max. Delay-line Voltage	(V)	1170	C
Max. Delay-line Current	(mA)	50	D
Max. Delay-line Dissipation	(W)	60	
Max. Anode Voltage	(V)	200	
Max. Anode Current	(mA)	30	
Max. Negative Grid Voltage	(V)	100	E
Min. Total Tuning Range	(Mc/s)	2400 to 4500	G
Min. Power Output	(mW)	20	

CONNECTIONS

Base:-

PIN	ELECTRODE
1.	Heater h.
2.	Cathode k.
3.	Anode a.
4.	Grid g.
5.	Delay Line and Collector dl, Col.
6.	As for pin 5. "
7.	Heater h.

Solenoid: (A.P.208600)
A. Negative supply
B. Positive supply

The power output terminal at the valve is an approved type N socket, for connection to a 50 ohms co-axial line plug J.S. No. 5935-99-940-1095.
See Note J on page 2.

DIMENSIONS

See Drawing on page 9.

NOTES

A. The heater voltages shall be applied at least two minutes before the application of the H.T. voltages.

B. The magnetic field required to focus the electron beam is provided by a solenoid which is an integral part of the valve. The optimum value of solenoid current for each valve will be stated and marked on each valve by the manufacturer. The value of this current will lie between 3-7 amps, for which a d.c. supply voltage of 16V min. to 24V max. is necessary.

(Cont'd on page 2)

NOTES (CONT'D)

B. cont'd. If the stability of the solenoid current (including transients, temperature, effects, etc.) is worse than ± 0.05 amps about the stated value, then variations in the output frequency (greater than 1 Mc/s) can be expected, accompanied by appreciable variations in power and noise output. Permanent magnets should be kept at least 12" away from valves during operation if deleterious effects are to be avoided.

Electro-magnets, transformers, etc., and non-magnetised ferrous materials should be kept at least 6" away from valves during operation if deleterious effects are to be avoided.

C. In all cases the solenoid and delay line voltages must be applied before the anode voltage.

D. The delay line and collector are connected inside the valve, and therefore the "delay line current" includes collector current.

E. For normal operation the grid is set at zero volts. At V_g = -100V oscillations are cut-off.

F. The temperature at any point on the external surface of the metal shell must not be allowed to exceed 120°C. Minimum air flow directed on to the radiating fins and side of the valve should be 50 cu. ft./min.

G. The valve is tuned by varying the delay line voltage V_{dl}. The relationship between frequency and V_{dl} is approximately given by the curve shown on page 10.

The valve oscillates at a frequency of 2400 Mc/s at V_{dl} not lower than 150V, and at a frequency of 4500 Mc/s at VL not higher than 1170V.

H. The base is rigidly attached to the metal shell and its pins are connected to the valve terminals by flexible leads.

J. The output terminal and shell of the valve are intended to be operated at earth potential, and are isolated from the delay line, other electrodes, and leads. The insulation resistance with 2 kV d.c. applied is greater than 100 Megohms. The insulation resistance between the solenoid and delay line, other electrodes and leads is also greater than 100 Megohms with 2 kV d.c. applied. The insulation resistance between the solenoid and shell of the valve is greater than 20 Megohms with 50V d.c. applied.

K. The Joint Service Catalogue No. is:-

5960-99-037-2119

CV6023

TESTS

To be performed in addition to those applicable in K1001.

Tests are to be performed in the specified order unless otherwise agreed with the Inspecting Authority.

Test conditions - unless otherwise stated:-

V_h	V_g	V_a	Cooling	v.s.w.r.
(V)	(V)	(V)		
6.3 a.c.	0	V_o (Note 1)	(Note 2)	<1.2 : 1 (Note 3)

	Test	Test Conditions	AQL %	Insp. Level	Symbol	Limits Min.	Limits Max.	Units
a	Heater Current (After two minutes)	No voltages except V_h		100%	I_h	2.1	2.6	A
b	Vibration	Adjust V_{dl} for 3400 Mc/s		T.A. and 10%				
	(i) Frequency Deviation	Notes 4, 5 and 6. Note 7.			$\pm\Delta F$	-	1	Mc/s
	(ii) Power Output Deviation				$\pm\Delta P_o$	-	5	%
	(iii) Carrier to Noise Ratio	Note 8.			C/N	150	-	dB/ c.p.s.
c	Vibration Frequency Deviation	Adjust V_{dl} for 2400 and 4500 Mc/s. Notes 4, 5 and 9		T.A.	$\pm\Delta F$	-	1	Mc/s
d	Oscillations at 2400 Mc/s	Adjust V_{dl} for 2400 Mc/s Notes 4 and 10.		100%				
	(i) Delay-line Voltage				$V_{dl.}$	150	200	V
	(ii) Delay-line Current				$I_{dl.}$	16	40	mA
	(iii) Anode Current				I_a	-	30	mA
	(iv) Power Output				P_o	20	-	mW
e	Oscillation at 2600 Mc/s	Adjust V_{dl} for 2600 Mc/s Notes 4 and 10.		100%				
	(i) Delay-line Voltage				$V_{dl.}$	180	235	V
	(ii) Power Output				P_o	50	500	mW
f	Oscillation at 3400 Mc/s	Adjust V_{dl} for 3400 Mc/s Notes 4 and 10.		100%				
	(i) Delay-line Voltage				$V_{dl.}$	400	460	V
	(ii) Delay-line Current				$I_{dl.}$	30	50	mA
	(iii) Anode Current				I_a	-	20	mA
	(iv) Power Output				P_o	150	1500	mW
g	Oscillation at 4500 Mc/s	Adjust V_{dl} for 4500 Mc/s Notes 4 and 10		100%				
	(i) Delay-line Voltage				$V_{dl.}$	1030	1170	V

(Contd)

TESTS (CONT'D)

To be performed in addition to those applicable in K1001.

Tests are to be performed in the specified order unless otherwise agreed with the Inspecting Authority.

Test conditions - unless otherwise stated:-

V_h	V_g	V_a	Cooling	v.s.w.r.
(V)	(V)	(V)		
6.3 a.c.	0	V_o (Note 1)	(Note 2)	< 1.2 : 1 (Note 3)

	Test	Test Conditions	AQL %	Insp. Level	Symbol	Limits Min.	Limits Max.	Units
g cont'd.	(ii) Delay-line Current				$I_{dl.}$	30	50	mA
	(iii) Anode Current				I_a	-	20	mA
	(iv) Power Output				P_o	250	2200	mW
h	Anode Modulation Ratio of max. to min. values of Power Output.	Adjust V_{dl} for 2400, 3400 and 4500 Mc/s. Adjust V_a from V_o to V_o - 100V. Notes 4 and 11		100%	$\frac{P_o \text{ (Max.)}}{P_o \text{ (Min.)}}$	3.5	-	
j	Grid Characteristics (i) Cut-off	V_g = -100V V_{dl} = Adjusted from 150V to 1170V		100%	P_o	-	0	mW
	(ii) Power Output	V_g = -60V V_{dl} = Adjusted from 150V to 1170V			P_o	-	20	mW
	(iii) Slope	V_g = varied from -100V to 0V. V_{dl} = 1170V			$\frac{\Delta P_o}{\Delta V_g}$	Must always be positive		mW/V
k	Grid Insulation Grid Current Record	V_g = Adjust for $I_{dl} + I_a$ = 10 mA V_{dl} = 1200V Then reduce V_a to zero		100%	$I_{g(1)}$	-	40	µA
l	Vacuum Test	V_g = as for test k. V_{dl} = 1200V Note Grid Current ($I_{g(2)}$) $I_{g(2)} - I_{g(1)}$		100%	ΔI_g	-	10	µA
m	Grid Pulse Modulation Peak Power Output P(pk) Record	V_g = pulsed from cut-off value to zero volts Pulse length = 0.2 µSec. (Nom.) at 1000 p.p.s. V_{dl} = adjust for 3400 Mc/s Note 4		T.A.				
	C.W. Power Output $P_o(1)$ Record	$\frac{P_o(1) - P(pk)}{P_o(1)}$				-	20	%

CV6023

TESTS (CONT'D)

To be performed in addition to those applicable in K1001.

Tests are to be performed in the specified order unless otherwise agreed with the Inspecting Authority.

Test conditions - unless otherwise stated:-

V_h	V_g	V_a	Cooling	v.s.w.r.
(V)	(V)	(V)		
6.3 a.c.	0	V_o (Note 1)	(Note 2)	<1.2 : 1 (Note 3)

	Test	Test Conditions	AQL %	Insp. Level	Symbol	Limits Min.	Limits Max.	Units
n	**Valve Noise** Carrier to noise ratio	Adjust V_{dl} for all frequencies between 2400 and 4500 Mc/s. Notes 8 and 12.		100%	C/N	150	-	dB/ c.p.s.
p	**Stability**	V_{dl} adjusted - I (solenoid) set to value best suited to the particular valve (Note 2) plus 0.05 and less 0.05 amps. in turn.		T.A.				
	(i) Power Output 2400 - 2600 Mc/s.				P_o	20	-	mW
	2600 - 4500 Mc/s.				P_o	50	-	mW
	(ii) Frequency Deviation at 2400, 2900, 3400, 4000, and 4500 Mc/s	Note 4			ΔF	-	±1	Mc/s
	(iii) Carrier to Noise Ratio				C/N	150	-	dB/ c.p.s.
q	**Frequency Pulling** at 2400, 3400 and 4500 Mc/s.	Adjust V_{dl} for test frequencies. Notes 4 and 13.		100%	ΔF	-	7	Mc/s
r	**Insulation Resistance**	No operating voltages. 2 kV d.c. applied between test electrode pin and shell.		100%				
	(i) Shell to Delay-line and Collector				Rdl.	100	-	Megohms
	(ii) Shell to Cathode/ Heater.				R_c	100	-	Megohms
	(iii) Shell to Grid				R_g	100	-	Megohms
	(iv) Shell to Anode				R_a	100	-	Megohms
		2 kV d.c. applied between test electrode and solenoid						

(Cont'd)

TESTS (CONT'D)

To be performed in addition to those applicable in K1001

Tests are to be performed in the specified order unless otherwise agreed with the Inspecting Authority.

Test conditions - unless otherwise stated:-

V_h	V_g	V_a	Cooling	v.s.w.r.
(V)	(V)	(V)		
6.3 a.c.	0	V_o (Note 1)	(Note 2)	$\leq$1.2 : 1 (Note 3)

	Test	Test Conditions	AQL %	Insp. Level	Symbol	Limits Min.	Limits Max.	Units
r cont'd	(i) Solenoid to Delay-line and Collector				R_{dl}	100	-	Megohms
	(ii) Solenoid to Cathode/ Heater				R_c	100	-	Megohms
	(iii) Solenoid to Grid				R_g	100	-	Megohms
	(iv) Solenoid to Anode				R_a	100	-	Megohms
		50V d.c. applied between solenoid and shell of valve			-	20	-	Megohms
s	Leakage Current Heater/Cathode Current.	No operating voltages Note 14.		100%	$I_{h,k}$	-	750	μA
t	Life	Adjust V_{dl} for 3400 Mc/s Notes 4 and 15.		T.A. and 2%	t P_o	500 10	- -	hours mW

NOTES

1. Vo which must be within the limits 100-200 volts d.c., must be quoted on the data sheets supplied with each valve. Vo is a single fixed value of V_a which is compatible with tests (d), (e), (f) and (g).

2. The valve must be air cooled, the air at ambient temperature being directed on to the side of the metal shell and radiator. Air flow to be not greater than 50 cu. ft./min.

   The solenoid current shall be adjusted to the value best suited to the particular valve. This current must lie between the limits 3-7 amps. (Stabilised to $\pm$ 0.05A). All tests shall be carried out with another CV6023/4 placed alongside the valve under test, the main axes of the two valves being parallel and the distance between the nearest points of the valves to be 6". The Output socket of the valve undergoing test should be opposite the Output socket of the second valve, which should also have its solenoid energised as for normal operation.

3. The input v.s.w.r. of the power and frequency measuring equipment must be less than 1.2 over the full μ-wave frequency range of 2400 - 4500 Mc/s.

NOTES (CONT'D)

4. The frequency shall be set to within ± ½%.

5. The valves shall be mounted rigidly on a vibration table, and while operating shall be vibrated with simple harmonic motion, in the direction of each of the three mutually perpendicular axes successively, at the following vibration frequencies and amplitudes:

Vibration Frequency Range (c.p.s.)	Amplitude of Vibration (inches)
1 - 15	± 1/16
15 - 30	± 0.010
30 - 50	± 0.005
50 - 80	± 0.002
80 - 100	± 0.001

The vibration frequency range shall be continuously explored once. The rate of change of this frequency shall not exceed 20 c/s per minute.

6. One valve in ten shall be tested. In the event of failure, a second valve shall be vibrated. If this valve proves satisfactory, the batch shall be accepted: if unsatisfactory, the batch shall normally be rejected. At the discretion of the Government Authority concerned, however, a rejected batch may be re-submitted for acceptance following a joint investigation by the contractor and the Government Authority. Valves satisfying this test, which is considered to be non-destructive, may be accepted as part of the order.

7. The test requirement is that frequency modulation of the RF output by the vibration shall not exceed ± 1 Mc/s at any frequency in the μ-wave tuning range for the range of vibration frequencies tabulated under Note 5.

8. The heater supply shall be d.c. or rectified and smoothed a.c. A broadband non-balanced mixer shall be used throughout noise tests. The noise output shall be indicated on a visual display. The following tests are to be made:-

   (a) The ratio of signal to average noise over 10 Mc/s bandwidths centred at frequencies of 60 Mc/s and 120 Mc/s shall not be less than 150 dB/c.p.s.

   (b) The ratio of signal to average noise over a 20 Kc/s bandwidth centred at 1.0 Mc/s shall be measured for record purposes only, and test results for all valves, shall be made available to the specifying authority. These measurements to be made at 2400, 3400, and 4500 Mc/s only.

   For all noise measurements the load v.s.w.r. shall be less than 1.5.

9. Additionally, if necessary, valves shall be vibrated over the full carrier frequency range at any vibration frequency at which mechanical resonances are observed to occur. The value of ΔF must not, with these vibration frequencies, exceed ± 1 Mc/s at any carrier frequency in the range 2400 to 4500 Mc/s.

10. The manufacturer is to supply with each valve:-

(i) A power output versus delay line voltage characteristic covering the range of frequencies 2400 to 4500 Mc/s. The power output shall not be less than 50 mW at any frequency above 2600 Mc/s, nor be less than 20 mW at any frequency below 2600 Mc/s.

(ii) A frequency versus delay line voltage characteristic covering the range of frequencies 2400 to 4500 Mc/s. There must be no frequency discontinuities over this tuning range.

11. With each valve, the manufacturer is to supply anode modulation characteristics showing power output versus anode voltage for each test frequency.

12. The time taken in this test for each sweep over the carrier range of 2400 - 4500 Mc/s shall not be less than two minutes.

13. The pulling frequency is the difference between the max. and min. frequencies recorded when a mismatch placed in the output section is varied through all phases. The v.s.w.r. of the mismatch shall normally lie between 1.5 - 1.6 at each microwave frequency, but the manufacturer may, at his discretion, exceed a v.s.w.r. of 1.6 during this test.

A curve showing variation in frequency pulling over the tuning range shall be recorded for each valve. Measurements shall be made at delay line voltages separated by intervals of 40 volts from V_{dl} = 150V to V_{dl} = 510V, and by intervals of 60 volts from V_{dl} = 510 to V_{dl} = 1170V. This information must be made available to the specifying authority.

14. The maximum permissible leakage current to apply in this case for the Heater/Cathode Leakage Test (K1001 paragraph 5.3), shall be 750 μA.

15. The life of a valve shall be considered to be terminated when, at any frequency in the range 2400 to 4500 Mc/s, the power output falls below 10 mW, and the performance of the valve falls outside any of the limits specified in all other tests, except test (b).

The test and release sequence, and the procedure to be adopted in the event of failure in life testing, will be decided by the purchasing authority. For production contract orders of less than 50 valves, the quantity of valves for life tests shall be decided by the purchasing authority.

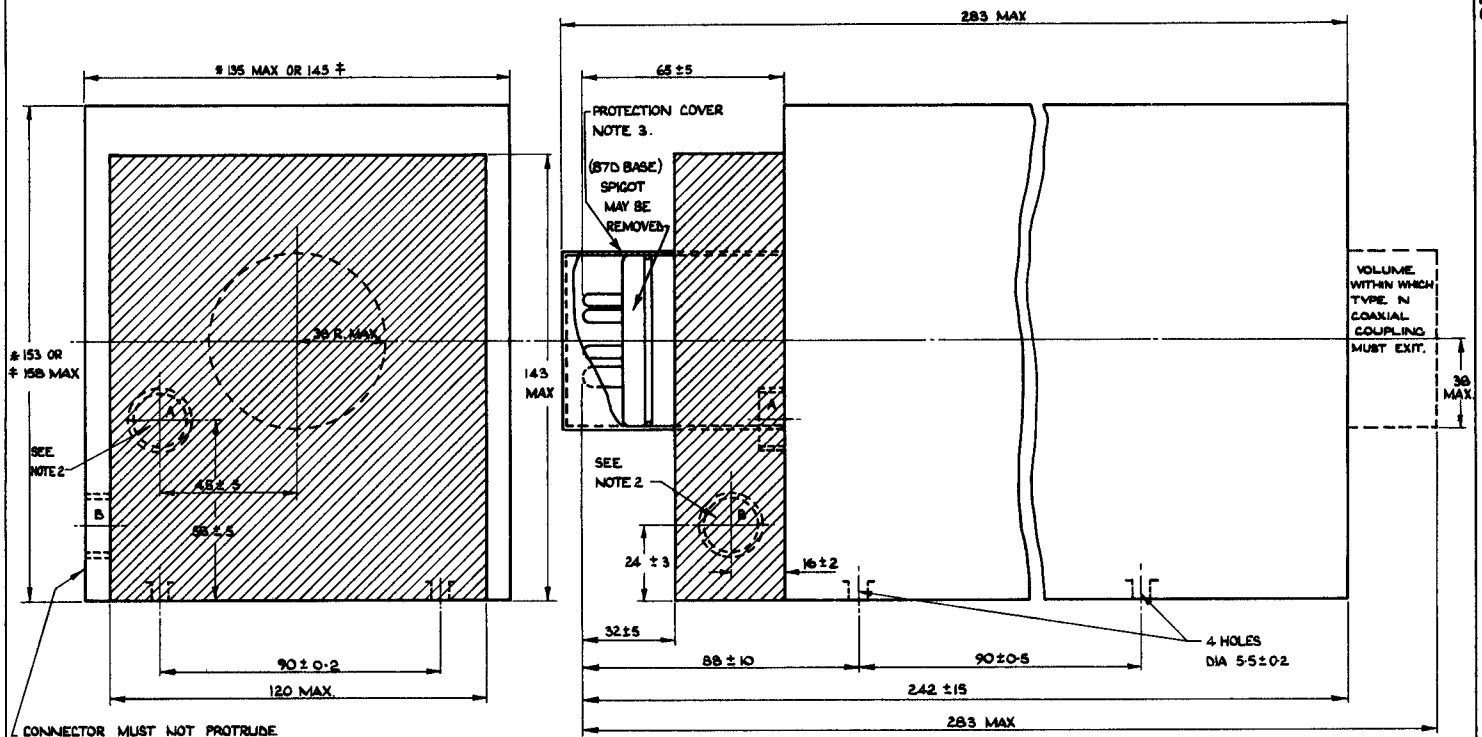

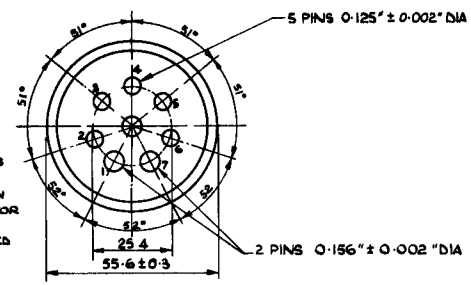

B7D BASE

* FOR CV2381
‡ FOR CV6023

ALL DIMENSIONS ARE IN MM's

NOTES

1. THE FIXING HOLES ARE AS SHOWN TO INDICATE THAT THERE MUST BE EASE OF ACCESS TO FIXINGS
2. FOR CV6023 ONLY IF IT IS CONVENIENT TO THE MANUFACTURER TO INCLUDE A RESISTANCE IN SERIES WITH THE SOLENOID IN ORDER TO MEET THE REQUIREMENTS OF THE SPECIFICATION, THIS RESISTANCE MAY BE INCLUDED WITHIN THE EXTRA VOLUME OF THE HATCHED AREAS SHOWN. ALTERNATIVE POSITIONS ARE SHOWN FOR MOUNTING THE SOLENOID CONNECTOR (A.P 208600). IF NO SERIES RESISTOR IS USED, THE CONNECTOR CAN BE FITTED IN POSITION 'A'. IF WITH A RESISTOR, POSITION 'A' CANNOT BE EMPLOYED, THEN POSITION 'B' MUST BE USED
3. CONSTRUCTED OF METAL OR OTHER APPROVED MATERIAL, THIS COVER MUST FIT FIRMLY OVER THE BASE, AND BE EASILY REMOVED WHEN THE VALVE IS REQUIRED TO BE USED. THE PROTECTIVE COVER MAY BE OMITTED IF THE BASE OF THE VALVE DOES NOT FORM PART OF THE VACUUM ENVELOPE

(AA1)

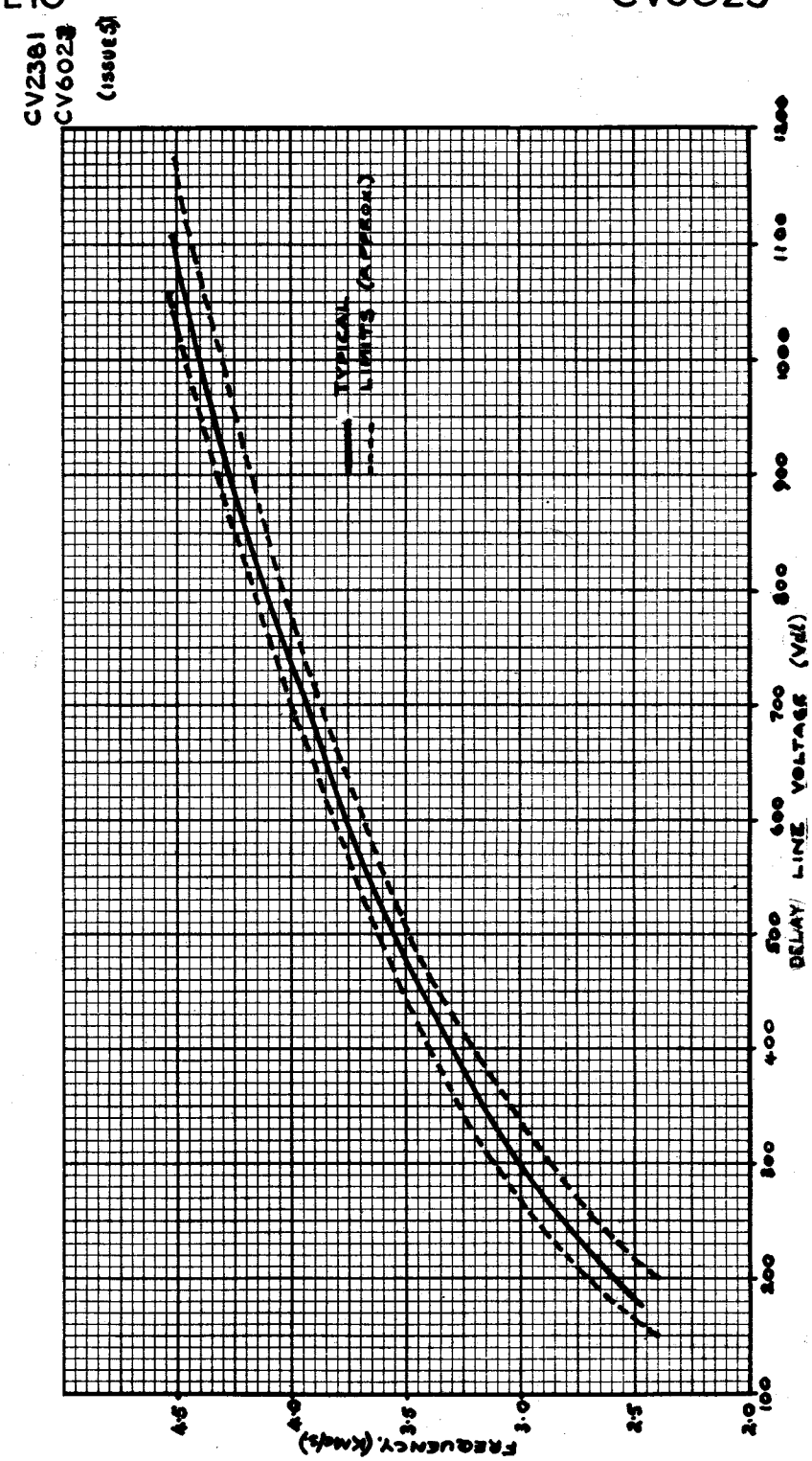
CV2381
CV6023
(ISSUE 5)
TYPICAL
LIMITS (APPROX)
DELAY LINE VOLTAGE (Vdl)
100
200
300
400
500
600
700
800
900
1000
1100
1200
FREQUENCY (KMc/s)
4.5
4.0
3.5
3.0
2.5
2.0

CV6024

VALVE ELECTRONIC

ADMIRALTY SURFACE WEAPONS ESTABLISHMENT

Specification AD/CV6024.
Issue 4 Dated 31. 8. 61.
To be read in conjunction with K1001, BS.448 and BS.1409.

SECURITY

Specification	Valve
Unclassified	Unclassified

TYPE OF VALVE: Voltage Tuned Oscillator (X-band) with Electro-Magnet.
CATHODE: Indirectly heated.
ENVELOPE: Glass enclosed in a metal shell.
PROTOTYPE: VX2507, C043.

MARKING

See K1001. Issue 5. The serial number and the optimum working current level (see Note 2) for the solenoid shall be clearly indicated on the shell of the valve.

BASE

A7 - 13 (See Note H on page 2)

RATING

(All limiting values are absolute)

			Note
Heater Voltage (Nom.)	(V)	6.3	A
Max. Heater Current	(A)	2.5	
Surge Heater Current	(A)	4.0	
Max. Solenoid Voltage	(Vd.c.)	24.0	B
Max. Solenoid Current	(A)	7	B
Min. Delay Line Voltage	(V)	300	C
Max. Delay Line Voltage	(V)	1500	C
Max. Delay Line Current	(mA)	35	D
Max. Delay Line Dissipation	(W)	50	
Max. Anode Voltage	(V)	300	
Max. Anode Current	(mA)	10	
Max. Negative Grid Voltage	(V)	250	E
Min. Total Tuning Range	(Mc/s)	7000 to 11500	G
Min. Power Output.	(mW)	20	

CONNECTIONS

Pin	Electrode	
1	Heater	h
2	Cathode	k
3	Anode	a
4	Grid	g
5	Delay line and Collector	dl
6	As for Pin 5	dl
7	Heater	h

Solenoid (A.P.208600)

A Negative supply.
B Positive supply.

The power output terminal at the valve is an approved type N socket for Connection to a 50 ohm coaxial line plug J.S.No. 5935-99-940-1095. See Note J.

DIMENSIONS

See drawings on page 9 .

NOTES

A. The heater voltage shall be applied at least two minutes before the application of the H.T. voltages.

NOTES (Cont'd.)

B. The magnetic field required to focus the electron beam is provided by a solenoid, which is an integral part of the valve. The optimum value of solenoid current for each valve will be stated and marked on each valve by the manufacturer. The value of this current will lie between 3-7 amps, for which a d.c. supply voltage of 16 min. to 24 max. is necessary. If the stability of the solenoid current (including transients, temperature effects etc.) is worse than ± 0.05 amps about the stated value, then variations in the output frequency (greater than 2 Mc/s) can be expected, accompanied by appreciable variations in power and noise output. Permanent magnets should be kept at least 12" away from valves during operation if deleterious effects are to be avoided.

Electro-magnets, transformers etc., and non-magnetised ferrous materials should be kept at least 6" away from valves during operation if deleterious effects are to be avoided.

C. In all cases the solenoid and delay line voltages must be applied before the anode voltage.

D. The delay line and collector are connected inside the valve, and therefore the "delay line current" includes collector current.

E. For normal operation the grid is set at zero volts. At V_g = - 100 volts oscillations are cut-off.

F. The temperature at any point on the external surface of the metal shell must not be allowed to exceed 120°C. Minimum air flow directed on to the radiating fins and side of the valve should be 50 cu. ft./min.

G. The valve is tuned by varying the delay line voltage (V_{dl}). The relationship between frequency and V_{dl} is approximately given by the curve shown on page 9. The valve oscillates at a frequency of 7000 Mc/s at V_{dl} not lower than 300V, and at a frequency of 11,500 Mc/s at V_{dl} not higher than 1,500 V.

H. The base is rigidly attached to the metal shell and its pins are connected to the valve terminals by flexible leads.

J. The output terminal and shell of the valve are intended to be operated at earth potential and are isolated from the delay line, other electrodes, and leads. The insulation resistance with 2kV d.c. applied is greater than 100 megohms. The insulation resistance between the solenoid and delay line, other electrodes and leads is also greater than 100 megohms with 2 kV d.c. applied. The insulation resistance between the solenoid and shell of the valve is greater than 20 megohms with 50V d.c. applied.

K. The Joint Service Catalogue No. is:-

5960-99-037-2120

CV6024

TESTS

To be performed in addition to those applicable in K1001.

Tests are to be performed in the specified order unless otherwise agreed with the Inspecting Authority.

Test conditions - unless otherwise stated:-

V_h (V)	V_g (V)	V_a (V)	Cooling	v.s.w.r.
6.3 a.c.	0	V_o (Note 1)	(Note 2)	◄1.2 : 1 (Note 3)

	Test	Test Conditions	AQL %	Insp. Level	Symbol	Limits Min.	Limits Max.	Units
a	Heater Current (After two minutes)	No voltages except V_h		100%	I_h	1.75	2.5	A
b	Vibration	Adjust V_{dl} for 9000 Mc/s Notes 4, 5 and 6.		T.A. and 10%				
	(i)Frequency Deviation	Note 7			$\pm \Delta F$	-	1	Mc/s
	(ii)Power Output Deviation				$\pm \Delta P_o$	-	5	%
	(iii)Carrier to Noise Ratio	Note 8			C/N	150	-	dB/c.p.s.
c	Vibration	Adjust V_{dl} for 7000 and 11500 Mc/s. Notes 4, 5 and 9.		T.A.				
	Frequency Deviation				$\pm \Delta F$	-	1	Mc/s
d	Oscillation at 7000 Mc/s	Adjust V_{dl} for 7000 Mc/s. Notes 4 and 10.		100%				
	(i)Delay line Voltage				V_{dl}	300	350	V
	(ii)Delay line Current				I_{dl}	-	25	mA
	(iii)Anode Current				I_a	-	10	mA
	(iv)Power Output				P_o	20	-	mW
e	Oscillation at 9000 Mc/s	Adjust V_{dl} for 9000 Mc/s Notes 4 and 10.		100%				
	(i)Delay line Voltage				V_{dl}	580	700	V
	(ii)Power Output				P_o	20	-	mW
f	Oscillation at 11500 Mc/s	Adjust V_{dl} for 11500 Mc/s. Notes 4 and 10.		100%				
	(i)Delay line Voltage				V_{dl}	1300	1500	V
	(ii)Delay line Current				I_{dl}	-	35	mA
	(iii)Anode Current				I_a	-	10	mA
	(iv)Power Output				P_o	20	-	mW
g	Anode Modulation	Adjust V_{dl} for 7000, 9000 and 11500 Mc/s. Adjust V_a from V_o to V_o - 100V. Notes 4 and 11.		100%				
	Ratio of max. to min. values of Power Output.				$\frac{P_o(Max.)}{P_o(Min.)}$	3.5	-	

TESTS (CONT'D)

To be performed in addition to those applicable in K1001.

Tests are to be performed in the specified order unless otherwise agreed with the Inspecting Authority.

Test conditions - unless otherwise stated:-

V_h (V)	V_g (V)	V_{g2} (V)	V_{g3} (V)	V_{g4} (V)	V_a (V)	Cooling	v.s.w.r.
6.3 a.c.	0				V_o (Note 1)	(Note 2)	< 1.2 : 1 (Note 3)

	Test	Test Conditions	AQL %	Insp. Level	Symbol	Limits Min.	Limits Max.	Units
h	Grid Characteristics							
	(i) Cut-off	V_g= - 100V V_{d1}=Adjust from 300V to 1500V.		100%	P_o	-	0	mW
	(ii) Power Output	V_g= - 60V V_{d1}=Adjust from 300V to 1500V.			P_o	-	20	mW
	(iii) Slope	V_g= Varied from - 100V to zero V. V_{d1} = 1500V.			$\frac{\Delta P_o}{\Delta V_g}$	Must always be positive		mW/V
j	Grid Insulation Grid Current Record	V_g=Adjust for $I_{d1}+I_a$ = 10mA. Then reduce to zero V_{d1} = 1500V.		100%	$I_g(1)$	-	30	µA
k	Vacuum Test	V_g = as for test j V_{d1} = 1500V Note grid current [I_g (2)] I_g (2)-I_g (1)		100%	ΔI_g	-	10	µA
l	Grid Pulse Modulation	V_g =pulsed from cut-off value to zero V. Pulse length=0.2µsecs. (nom.) at 1000 p.p.s. V_{d1}=Adjust for 900 Mc/s Note 4.		T.A.				
	Peak Power Output [P(pk)] Record C.W. Power Output [P_o(1)] Record	$\frac{P_o(1) - P(pk)}{P_o(1)}$			-	-	20	%
m	Valve Noise	Adjust V_{d1} for all frequencies 7000 to 11500 Mc/s. Notes 8 and 12.		100%				
	Carrier to Noise Ratio				C/N	150	-	dB/cps

CV6024

TESTS (CONT'D)

To be performed in addition to those applicable in K1001.

Tests are to be performed in the specified order unless otherwise agreed with the Inspecting Authority.

Test conditions - unless otherwise stated:-

V_h (V)	V_g (V)	V_a (V)	Cooling	v.s.w.r.
6.3 a.c.	0	V_o (Note 1)	(Note 2)	< 1.2 : 1 (Note 3)

	Test	Test Conditions	AQL %	Insp. Level	Sym-bol	Limits Min.	Limits Max.	Units
n	Stability	V_{dl} adjusted. I (solenoid) set to value best suited to particular valve (Note 2) plus 0.05 and less 0.05 amps in turn.		T.A.				
	(i)Power Output				P_o	20	-	mW
	(ii) Frequency Deviation. At 7000, 8000 9000, 10,000 and 11,500 Mc/s. Note 4.				ΔF	-	±2	Mc/s
	(iii)Carrier to Noise Ratio.				C/N	150	-	dB/cps
p	Frequency Pulling at 7000, 9000 and 11500 Mc/s.	Adjust V_{dl} for test frequencies. Notes 4 and 13.		100%	ΔF	-	8	Mc/s
q	Insulation Resistance	No operating voltages 2kV dc. applied between test electrode pin and shell.		100%				
	(i)Shell to Delay Line and Collector				R_{dl}	100	-	Megohms
	(ii)Shell to Cathode/Heater				R_k	100	-	Megohms
	(iii)Shell to Grid				R_g	100	-	Megohms
	(iv)Shell to Anode				R_a	100	-	Megohms
		2kV dc. applied between test electrode and solenoid.						
	(i)Solenoid to Delay Line and Collector				R_{dl}	100	-	Megohms
	(ii)Solenoid to Cathode/Heater				R_k	100	-	Megohms
	(iii)Solenoid to Grid				R_g	100	-	Megohms
	(iv)Solenoid to Anode				R_a	100	-	Megohms
		50V d.c. applied between solenoid and shell of valve.			R_s	20	-	Megohms

TESTS (CONT'D)

To be performed in addition to those applicable in K1001.

Tests are to be performed in the specified order unless otherwise agreed with the Inspecting Authority.

Test conditions - unless otherwise stated:-

V_h	V_g	V_a	Cooling	v.s.w.r.
(V)	(V)	(V)		
6.3 a.c.	0	V_o (Note 1)	(Note 2)	$<$1.2 : 1 (Note 3)

	Test	Test Conditions	AQL %	Insp. Level	Symbol	Limits Min.	Limits Max.	Units
r	Leakage Current Heater/Cathode Current.	No operating voltages. Note 14.		100%	I_{hk}	-	750	μA
s	Life Test	Adjust V_{dl} for 9000 Mc/s Notes 4 and 15.		T.A. and 2%	t P_o	500 10	- -	Hours mW

NOTES

1. V_o which must be within the limits 100-200 volts d.c. must be quoted on the data sheets supplied with each valve. V_o is a single fixed value of V_a which is compatible with tests (d), (e) and (f).

2. The valve must be air-cooled, the air at ambient temperature being directed onto the side of the metal shell and radiator. Air flow to be not greater than 50 cu. ft./min. The solenoid current shall be adjusted to the value best suited to the particular valve. This current must lie between the limits 3 - 7 amps. (Stabilised to ± 0.05A). All tests shall be carried out with another CV6023/4 placed alongside the valve under test, the main axes of the valves being parallel and the distance between the nearest points of the valves to be 6". The output socket of the valve undergoing test should be opposite the output socket of the second valve, which should also have its solenoid energised as for normal operation.

3. The input v.s.w.r. of the power and frequency measuring equipment must be less than 1.2 over the full μ-wave frequency range of 7000 - 11,500 Mc/s.

4. The frequency shall be set to within ± ½%.

5. The valves shall be mounted rigidly on a vibration table and while operating shall be vibrated with simple harmonic motion, in the direction of each of the three mutually perpendicular axes successively, at the following vibration frequencies and amplitudes:-

Vibration Frequency Range (c.p.s.)	Amplitude of Vibration (inches)
1 - 15	± 1/16
15 - 30	± 0.010
30 - 50	± 0.005
50 - 80	± 0.002
80 - 100	± 0.001

NOTES (CONT'D)

The vibration frequency range shall be continuously explored once. The rate of change of this frequency shall not exceed 20 c/s per minute.

6. One valve in ten shall be tested. In the event of failure, a second valve shall be vibrated. If this valve proves satisfactory, the batch shall be accepted; if unsatisfactory, the batch shall normally be rejected. At the discretion of the Government Authority concerned however, a rejected batch may be resubmitted for acceptance following a joint investigation by the contractor and the Government Authority. Valves satisfying this test, which is considered to be non-destructive, may be accepted as part of the order.

7. The test requirement is that frequency modulation of the RF output by the vibration shall not exceed ± 1 Mc/s at any frequency in the tuning range for the range of vibration frequencies tabulated under Note 5.

8. The heater supply shall be d.c. or rectified and smoothed a.c.

A broadband (non-balanced) mixer shall be used throughout noise tests. The noise output shall be indicated on a visual display. The following tests are to be made:-

(a) The ratio of signal to average noise over 10 Mc/s bandwidth centred at 60 Mc/s and 120 Mc/s shall not be less than 150 dB/c.p.s.

(b) The ratio of signal to average noise over a 20 kc/s bandwidth centred at 1.0 Mc/s shall be measured for record purposes only, and test results for all valves made available to the specifying authority. These measurements to be made at 7000, 9000 and 11,500 Mc/s only.

For all noise measurements the load v.s.w.r. shall be less than 1.5.

9. Additionally, if necessary valves shall be vibrated over the full carrier frequency range at any vibration frequency at which mechanical resonances are observed to occur. The value of ΔF must not, with these vibration frequencies, exceed ± 1 Mc/s at any carrier frequency in the range 7000 to 11,500 Mc/s.

10. The manufacturer is to supply with each valve:-

(i) A power output versus delay line voltage characteristic covering the range of frequencies 7000 - 11,500 Mc/s. The power output shall not be less than 20 mW at any frequency in this range.

(ii) A frequency versus delay line voltage characteristic covering the range of frequencies 7000 - 11,500 Mc/s. There must be no frequency discontinuities over this tuning range.

11. With each valve, the manufacturer is to supply anode modulation characteristics showing power output versus anode voltage for each test frequency.

12. The time taken in this test for each sweep over the carrier range of 7000 - 11,500 Mc/s shall not be less than two minutes.

NOTES (CONT'D)

13. The pulling frequency is the difference between the max. and min. frequencies recorded when a mismatch placed in the output section is varied through all phases. The v.s.w.r. of the mismatch shall normally lie between 1.5 - 1.6 at each μ wave frequency, but the manufacturer may, at his discretion, exceed a v.s.w.r. of 1.6, during this test.

A curve showing variations in frequency pulling over the tuning range shall be recorded for each valve. Measurements shall be made at delay line voltages separated by intervals of 40V from V_{dl} = 300 to V_{dl} = 700V, and by intervals of 60 volts from V_{dl} = 700V to V_{dl} = 1420V. This information must be made available to the specifying authority.

14. The maximum permissible leakage current to apply in this case for the Heater/Cathode Leakage Test (K1001 para. 5.3) shall be 750 μA.

15. The life of a valve shall be considered to be terminated when, at any frequency in the range 7000 - 11,500 Mc/s, the power output falls below 10 mW, and the performance of the valve falls outside any of the limits specified in all other tests except test (b).

The test and release sequence, and the procedure to be adopted in the event of failure in life testing, will be decided by the purchasing authority. For production contract orders of less than 50 valves, the quantity of valves for life tests shall be decided by the purchasing authority.

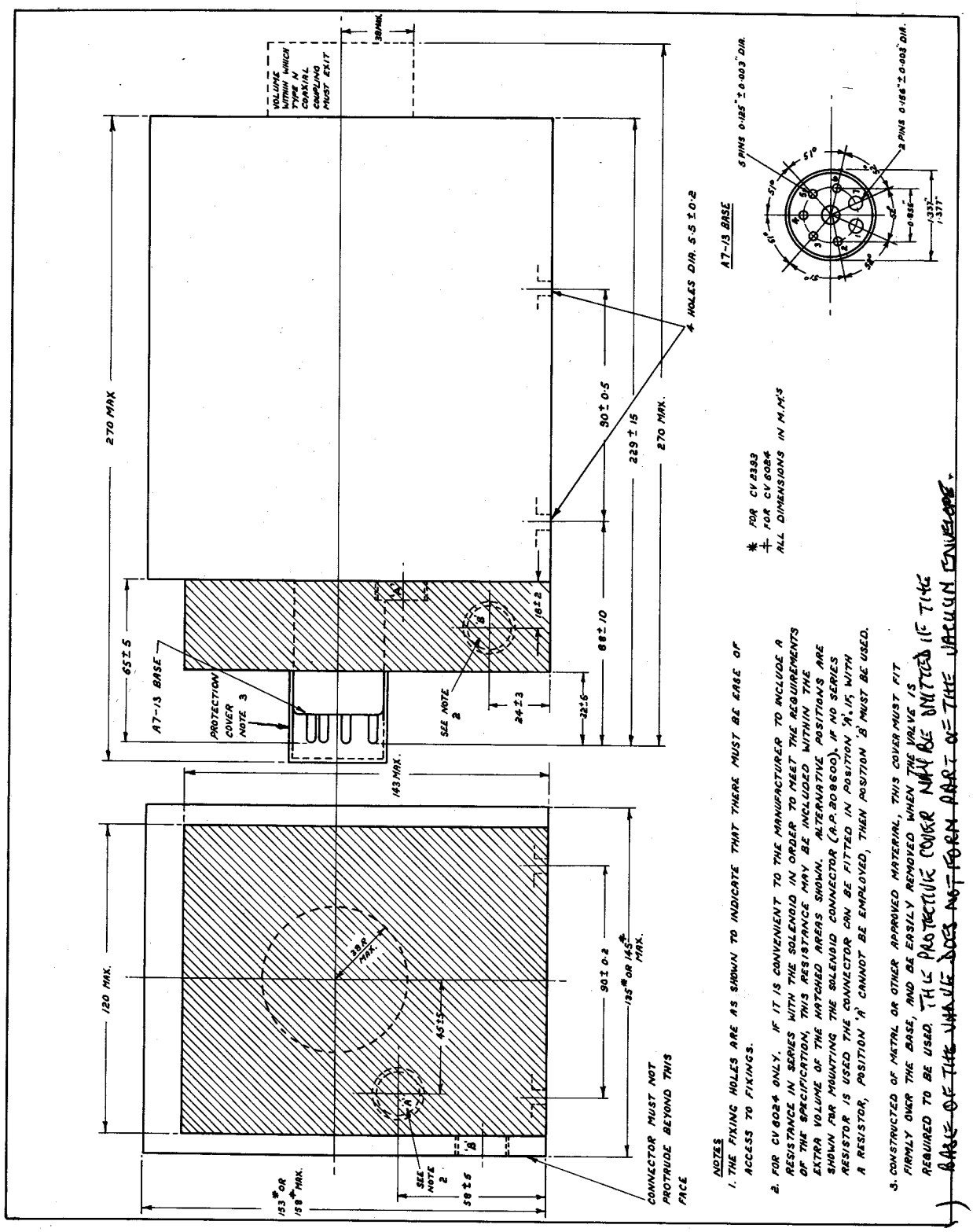

NOTES

1. THE FIXING HOLES ARE AS SHOWN TO INDICATE THAT THERE MUST BE EASE OF ACCESS TO FIXINGS.
2. FOR CV6024 ONLY. IF IT IS CONVENIENT TO THE MANUFACTURER TO INCLUDE A RESISTANCE IN SERIES WITH THE SOLENOID IN ORDER TO MEET THE REQUIREMENTS OF THE SPECIFICATION, THIS RESISTANCE MAY BE INCLUDED WITHIN THE EXTRA VOLUME OF THE HATCHED AREAS SHOWN. ALTERNATIVE POSITIONS ARE SHOWN FOR MOUNTING THE SOLENOID CONNECTOR (A.P. 208600). IF NO SERIES RESISTOR IS USED THE CONNECTOR CAN BE FITTED IN POSITION 'A', IF A RESISTOR IS EMPLOYED, THEN POSITION 'A' CANNOT BE EMPLOYED, THEN POSITION 'B' MUST BE USED.
3. CONSTRUCTED OF METAL OR OTHER APPROVED MATERIAL, THIS COVER MUST FIT FIRMLY OVER THE BASE, AND BE EASILY REMOVED WHEN THE VALVE IS REQUIRED TO BE USED. THE PROTECTIVE COVER MAY BE UNITED IF THE BASE OF THE VALVE DOES NOT FORM PART OF THE VACUUM ENVELOPE.

* FOR CV2353
† FOR CV6024
ALL DIMENSIONS IN M.M'S

CV2398
CV6024
(Issue 4)

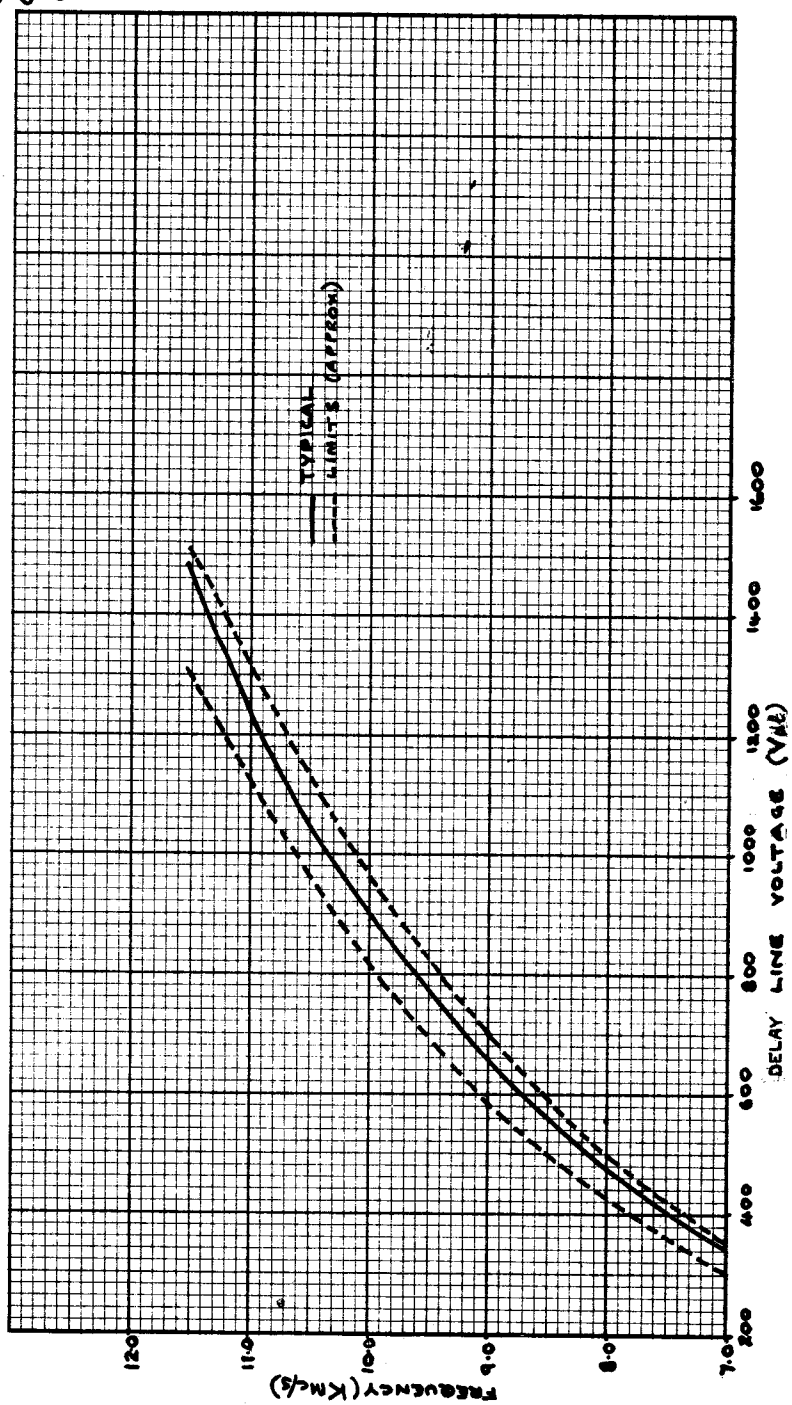

MINISTRY OF AVIATION - DLRD/RRE

VALVE ELECTRONIC **CV6026**

Specification MOA/CV6026
Issue 1C dated 28th May 1964
To be read in conjunction with K1001

SECURITY	
Specification	Valve
Unclassified	Unclassified

TYPE OF VALVE - Pulse hydrogen thyratron.
CATHODE - Unipotential, connected to mid point of heater.
ENVELOPE - Glass.
PROTOTYPE - VX3250

MARKING

K1001/4
Serial No.

RATING

(Net for Inspection purposes)

		Notes
Cathode heater voltage (VRMS)	-	B,M
Reservoir heater voltage (VRMS)	5.0 ± 7½%	M
Cathode heater current, Vh = 12V (A)	31	
Reservoir heater current, Vr = 5V. (A)	4.15	
Max. peak anode voltage, (Va) (kV)	25	H
Max. peak anode current, (Ia) (A)	2000	P
Max. (½Va x Ia x PRF) (MW.c/s)	10,000	G
Max. mean anode current (A)	3	B
Max. rate of rise of anode current (A/µs)	7,500	C
Min. Grid trigger voltage (V)	1,000	F,R
Max. grid negative bias (V)	110	R
Max. pulse length at max.peak Current (µs)	5	P
Max. pulse repetition frequency (pps)	1,500	Q
Min. heating time for cathode and reservoir heater before application of anode voltage (Minutes)	10	E

CHARACTERISTIC

Typical anode delay time (µs)	0.45	R
Max. anode delay time (µs)	0.7	R
Typical anode delay time drift (mµs)	30	R,N
Max. anode delay time drift (mµs)	100	R,N
Approximate jitter (mµs)	2	R,N

TOP CAP

See Fig 5 Page 9

FLYING LEAD CONNECTIONS

COLOUR	ELECTRODE
Black	Cathode (HCT)
Yellow, Yellow	Heaters for Cathode
Red, Brown	Heater for reservoir
Blue	Baffle
White	Grid
TC	Anode. See Note D

DIMENSIONS (INCHES)

Max. overall length excluding F/L	17 5/16
Max. glass dia. excluding pip	5½
Max. mounting dia.	6 1/32

See Fig 5 Page 9

MOUNTING POSITION

With anode uppermost, the axis of the valve shall be within 90° of the vertical

COOLING

See Note A.

JOINT SERVICE CATALOGUE NO.

5960-99-037-2142

A. The temperature of the anode cooler one inch from the free end, as shown by the temperature indicating point shall not exceed 90°C to ensure that the glass-to metal seal does not exceed 140°C.

As an indication, when the valve is operating under the conditions specified for the tests on page 4, and when the inlet air temperature is 40°C the air flow required is about 12 cu. ft. per minute. Under these conditions the pressure is about 1½ inches head of water.

B. During the cathode warm up, the cathode heater voltage should be 12V ± 7½%. After application of anode voltage the cathode heater voltage should be adjusted to a value inside the dashed lines in Fig. 1 on page 7, corresponding to the mean power supply current. This adjustment should be made not less than 5 minutes and not more than 15 minutes after reaching the required mean power supply current.

C. Defined as the maximum instantaneous rate of rise of current, i.e. di/dt max. and measured with a mutual inductor in the anode lead.

D. No part of the attached anode lead shall be within 1" of the glass envelope.

E. For ambient temperatures in the range + 50°C to + 70°C. For ambient temperatures in the range of 0°C to + 5°C the time should be increased to 15 minutes and for ambient temperatures in the range - 5°C to 0°C the time should be increased to 20 minutes.

F. Refers to the unloaded trigger pulse measured with respect to cathode potential.

G. This rating applies, providing the inverse voltage during the first microsecond following the pulse does not exceed K x Va, where K is a constant and has the value 0.18.

H. The anode voltage must be raised gradually. The time taken to reach 18kV must be not less than 30 seconds and to reach 25kV not less than 120 seconds.

M. It is recommended that the cathode heater and reservoir heater be supplied from separate transformers.

N. At the expense of increasing the anode delay time, the unloaded trigger pulse may be reduced to a value within the range 500 - 1000V, as shown in Fig. 3 on page 8. The anode delay time drift, and jitter are both unaltered.

P. For Pulse lengths greater than 5 us the peak current rating is reduced in the proportion 5/tp where tp is the pulse length in microseconds.

Q. Higher PRFs may be used at suitably reduced anode voltages.

R. The pulse generator must have the following characteristics:-

Unloaded trigger pulse:- 1000 volts, minimum
Rate or rise of unloaded trigger pulse:- 2 - 4 kV/us.
Unloaded trigger pulse duration:- 2 - 4 us.
Source impedance of trigger:- 200 ohms, maximum
DC resistance:- 500 ohms, maximum.

With the tube operating under equipment condition, the DC bias, measured across the decoupling capacitor C2 shall be 100 ± 10V negative.

The pulse generator must be connected to the valve through the resistance condenser network shown in Fig.2 on page 7.

NOTES (Cont'd)

The valve will operate at full voltage with zero bias in circuits where the recovery time requirements are not stringent.

S. In the event of an arc-over in the thyratron for any reason, the grid will remain at cathode potential whilst any substantial anode current is flowing. The grid bias circuit should therefore be designed to withstand the consequent current drain without damage.

TESTS

To be performed in addition to those applicable in K1001, and to be carried out after a holding period of 96 hours, see Note 9.

Tests, Note 2	Test Conditions, Notes 1,3				Units	Limits		Notes
	T	Vh	VR	Va		Min	Max	
GROUP A, 100% inspection								
(a) HT run up time.	0	12	5.0	-		-	-	4,7
	10	12	5.0	Raise to 18	Secs	-	30	
	10+	12	5.0	Raise to 25	Secs	-	120	
(b) Anode delay time (1)	15	12	5.0	25	µs	-	0.70	4,5,7
(c) Run (1)	17	7.5	5.0	25	-	-	-	4,7
(d) Jitter	25-30	7.5	5.0	25	mus	-	5	4,7
(e) Run (2)	30	7.5	5.4	25	-	-	-	4,7
(f) Anode delay time (2)	35	7.5	5.4	25	µs	Record		4,5,7
(g) Run (3)	36	7.5	4.6	25	-	-	-	4,7
(h) Maximum di/dt	41	7.5	4.6	25	A/µs	6000	-	4,7,8
(j) Anode delay time (3)	42	7.5	4.6	25	µs	Record		4,5,7
(k) - - -	43	12	5.0	0	-	-	-	-
(l) Cathode heatercurrent	53	12	5.0	0	A	28	34	-
(m) Reservoir heater current	54	12	5.0	0	A	3.7	4.6	-
(n) Anode delay time drift	-	-	-	-	mµs	-	100	10
GROUP B,C,D,E no tests								
GROUP F								
(p) Life (1) information	-	7.5	5	25	hours	500	-	4,6,12
(q) Life (2) information	-	7.5	5	25	hours	500		6,11,12

NOTES

1. The units for the test conditions are, T in minutes, Vh and VR in RMS volts, and Va in peak kilovolts. The commencement of test (a) shall be at time T = o.

2. The tests a - n shall be performed continuously and in the sequence shown.

3. The cathode heater and reservoir heater voltages should be measured at the tag ends of the appropriate leads.

4. The valve must be tested in the circuit shown in fig.4.
The pulse generator shall have the following characteristics:-
Unloaded trigger pulse:- 1000 volts maximum
Rate of rise of unloaded trigger pulse:- 2 - 4 Kv/µs.
Unloaded trigger pulse duration:- 2us maximum
Source impedance: 200 ohms minimum.
DC resistance: 500 ohms minimum.
With the tube operating, the DC bias measured across the bias decoupling capacitor C2 shall be 100 ± 10V negative.

   The anode circuit constants shall be chosen so that at Va peak = 25 kV, Peak Anode Current = 2,000 Amps Minimum, Mean Power Supply Current = 2.5 Amps Minimum, Pulse Length = 3.1 ± 0.2 usec, Pulse Recurrence Rate = 400 ± 10%. In addition L4 shall be adjusted to give 7,500 ± 5% amps. per microsecond rate of rise of peak anode current. The adjustment shall be made using a CV6026 valve in which the gas pressure can be varied. The rate of rise of current is measured as a function of gas pressure. Above a certain pressure the rate of rise is determined predominantly by the circuit inductance. L4 should be adjusted to give 7,500 ± 5% A/µsec at this pressure.

   The value of L5 shall be such as to give resonant charging.

   The circuit constants shall be adjusted so that the inverse voltage is at least K x Va for a period of ½ microsecond (min) in the first microsecond following the pulse, where K = 0.18.

5. Anode delay time is defined as the time interval between the rising portion of the grid pulse which is not more than 26% of the maximum unloaded pulse amplitude and the point where anode conduction takes place.

6. The valve shall be deemed to have reached the end of life when it fails to meet any of the requirements of tests a to n inclusive. Tests shall be made at intervals not exceeding 250 hours.

7. During HT run up time (test a), tripping is permissible. Subsequently the valve is not allowed to trip more than once. Should one trip occur, the HT must be re-applied at 25 kV within three seconds and the tests continued in sequence.

8. The rate of rise of anode current dia/dt shall be measured by means of a mutual inductor in the anode lead of the thyratron.

9. All valves shall be stored for at least 96 hours, during which no voltages shall be applied.

10. Anode delay time drift is the greatest difference between the anode delay times measured in tests (b), (f), (j).

NOTES (Cont'd)

11. The valve must be tested in the circuit shown in fig. 4.
The pulse generator shall have the following characteristics:-
Unloaded trigger pulse:- 1000 volts maximum
Rate of rise of unloaded trigger pulse:- 2 - 4 Kv/μs.
Unloaded trigger pulse duration:- 2us maximum
Source impedance:- 200 ohms minimum.
DC resistance: 500 ohms minimum

With the tube operating, the DC bias measured across the bias decoupling capacitor C2 shall be 100 ± 10V negative.

The anode circuit constants shall be chosen so that at Va peak = 25 kV, Peak Anode Current = 833 Amps Minimum, Mean Power Supply Current = 2.5 Amps Minimum, Pulse Length = 12 ± 0.5 usec, Pulse Recurrence Rate = 250 ± 10%. In addition L4 shall be adjusted to give 7,500 ± 5% amps. per microsecond rate of rise of peak anode current. The adjustment shall be made using a CV6026 valve in which the gas pressure can be varied. The rate of rise of current is measured as a function of gas pressure. Above a certain pressure the rate of rise is determined predominantly by the circuit inductance. L4 should be adjusted to give 7,500 ± 5% Aμsec at this pressure.

The value of L5 shall be such as to give resonant charging.

The circuit constants shall be adjusted so that the inverse voltage is at least K x Va for a period of $\frac{1}{2}$ microsecond (min) in the first microsecond following the pulse, where K = 0.18.

12. For Qaulification Approval, two valves for each life test shall have exceeded 2000 hours.

Fig 1

CATHODE HEATER VOLTS AGAINST
MEAN POWER SUPPLY CURRENT (SEE NOTE B)

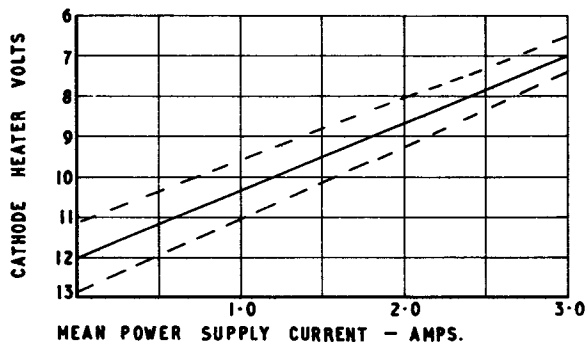

Fig 2

TRIGGERING CIRCUIT (SEE NOTE R)

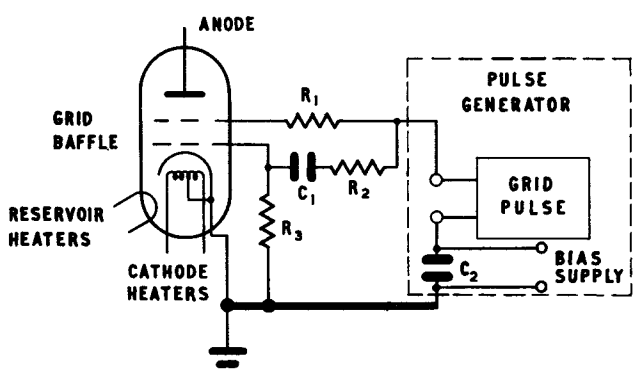

C_1 = ·005 μF ± 10 %, WORKING VOLTAGE 1000 V.
$R_1 = R_2 = R_3 = 500\,\Omega$ ± 10 %.

Fig 3

TYPICAL ANODE DELAY TIME AGAINST UNLOADED TRIGGER VOLTS.
(200 OHMS SOURCE IMPEDANCE, 0·5 μsec RISE TIME)

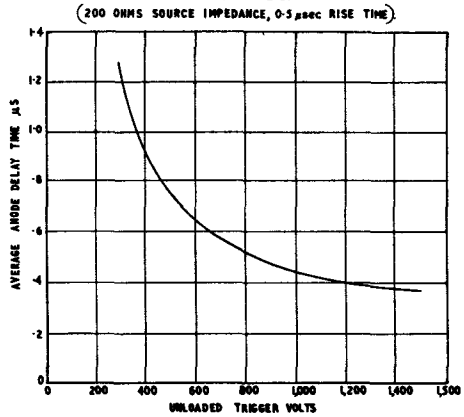

Fig 4

OPERATION TEST CIRCUIT (SEE NOTE 4.)

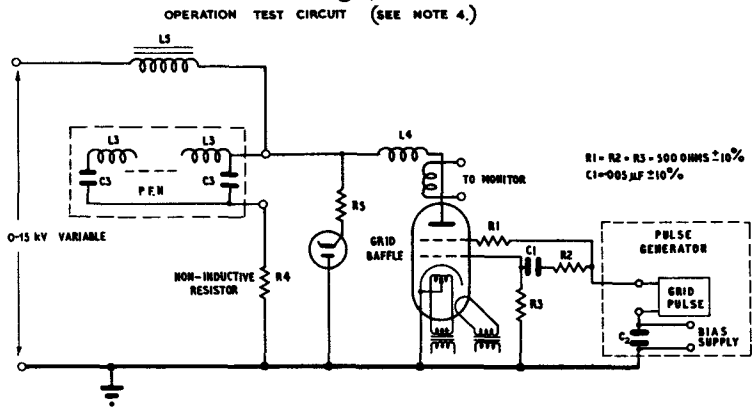

DIMENSIONAL OUTLINE

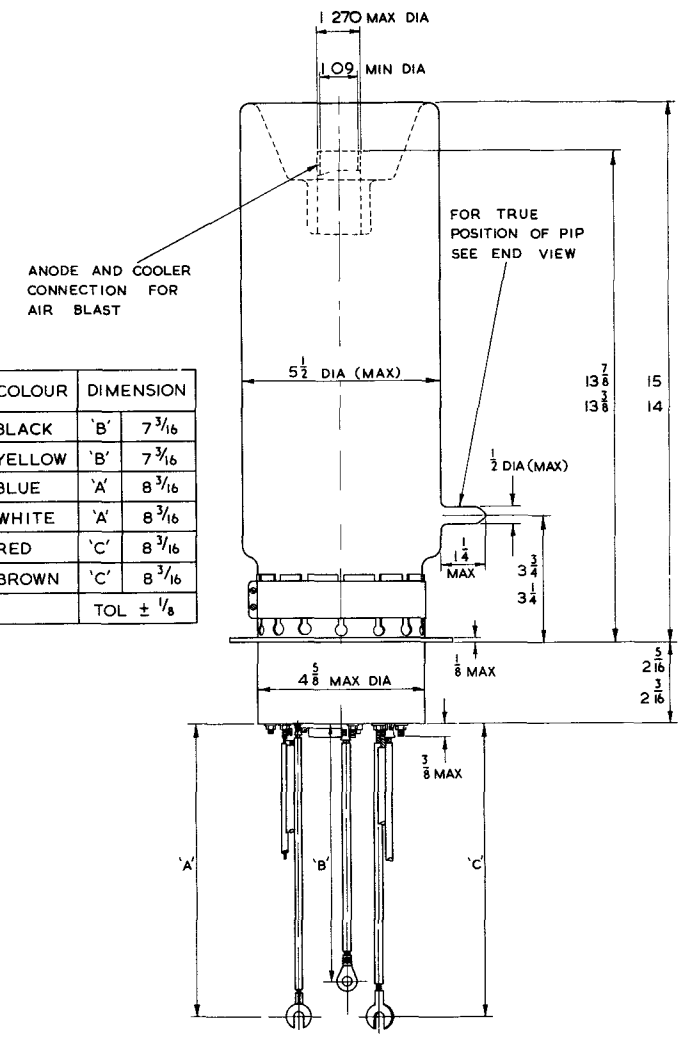

No	LEAD	COLOUR	DIMENSION	
1	CATHODE	BLACK	'B'	7 3/16
2	HEATERS	YELLOW	'B'	7 3/16
3	BAFFLE	BLUE	'A'	8 3/16
4	GRID	WHITE	'A'	8 3/16
5	RESERVOIR	RED	'C'	8 3/16
6	RESERVOIR	BROWN	'C'	8 3/16
			TOL ± 1/8	

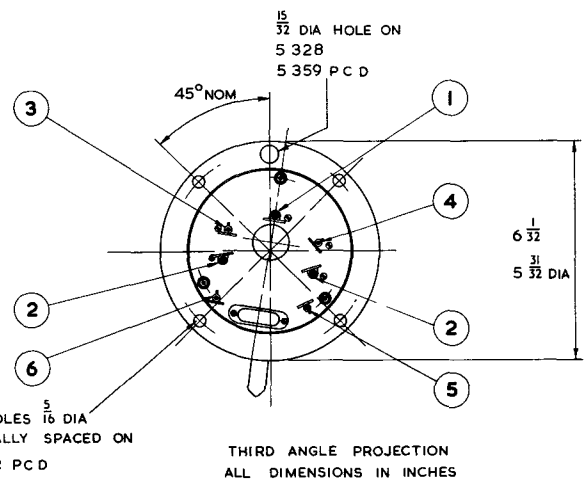

THIRD ANGLE PROJECTION
ALL DIMENSIONS IN INCHES

CV6026

MINISTRY OF AVIATION - DLRD/RRE

VALVE ELECTRONIC

Specification MOA/CV6026
Issue 1B dated 5th November, 1962.
To be read in conjunction with K1001.

SECURITY	
Specification	Valve
Unclassified	Unclassified

→ DENOTES A CHANGE

TYPE OF VALVE - Pulse hydrogen thyratron.
CATHODE - Unipotential, connected to mid point of heater.
ENVELOPE - Glass
PROTOTYPE - VX3250.

MARKING

K1001/5
Serial No.

RATING

			Notes
Cathode heater voltage	(VRMS)	-	B,M
Reservoir heater voltage	(VRMS)	5.0 ± 7½%	M
Cathode heater current, Vh = 12V	(A)	31	
Reservoir heater current, Vr = 5V.	(A)	4.15	
Max. peak anode voltage, (Va)	kV	25	H
Max. peak anode current, (Ia)	(A)	2000	P
Max. (½Va x Ia x PRF)	(MW.c/s)	10,000	G
Max. mean anode current	(A)	3	B
Max. rate of rise of anode current	A/us	7,500	C
Min. Grid trigger voltage	(V)	1000	F,R
Max. grid negative bias	(V)	110	R
Max. pulse length at max. peak Current	(us)	5	P
Max. pulse repetition frequency	(pps)	1500	Q
Min. heating time for cathode and reservoir heaters before application of anode voltage	(Minutes)	10	E

DATA

Typical anode delay time	(us)	0.45	R
Max. anode delay time	(us)	0.7	R
Typical anode delay time drift	(mus)	30	R,N
Max. anode delay time drift	(mus)	100	R,N
Approximate jitter	(mus)	2	R,N

TOP CAP

See Fig 5 on Page 9.

FLYING LEAD CONNECTIONS

COLOUR	ELECTRODE
Black	Cathode (HCT)
Yellow)	Heaters for
Yellow)	Cathode
Red)	Heater for
Brown)	reservoir
Blue	Baffle
White	Grid
TC	Anode. See Note D

DIMENSIONS (INCHES)

Max overall length excluding F/L) 17 5/16

Max glass dia excluding pip) 5½

Max mounting flange dia) 6 1/32

See Fig 5 Page 9.

MOUNTING POSITION

With anode uppermost, the axis of the valve shall be within 90° of the vertical

COOLING

See Note A

JOINT SERVICE CATALOGUE NO

5960-99-037-2142

NOTES

A. The temperature of the anode cooler one inch from the free end, as shown by the temperature indicating point shall not exceed 90° C to ensure that the glass-to-metal seal does not exceed 140°C.

As an indication, when the valve is operating under the conditions specified for the tests on page 4, and when the inlet air temperature is 40°C the air flow required is about 12 cu. ft. per minute. Under these conditions the pressure is about 1½ inches head of water.

B. During the cathode warm up, the cathode heater voltage should be 12V ± 7½%. After application of anode voltage the cathode heater voltage should be adjusted to a value inside the dashed lines in Fig 1 on page 7, corresponding to the mean power supply current. This adjustment should be made not less than 5 minutes and not more than 15 minutes after reaching the required mean power supply current.

C. Defined as the maximum instantaneous rate of rise of current, i.e. di/dt max. and measured with a mutual inductor in the anode lead.

D. No part of theattached anode lead shall be within 1" of the glass envelope.

E. For ambient temperatures in the range + 5°C to + 70°C. For ambient temperatures in the range of 0° C to + 5°C the time should be increased to 15 minutes and for ambient temperatures in the range - 5°C to 0°C the time should be increased to 20 minutes.

F. Refers to the unloaded trigger pulse measured with respect to cathode potential.

G. This rating applies, providing the inverse voltage during the first microsecond following the pulse does not exceed K x Ea, where K is a constant and has the value 0.18.

H. The anode voltage must be raised gradually. The time taken to reach 18kV must be not less than 30 seconds and to reach 25kV not less than 120 seconds.

M. It is recommended that the cathode heater and reservoir heater be supplied from separate transformers.

N. At the expense of increasing the anode delay time, the unloaded trigger pulse may be reduced to a value within the range 500 - 1000V, as shown in Fig 3 on page 8 The anode delay time drift, and jitter are both unaltered.

P. For Pulse lengthsgreater than 5 us the peak current rating is reduced in the proportion 5/tp where tp is the pulse length in microseconds.

Q. Higher PRFs may be used at suitably reduced anode voltages.

R. The pulse generator must have the following characteristics:-

Unloaded trigger pulse:- 1000 volts, minimum
Rate of rise of unloaded trigger pulse:- 2 - 4 kV/us.
Unloaded trigger pulse duration:- 2 - 4 us.
Source impedance of trigger:- 200 ohms, maximum
DC resistance:- 500 ohms, maximum.

With the tube operating under equipment condition, the DC bias, measured across the decoupling capacitor C2 shall be 100 ± 10V negative.

The pulse generator must be connected to the valve through the resistance condenser network shown in Fig 2 on page 7.

NOTES continued

The valve will operate at full voltage with zero bias in circuits where the recovery time requirements are not stringent.

5. In the event of an arc-over in the thyratron for any reason, the grid will remain at cathode potential whilst any substantial anode current is flowing. The grid bias circuit should therefore be designed to withstand the consequent current drain without damage.

TESTS

To be performed in addition to those applicable in K1001, and to be carried out after a holding period of 96 hours, see Note 9.

Tests, note 2.	Test conditions, notes 1,3.				Units	Limits		Notes
	T	Vh	VR	Va		Min	Max.	
GROUP A, 100% inspection								
(a) HT run up time.	0	12	5.0	-		-	-	4,7.
	10	12	5.0	Raise to 18	Secs	-	30	
	10+	12	5.0	Raise to 25	Secs	-	120	
(b) Anode delay time (1)	15	12	5.0	25	us	-	0.70	4,5,7.
(c) Run (1).	17	7.5	5.0	25	-	-	-	4,7.
(d) Jitter.	25 - 30	7.5	5.0	25	mus	-	5	4,7.
(e) Run (2).	30	7.5	5.4	25	-	-	-	4,7
(f) Anode delay time(2).	35	7.5	5.4	25	us	Record		4,5,7
(g) Run (3).	36	7.5	4.6	25	-	-	-	4,7
(h) Maximum di/dt.	41	7.5	4.6	25	A/us	6000	-	4,7,8
(j) Anode delay time (3)	42	7.5	4.6	25	us	Record		4,5,7
(k) - - -	43	12	5.0	0	-	-	-	-
(l) Cathode heater current	53	12	5.0	0	A	28	34	-
(m) Reservoir heater current	54	12	5.0	0	A	3.7	4.6	-
(n) Anode delay time drift	-	-	-	-	mus	-	100	10
GROUP B,C,D,E no tests.								
GROUP F								
(p) Life (1) information	-	7.5	5	25	hours	500	-	4,6,12
(q) Life (2) information	-	7.5	5	25	hours	500		6,11,12

CV 6026

NOTES

1. The units for the test conditions are, T in minutes, Vh and VR in RMS volts, and Va in peak kilovolts. The commencement of test (a) shall be at time T = o.

2. The tests a - n shall be performed continuously and in the sequence shown.

3. The cathode heater and reservoir heater voltages should be measured at the tag ends of the appropriate leads.

4. The valve must be tested in the circuit shown in fig.5.
The pulse generator shall have the following characteristics:-
Unloaded trigger pulse:- 1000 volts maximum
Rate of rise of unloaded trigger pulse:- 2 - 4 Kv/us.
Unloaded trigger pulse duration:- 2us maximum.
Source impedance: 200 ohms minimum.
DC resistance: 500 ohms minimum.
With the tube operating, the DC bias measured across the bias decoupling capacitor C2 shall be 100 ± 10V negative.

The anode circuit constants shall be chosen so that at Va peak = 25 kV, Peak Anode Current = 2,000 Amps Minimum, Mean Power Supply Current = 2.5 Amps Minimum, Pulse Length = 3.1 ± 0.2 usec, Pulse Recurrence Rate = 400 ± 10%. In addition L4 shall be adjusted to give 7,500 ± 5% amps. per microsecond rate of rise of peak anode current. The adjustment shall be made using a CV6026 valve in which the gas pressure can be varied. The rate of rise of current is measured as a function of gas pressure. Above a certain pressure the rate of rise is determined predominantly by the circuit inductance. L4 should be adjusted to give 7,500 ± 5% A/usec at this pressure.

The value of L5 shall be such as to give resonant charging.

The circuit constants shall be adjusted so that the inverse voltage is at least K x Va for a period of ½ microsecond (min) in the first microsecond following the pulse, where K = 0.18.

5. Anode delay time is defined as the time interval between the rising portion of the grid pulse which is not more than 26% of the maximum unloaded pulse amplitude and the point where anode conduction takes place.

6. The valve shall be deemed to have reached the end of life when it fails to meet any of the requirements of tests a to n inclusive. Tests shall be made at intervals not exceeding 250 hours.

7. During HT run up time (test a), tripping is permissible. Subsequently the valve is not allowed to trip more than once. Should one trip occur, the HT must be re-applied at 25 kV within three seconds and the tests continued in sequence.

8. The rate of rise of anode current dia/dt shall be measured by means of a mutual inductor in the anode lead of the thyratron.

9. All valves shall be stored for at least 96 hours, during which no voltages shall be applied.

10. Anode delay time drift is the greatest difference between the anode delay times measured in tests (b),(f),(j).

NOTES (Contd.)

11. The valve must be tested in the circuit shown in fig. 4.
The pulse generator shall have the following characteristics:-
Unloaded trigger pulse:- 1000 volts maximum
Rate of rise of unloaded trigger pulse:- 2 - 4 Kv/μs.
Unloaded trigger pulse duration:- 2us maximum.
Source impedance:- 200 ohms minimum.
DC resistance: 500 ohms minimum.

With the tube operating, the DC bias measured across the bias decoupling capacitor C2 shall be 100 ± 10V negative.

The anode circuit constants shall be chosen so that at Va peak = 25 kV, Peak Anode Current = 833 Amps Minimum, Mean Power Supply Current = 2.5 Amps Minimum, Pulse Length = 12 ± 0.5 usec, Pulse Recurrence Rate = 250 ± 10%. In addition L4 shall be adjusted to give 7,500 ± 5% amps. per microsecond rate of rise of peak anode current. The adjustment shall be made using a CV6026 valve in which the gas pressure can be varied. The rate of rise of current is measured as a function of gas pressure. Above a certain pressure the rate of rise is determined predominantly by the circuit inductance. L4 should be adjusted to give 7,500 ± 5% Aμsec at this pressure.

The value of L5 shall be such as to give resonant charging.

The circuit constants shall be adjusted so that the inverse voltage is at least K x Va for a period of $\frac{1}{2}$ microsecond (min) in the first microsecond following the pulse, where K = 0.18.

12. For Qualification Approval, two valves for each life test shall have exceeded 2000 hours.

FIG. 1.

CATHODE HEATER VOLTS AGAINST MEAN POWER SUPPLY CURRENT (SEE NOTE B)

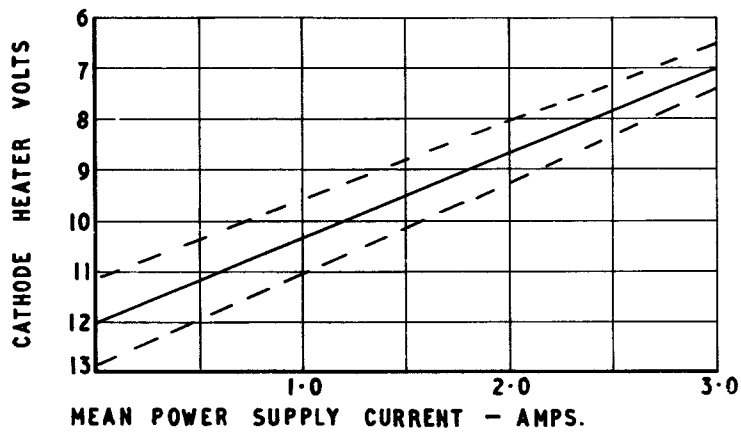

FIG. 2.

TRIGGERING CIRCUIT (SEE NOTE R)

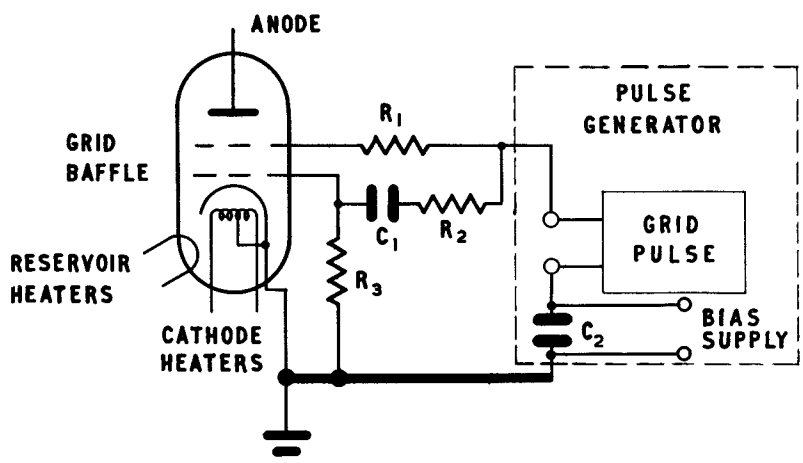

C_1 = ·005 μF ± 10 %, WORKING VOLTAGE 1000 V.

$R_1 = R_2 = R_3 = 500\,\Omega$ ± 10 %.

FIG. 3.
TYPICAL ANODE DELAY TIME AGAINST UNLOADED TRIGGER VOLTS.
(200 OHMS SOURCE IMPEDANCE, 0·5 μsec RISE TIME)

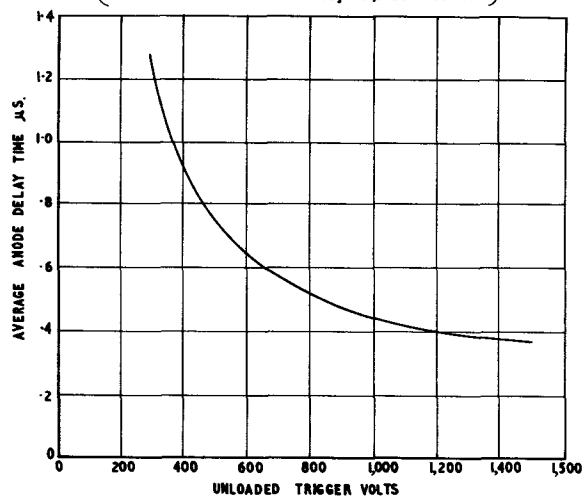

FIG. 4.
OPERATION TEST CIRCUIT (SEE NOTE 4.)

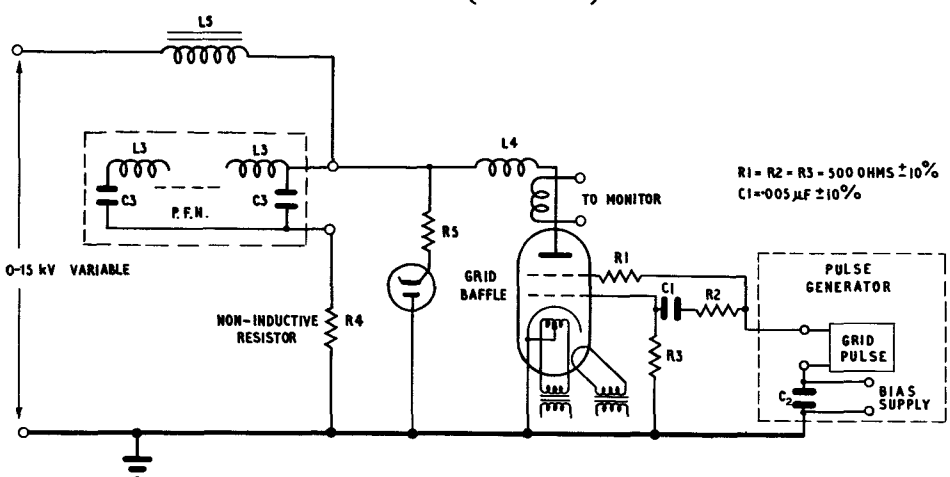

FIG 5.

DIMENSIONAL OUTLINE

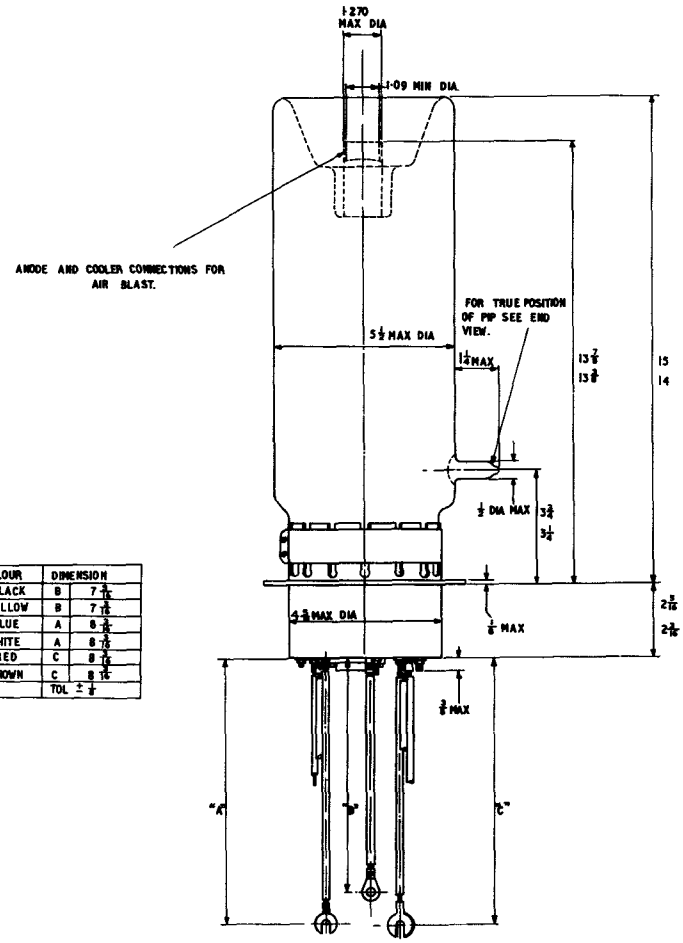

No	LEAD	COLOUR	DIMENSION	
1	CATHODE	BLACK	B	7 3/16
2	HEATERS	YELLOW	B	7 1/16
3	BAFFLE	BLUE	A	8 3/16
4	GRID	WHITE	A	8 1/16
5	RESERVOIR	RED	C	8 1/16
6	RESERVOIR	BROWN	C	8 1/16
			TOL ± 1/32	

THIRD ANGLE PROJECTION
ALL DIMS. IN INCHES

(AL3) THIS VALVE MAY BE RADIOACTIVE..

MINISTRY OF AVIATION - DLRD/RRE

VALVE ELECTRONIC

CV 6028

Specification MOA/CV6028 Issue 1 dated March 1959 To be read in conjunction with K1001	SECURITY Specification: Unclassified Valve: Unclassified

→ Indicates a change

TYPE OF VALVE - MICROWAVE GAS SWITCH (PRE TR CELL)
ENVELOPE - SILICA
PROTOTYPE - VX 9196

RATING

All limiting values are absolute

		Note
Operating Frequency range (k.Mc/s)	2-4	A
Max. Peak Power input (MW)	2.5	B
Max. Mean Power input (kW)	3	B
Max. pulse width (μS)	2.5	

MARKING

See K1001/4, except that the valve shall be marked CV Factory Identification and date code only.

DIMENSIONS

See Drawing on page 3

MOUNTING POSITION

Any (Note C)

PACKAGING

See K1005

NOTES

A. The valve may be used in a suitable waveguide mount at any frequency within this range. The bandwidth and matching are determined by the design of the mount.

B. The quoted power is that which is measured incident on a balanced duplexer where two valves are each operating across both arms of the duplexer.

C. The hole through which the tube is mounted should be 0.3576 inches ± 0.0005 inches diameter.

TYPICAL OPERATING CONDITIONS

Primary switch at 3kMc/s Balanced Duplexer

Two valves may be used side by side in a mount having a Q of 0.7 (see drawing on page 4). Applying a 1 μs pulse having peak power within the range 100 kW to 2.5 MW at 500 p.p.s gives a substantially constant leakage in the unbalanced output arm of 1.5 watts mean. The recovery time to 3 db is about 25 μs. For powers of 100 kW the arc loss is 0.2 db and for those in excess of 1 MW the arc loss is less than 0.1 db. Breakdown occurs at approximately 20 kW and at 2.5 MW the life expectation is 2000 hours.

Z.20421. JOINT SERVICE CATALOGUE NO 5960-037-0162. (AL 1)

TYPICAL OPERATING CONDITIONS (Cont'd)

Primary switch in W.G.11 Balanced Duplexer

A single valve when used across W.G.11 gives a VSWR of 1.1 at 3.3kMc/s. When irises 0.145" wide are used a bandwidth of 20% to a VSWR better than 1.05 can be obtained for an insertion loss less than 0.2 db.

Applying a 1.5 μs pulse of 600 kW peak power at 500 p.p.s. to the duplexer, the leakage into the unbalanced arm is approximately 18 W mean.

Primary switch at 3.3 k Mc/s Balanced Duplexer

Using a single valve in a mount of the cone and plate iris type having a Q of 2.6 and applying a 1.5/us pulse of 600 kW peak power at 500 p.p.s. gives a leakage of 3.2 W mean into the unbalanced arm.

TESTS

To be performed in addition to those applicable in K1001

TEST CONDITIONS

The valves shall be tested in an approved balanced duplexer in WG16. The maximum VSWR looking outwards from the balanced duplexer shall not exceed 1.2:1 on any arm.

tp (μsecs)	Du	f (kMc/s)
0.2 ± 10%	.0002 ± 10%	9.5 ± 0.5

K1001	TEST	TEST CONDITIONS	AQL %	INSP. LEVEL	SYM-BOL	LIMITS MIN.	LIMITS MAX	UNITS
	GROUP A Breakdown power	Adjust rf input power from a low value until the valve strikes Notes 1 and 2		100%		-	20	kW
	Recovery time to 3 db	Peak rf power input = 50 kW ± 10% Notes 1 and 2		100%		-	25	μSec
	GROUPS B, C and D omitted							
	GROUP E							
	Glass strain	No voltages	6.5	IA				
11.3	Fatigue	No voltages		IA				

K1001	Test	Test Conditions	AQL %	Insp. Level	Sym-bol	Limits Min.	Limits Max.	Units
	GROUP E (Cont'd)							
11.3	Fatigue (cont'd)	Frequency, any within range 40-200 c/s. Min. peak acceleration = 5g Duration = 96 hrs.						
11.4	Shock	No voltages Hammer angle = 30°		IA				
	Temperature Cycling	No voltages Three cycles between -50°C and 100°C		IA				
	Post Fatigue, Shock and Temperature Cycling tests							
	Breakdown power	As in Group A	4.0			-	20	kW
	GROUP F omitted							
	GROUP G Re-test after 28 days holding period							
	Breakdown power	As in Group A	1.0	100%		-	20	kW
	Recovery time	As in Group A	1.0	100%		-	25	μSec

NOTES

1. The power measured or quoted shall be that which is incident on the balanced duplexer.
2. The valve shall be moved up and down in the duplexer through all positions for which the ground length (see outline drawing) is completely through both waveguides.

OUTLINE DRAWING

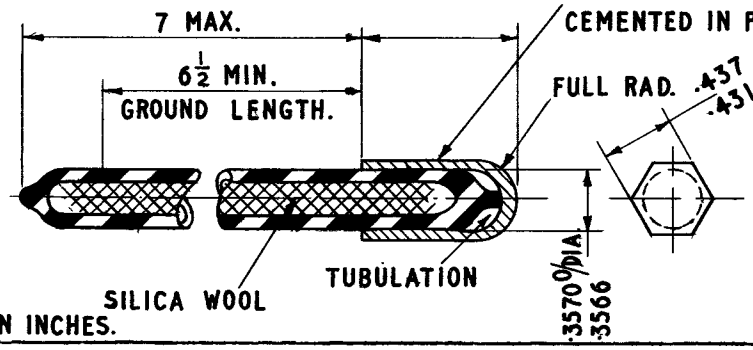

DIMENSIONS IN INCHES.

CV6028

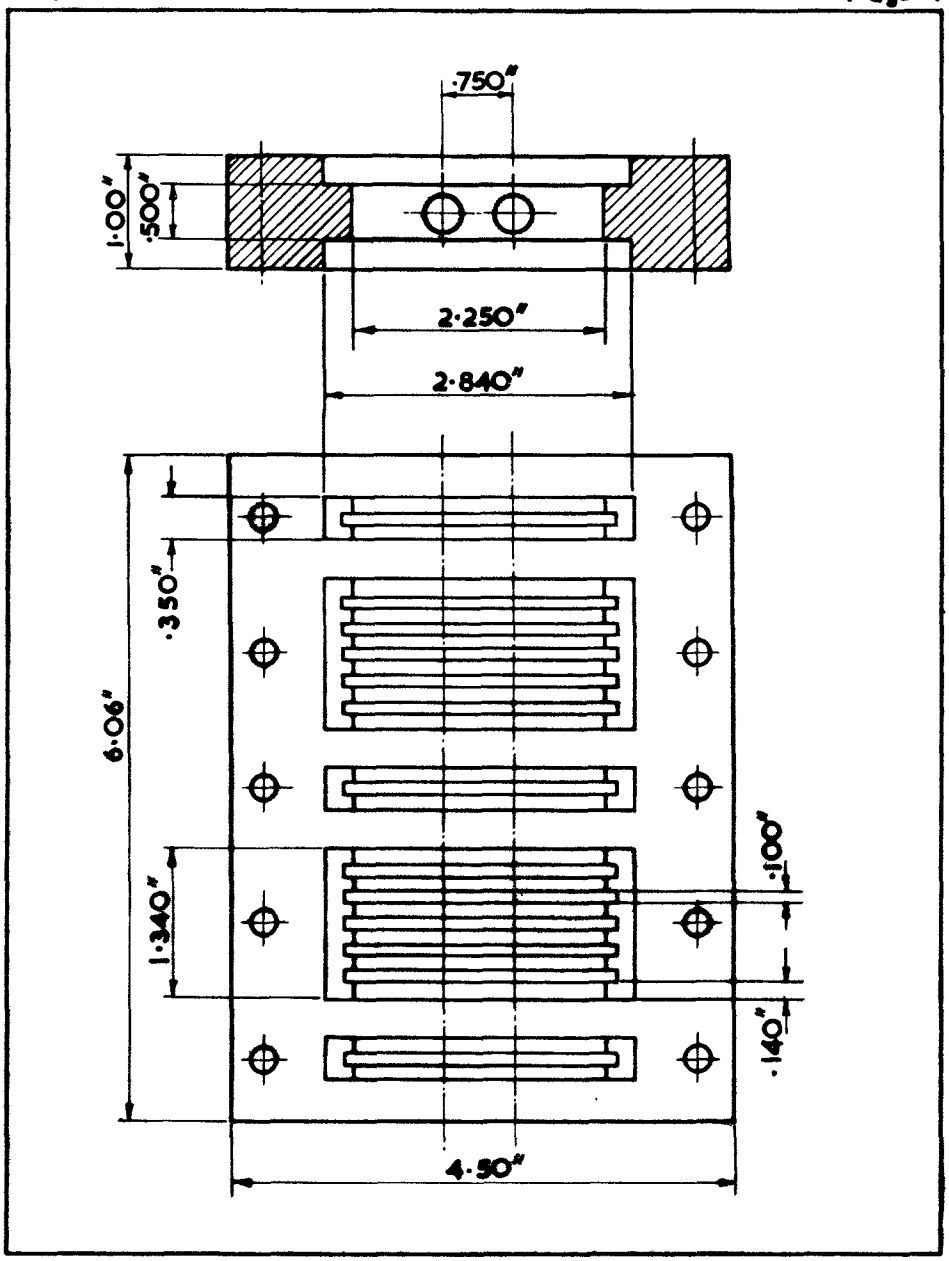

TYPICAL MOUNT FOR 3K Mc/s DUPLEXER (Page 1)

CV6028/1/4

MINISTRY OF AVIATION R.R.E.

CV 6034
CV 6035
CV 6036

Specification MOA/CV6034,5,6.
Issue 1 dated 23.3.60
To be read in conjunction with K1006

Security: Specification Unclassified | Valve Unclassified

Type of Valve X Band, fixed frequency, pulse magnetron, with integral magnet.

Prototype VX3276

Cathode Unipotential, indirectly heated.

Cooling Forced Air

Climatic See T A.Requirement Page 6

Weight 7½ lbs. nominal.

Packing Pan-climatic, see T.A. Requirement Page 7

Marking
As K1001/5 with CV Number as appropriate, and Serial No.

Dimensions and Connections
Page 11

Mounting Support
Face Plate (see page 11)

Mounting Position
Any

RATINGS
Not for inspection purposes.
All limiting values are absolute.

Parameter	Units	Symbol	Max.	Min.	Notes
Heater Voltage	Volts	EF	2.2	1.8	A
Heater Current (Surge)	Amps	If	30	-	A
Warm-up time for instant start	Seconds	tk	-	180	A
Pulse length	uS	tp	1.0	0.25	
Mean Input Power	Watts	Pi	360	-	F
Peak Input Power (1) tp = ¼ uS	kW	pi	360	150	D.E.
Peak Input Power (2) tp = 1 uS	kW	pi	200	150	D.E.
Minimum efficiency into a match	%			30	D
Frequencies:- CV6034	Mc/s	F	9590	9500	
CV6035	Mc/s	F	9645	9555	
CV6036	Mc/s	F	9700	9610	
Rate of rise of Anode Voltage	kV/uS	r.r.v.	250	100	B
Voltage reflection coefficient of load	Ratio	-	0.2	-	
Anode Temperature	Deg.Cent.	T	150°	-55°	C
Cathode stalk temperature	Deg.Cent.	T	165°	-55°	C
Altitude	Feet	-	10,000	-	

Notes

A. For mean input powers in excess of 50 watts the heater voltage shall be reduced in accordance with the formula:-

$$Ef = 2\left(1 - \frac{Pi}{300}\right) \pm 0.2 \text{ volts}$$

B. The rate of rise of the pulse voltage (r.r.v.) is defined as the value of $\frac{dv}{dt}$ measured at the onset of oscillation.

Z.20733.

C. The magnetron shall be forced air cooled so that the anode and cathode stalk do not exceed the maximum permitted temperatures. The directions of air blast and points of measurement of the temperatures are indicated on the outline drawing.

D. In the worst phase of a mismatch having a voltage reflection coefficient of 0.2 the minimum R.F. output power may be estimated by assuming an efficiency of 25%.

E. For intermediate pulse lengths pi (max) shall be determined by linear interpolation.

F. The magnetron pulse voltage (epy) will be between 16-18 kV for a pulse current (ib) of 20 amps.

G. INTERSERVICES CATALOGUE NUMBERS:

	CV NO.
5960 - 99 - 037 - 2180	CV 6034
5960 - 99 - 037 - 2181	CV 6035
5930 - 99 - 037 - 2182	CV 6036

TESTS See Note 10

To be performed in addition to those in K1006. Notes 19, 20.

Conditions for Oscillation Tests

Ref	Feature	Notes	Symbol	Value Osc.1	Value Osc.2	Units
	R.F.Load Reflection Coeff.			0.025 max	0.025 max	Ratio
	Waveguide Coupler	1 21		No. 16	No. 16	
4.16.3.2	Heater Start		Ef	1.8 max	1.8 max	Volts
	Run		Ef	0	0.7 ± 7%	Volts
	Warm up time		tk	180 max	180 max	Seconds
4.16.3.3.	Pulse Characteristics					
	Pulse Width	2	tp	.25 ± 10%	1.0 ± 10%	uSecs
	Duty Cycle		Du	.001 ± 10%	.001 ± 10%	Ratio
	Rate of rise of Pulse voltage	3	r.r.v	250 min	225 min	kV/uS
4.16.3.4	Mean Anode Current		Ib	20 ± 2%	12 ± 2%	mA d.c.

Group A. Acceptance tests at 100% Inspection level.

Ref.	Tests	Conditions	Symbol	Limits Min.	Limits Max.	Units
4.10.8	Heater Current	No Pulse voltages Ef = 2.0 V ± 2% tk = 180 (min)	If	9.5	11.5	Amps
4.9.13	Pressuring	45 psi abs	leakage		.005	lbs weight per hour.
4.16.7.3	Holding Period		t	168		Hours
4.16.7.1	Stability Notes 3,12,13,14	Osc.1 pi=360 kW(min) to be applied instantaneously immediately following the warm up period. Refl.Coeff.0.2 min.	M.P.		0.35	%
4.16.5	Pulling Figure	Osc.1 Refl.Coeff.0.2 min.	ΔF		15	Mc/s
	Pulse Voltage Note 16	Osc. 1	epy	16	18	kV
4.16.3.6	Power Output	Osc. 1	Po	100	170	Watts
	Frequency	Osc. 1 Any anode temperature between 40°C and 70°C	F F F	9525 9580 9635	9580 9635 9690	Mc/s Mc/s Mc/s
4.16.3.7	Spectrum(1)	Osc. 1 Ib=15-22.5 mA				
	(a) R.F.Bandwidth (b) Minor Lobes		BW	6	2.5/tp	Mc/s db
		To be observed over range Max. BW and min. ratio of minor lobes to be recorded.				
4.16.6	Pushing Factor Note 15	Osc.1 20 ± 1 Amps			0.4	Mc/s/A

Group B. Sample Acceptance Tests

Ref.	Tests	Conditions	Symbol	Limits Min.	Limits Max.	Units
		Combined AQL=10% Insp.Level IA No holding period required for these tests				
4.16.3.6	Power Output	Osc.2	Po	50	-	Watts
4.16.7.1	Stability Notes 3,12,13,14	Osc.2 pi=200 kW(min) Refl.Coeff.=0.2min.	MP		0.35	%
4.16.3.7	Spectrum (2) (a) R.F. Bandwidth (b) Minor Lobes	Osc.2 Ib=7-15 mA Refl.Coeff.=0.2min.	 BW	 - 5	 2.5/tp	 Mc/s db
	Spectrum (3) (a) R.F. Bandwidth (b) Minor Lobes	Osc.1 Ib=15-22½ mA Refl.Coeff.=0.2 min	 BW	 5	 2.5/tp	 Mc/s db
		Observed over all phases and ranges. Max. BW and min.ratio of minor lobes to be recorded				

Group C. Sample Acceptance Tests

		Combined AQL=10% Insp.Level II				
	Resonance Search Note 7					
	Microphony Note 7	Osc.2 (a) Total frequency deviation (b) Change in output power	 ΔF ΔPo		 1.0 25	 Mc/s %
	Fatigue Notes 7,22					
	Shock Note 8		Acc	50		g
	Drop Note 9	In carton (see also Q.A.requirement)		4'6"		Height
	Post fatigue, shock and drop test end points. (1) All 100% tests same limits except F and kV (2) Change in frequency (3) Change in pulse voltage		 ΔF Δepy		 10 0.75	 Mc/s kV

Acceptance Life Tests (1)

Ref.	Tests Conditions	AQL %	Insp. Level	Sym-bol	Limits Min.	Limits Max.	Units
	Survival Rate Life Tests Combined AQL = 12%						
4.11.5	Survival rate life test Osc. 1, Intermittant. Off period = 8 mins.min.	6.5%	1		20		Hours
	End points Osc. 1:-						
	(a) Change in mean power			ΔPo		10	%
	(b) Change in frequency			ΔF		10	Mc/s
	(c) R.F. Bandwidth			BW		3/tp	Mc/s
	(d) Stability (no holding period required)			M.P		0.5	
	Survival rate standby life test No pulse voltages Ef = 2.0 volts	6.5%	1		22		Hours
	End points Osc. 1:-						
	(a) Change in mean power			ΔPo		10	%
	(b) Change in frequency			ΔF		10	Mc/s
	(c) R.F. Bandwidth			BW		2.5/tp	Mc/s
	(d) Stability (no holding period required)			M.P		0.5	%

Acceptance Life Tests (2). See also Note 10

Ref.	Tests Conditions	Sym-bol	Limits Min.	Limits Max	Units
4.11.5 4.11.3.2	Intermittent Life Test Group D Note 22 Osc.1 off period 8 minutes (min.)		500		Hours
	Test end points Osc. 1.				
	(1) Power output	Po	90		Watts
	(2) Change in frequency	ΔF		(+10 (-25	Mc/s
	(3) R.F. Bandwidth	BW		3/tp	Mc/s
	(4) Stability (No holding period required)	MP		0.5	%
	(5) Change in pulse voltage	Δepy		0.75	kV
	Standby Life Test Notes 18,22 Group D No pulse voltages Ef = 2.0 volts		500		Hours
	Test end points Osc. 1				
	(1) Power output	Po	90		Watts
	(2) Change in frequency	ΔF		(+10 (-25	Mc/s Mc/s
	(3) R.F. Bandwidth	BW		3/tp	Mc/s
	(4) Stability (no holding period required)	M.P		0.5	%
	(5) Change in pulse voltage	Δepy		0.75	kV

Ref	Acceptance Life Tests (2) (Cont'd) Test	Conditions	Symbol	Limits Min.	Max	Units
4.11.3.2	Shelf Life Note 11	Group D Test end points as for Standby Life Test		28		Days
	Type Approval Life Tests Notes 10,22 All tests and end points as for Acceptance Life Tests (2) but with the following limits. Intermittent Life Test	Evidence on one valve (min.) required		1000		Hours
	Standby Life Test	Evidence on one valve (min) required		2000		Hours
	Shelf Life Note 11	Evidence on one valve (min.) required		90		Days
3.1	Type Approval Design Requirements. Note 10					
	Altitude Note 4	Osc. 1 and Osc. 2			500	mm
	Corona Note 4	Atmospheric pressure t_p = 1 us ± 10% (min) epy = 25 kV (min) Du = 0.001 (min)				
4.16.1	Cooling Note 5	Anode dissipation P_p = 180 watts (min)	ΔT		55	Cent.
	Input capacitance	No voltages measured at any frequency between .001 - 1.0 Mc/s	Cin	11	13	pf
4.9.15	Low temperature operation Notes 6,12, 13,14	Stability Osc. 1 T = -55°C initially Ef = 2.0 V max	M.P.		0.35	%
	Thermal Factor	Osc.1 T = 85° ± 15°C	$\Delta F / \Delta T$		-0.2	Mc/s /°C
	Stability Notes 12,13,14	No holding period required	M.P.		0.35	%
		Refl.Coeff.= 0.2 min. Every combination of Pi,r.r.v., within the trapezia defined in Note 17 for Osc.1 and Osc.2				
	Tropical Exposure Test end points as for Intermittent Life Test	As K1001, 10.1 first p.p. only		10		Days

Packing Requirement.

To reduce the shock reaching the magnetron to 50 g (max) when dropped from 4'6" on to a hard surface. It is required to do this in any ambient within the limits -40°C to + 65°C and relative humidity 0-100%.

NOTES

1. Details of waveguides are given in RCL351 (Waveguide) obtainable from Radio Components Standardisation Committee, 77-91, New Oxford Street, London W.C.1.

2. (a) Modulator Impedance: The output voltage of the test modulator on open circuit shall not be less than 1.3 times the operating voltage and the output current on short circuit shall be at least 1.5 times the operating current measured on isolated pulses.

(b) Modulator Charging Characteristics: The available energy for every pulse in the period immediately following an arc in the magnetron under test shall not be less than the available energy when the magnetron is operating normally.

3. (a) The rate of rise of the pulse voltage (r.r.v.) is defined as the value of $\frac{dv}{dt}$ at the onset of oscillation.

(b) A modulator will be accepted as having a suitable rate of rise of voltage if it is demonstrated to the satisfaction of the Inspecting Authority that the maximum rate of rise of voltage measured lies within the specified limits.

During the measurement of the rate of rise the modulator will be adjusted so that it would give the specified operating conditions if any otherwise acceptable magnetron were fitted. For the test the modulator shall be terminated by a capacitor of a value equal to the nominal input capacitance of the magnetron. The measurements shall be made over the interval between the point when the voltage first reaches 80% and the point when it first reaches 100% of the pulse voltage of the magnetron. The value shall not fall after its maximum in this interval to less than 95% of the maximum value.

(c) The Approving Authority may waive the requirement to demonstrate compliance with the required rate of rise characteristic, but in lieu will require from the Manufacturer suitable documentary evidence in support of compliance.

4. (a) There shall be no evidence of corona when operating under the required test conditions at a pressure of 500 mm (max.) of mercury.

(b) With the cathode cold, and at atmospheric pressure, the magnetron shall withstand the required test voltage with the required pulse characteristics from a source of approximately 1000 ohms impedance for five minutes without suffering damage due to external discharges. If necessary this test may be carried out with a magnetron with a dummy target.

5. The anode shall be blown with 15 cu.ft of air per minute so that the anode block runs at 150°C or less. The pressure drop shall not exceed 3 inches of water.

6. 4.9.15 of K1006 shall be read as -55°C. When the block reaches -55°C the heater, at the specified voltage, shall be applied for tk = 180 secs (max.). A stability test shall be carried out under the required test conditions.

7. The magnetron, mounted by attachment of the face plate to a rigid surface by four screws, shall be subjected to a resonance search test. For frequencies 10-150 c/s the maximum acceleration shall be 2 g, for frequencies 150-500 c/s the acceleration shall be $\frac{1}{2}$ g. The test shall be carried out under the required oscillation condition and with vibration applied in three mutually perpendicular directions, one of which shall be the axis of the cathode stem and one of which shall be the axis of the waveguide output. The frequency shall be swept at a rate not exceeding one octave per minute. Resonance shall be detected by acoustic methods, by the presence of microphony or by other means at the discretion of the Approving Authority. During the search the microphony shall not exceed the limits specified. The p.r.f. may be adjusted if necessary to enable microphony to be detected and measured. The magnetron shall be vibrated for 10 hours or 10^7 cycles, whichever is the less, at the frequency of each resonance found, the direction of vibration being that which gives greatest excitation of the resonance; when this cannot be established the magnetron shall be fatigued in each of the three directions for 10 hours or 10^7 cycles, whichever is the less, at the acceleration as for the resonance search test.

8. To be carried out on hammer machine as defined in K1001 Issue 5.

9. Drop on to a hard surface. The pack shall hit the surface with four different faces and two diagonally opposite corners making six drops in all.

10. For Type Approval the Manufacturer, at his expense, shall do the following:-

(a) Carry out, on each of four valves, the tests in Group A and Group B and then send the valves with detailed test reports to the Approving Authority. The Approving Authority at its discretion may carry out on these valves any test or requirement within this specification.

(b) Carry out the Type Approval life tests and send the information to the Approving Authority. This requirement may be waived at the discretion of the Approving Authority, and in lieu the Manufacturer will be required to submit evidence of lives to Type Approval limits. The Approving Authority at its discretion may require the Manufacturer, at the Manufacturer's expense, to carry out the Acceptance Life Test (2) to the Type Approval limits either once during the currency of the contract or once per year.

(c) Carry out the Group C Acceptance Tests. This requirement may be waived at the discretion of the Approving Authority and in lieu the Manufacturer will be required to submit evidence of compliance.

(d) Certify that the valves will meet the Type Approval Design Requirements No evidence of compliance will be needed.

The Approving Authority may at any time after Type Approval and at its own expense select a small number of valves in any order from submissions during any period. The selection may be delegated. The Inspecting Authority may at its own expense at any time after Type Approval, select a small number of valves in any order from submissions during any period. The Approving Authority, at its discretion, may carry out on these valves any test within the Type Approval Design Requirements.. Any failure will be deemed to constitute evidence of non-compliance. The Manufacturer may, at his expense, submit test results on further valves within the selected period and from such adjacent periods as the Approving Authority will allow. The decision of the

Approving Authority on compliance will be based on the combined results of all the valves tested.

11. With or without pack at the discretion of the Manufacturer.

12. Stability shall be measured in terms of the number of output pulses missing, expressed as a percentage of the number of input pulses applied during the period of observation. The missing pulses (M.P.) due to any cause are considered to be missing if the r.f energy is less than 70% of the normal energy level.

13. With the peak input set to the specified value the mismatch shall be introduced and the phase adjusted to give the maximum anode current. A missing pulse count shall be made over a period of three minutes. The phase of the reflection shall then be varied through 360° (i.e. equivalent to changing the length of guide between input flange and reference plane of reflection by half a guide wavelength) and then set to the position showing the maximum missing pulse rate. If the value of phase is less than 45° different from the previous setting and if the previous value of the missing pulse ratio was less than 0.1% this will be regarded as satisfactory performance. This part of the test shall be completed within 6 minutes of switching on the H.T. after the specified holding period. If the above two conditions are not satisfied then the bracketing procedure in Note 14 shall be used.

14. The following bracketing procedure shall be used. The phase of the mismatch shall be set to the apparent position showing maximum missing pulse ratio and then the phase altered to two values, one on each side of the previous setting and differing from it by not more than 15°. The missing pulse ratio shall be measured over an interval of not less than one minute in each position. If either of the values of missing pulse ratio found exceeds the value previously found, a further measurement shall be made following the same procedure but in a single position beyond that giving the greater reading. The process shall be repeated until a value of missing pulse ratio is found which is less by at least 0.1% than the highest figure found or is itself less than 0.1%. This test must terminate within 15 minutes of switching on the H.T. after a holding period.

15 The E.H.T. supply to the modulator shall be modulated so as to cause the magnetron pulse current to vary sufficiently about a mean value so as to exclude the effects of thermal expansion of the electrodes. The maximum pulse current modulation shall be $\pm 2\frac{1}{2}$ Amps (peak). The maximum frequency displacement F of the spectrum, as observed on a suitably adjusted spectrometer, shall be noted and the value of $\Delta F/\Delta ib$ in Mc/s per Amp, where ib = peak to peak modulation of pulse current, shall be obtained.

16. The requirements of 4.16.3.5. are waived.

17. Pi and r.r.v are plotted as ordinate and abscissa respectively on rectangular Cartesian coordinates. a,b,c and d are the corners of a trapezium where a,b, c and d for both Osc. 1 and Osc. 2 are as under:-

Point	Osc. 1		Osc. 2	
	Pi	r.r.v.	Pi	r.r.v.
a	360	130	200	100
b	360	250	200	225
c	100	130	70	100
d	100	200	70	150

18. The valve shall be operated with heater only T = 125 $\pm$ 25°C and shall be tested at intervals of 100 hours (min.). The valve may remain operating for 60 mins. (max.) before renewing the standby condition.

20. Copies of K1006 and Inspection Instructions for use with K1006 can be obtained from:- The Secretary, The Ministry of Aviation, 77/91, New Oxford Street, London W. C. 1.

20. Paragraph 60.1.1. of Correlation Tolerances of the Inspection Instruction shall be excluded.

21. A flange similar in essential dimensions to "Flange Choke (WG16) Z830051" shall be used. For further details application shall be made to "The Director, R.R.E., Malvern, Worcs." and the drawing number TR/B 610180 quoted.

22. On completion of these tests the valves shall be considered expended.

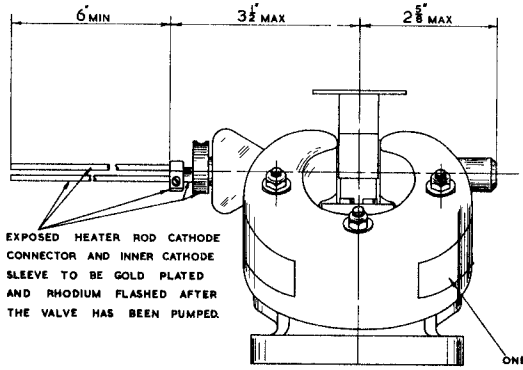

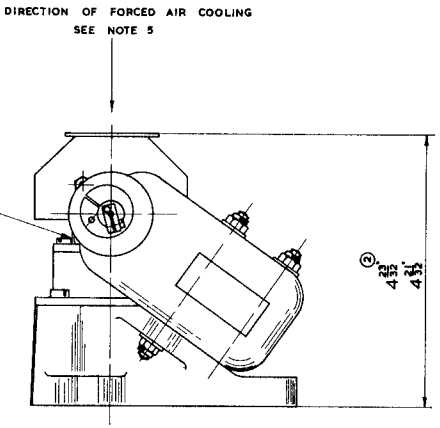

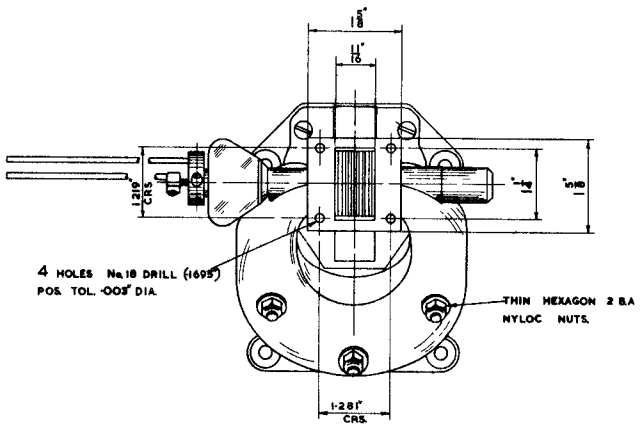

ALL EXPOSED SCREWS, NUTS AND WASHERS TO BE CADMIUM PLATED, PASSIVATED AND VARNISHED TO TS. 1910.

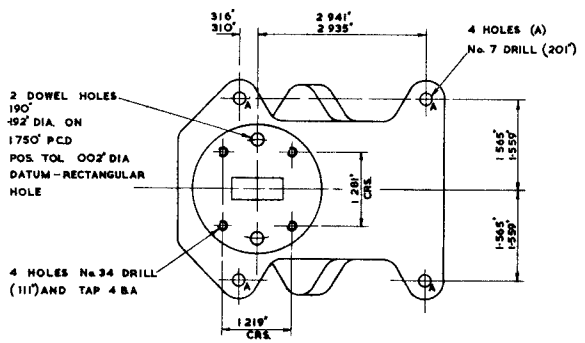

SCRAP VIEW LOOKING UNDERNEATH CASTING.

OUTPUT TRANSITION SILVER PLATED ·0005" THICK TO D.T.D 919
ALL LOCATING SURFACES OF THE TRANSITION AND THE BRACKET TO BE SEPARATED BY A FILM OF JOINTING COMPOUND J.C 5A TO D.T.D 900/4488.

CV6034-6036/1/1/1

CV6034-6036

VALVE ELECTRONIC

UNITED KINGDOM ATOMIC ENERGY AUTHORITY (A.E.R.E.)

CV6044

Specification D. At. En. CV.6044 Issue 1 dated 18th Feb. 1960 To be read in conjunction with K.1001	SECURITY Specification Unclassified Valve Unclassified

TYPE OF VALVE: Decade Scaling Tube
CATHODES: Cold
ENVELOPES: Glass Unmetallised
PROTOTYPE: VX.9194

MARKING
See K1001/4

BASE
International Octal

RATING	Rectangular Pulse Drive	Sine Wave Drive	Notes
Max. Striking Voltage (V)	350	350	
Nominal Maintaining voltage at .45 mA (V)	190	190	
Max. Anode Current (uA)	550	550	
Min. Anode Current (uA)	250	250	
Max. Speed (Digits/sec)	4,000	2,000	
Max. Input Signal Peak to Peak (V)	140	171	
Max. Guide Bias (V)	60		1, 3
Max. K_o Bias (V)	-20		1
Max. K_o Load (K)	100		
Max. Guide Bias Resistance (K)	220		
RECOMMENDED OPERATION			
Supply Voltage (V)	400	400	1
Anode Resistor (K)	470	470	
Signal Amplitude (V)	120	55	2
Both Guides			
Pulse Duration (uS)	80		
Both Guides			
Signal Delay, 2nd Guide (uS)	80		
Signal Delay, 2nd Guide (degrees)		45	
Bias Voltage (V)	35	9	1, 3
Both Guides			
Bias Voltage K_o (V)	-10	-10	1
Output Cathode Load (K)	33	33	

CONNECTIONS

Pin	Electrode
1	K_{1-9}
3	1st Guides
4	Anode
5	2nd Guides
7	K_o

DIMENSIONS
See Fig. 1 page 4

NOTES

1. Relative to K_{1-9} Electrodes.
2. Signal for sine wave drive specified in V.R.M.S.
3. With rectangular pulse drive at high speeds this guide bias must be maintained, e.g. by D.C. restoration. The test circuit of fig. 2., page 4, is applicable.

Z.22289. NATO STOCK NUMBER IS 5960-99-037-4264, (AL)

TESTS

To be performed in addition to those applicable in K1001

CV6044

	Test	Test Conditions	AQL %	Insp. Level	Symbol	Limits		Units	Notes
						Min.	Max.		
	GROUP A								
	Acceptance Tests								
a	Insulation	To be measured between any one electrode and parallel combination of all the others at 170V.		100%		100		M	1
b	Striking Voltage	A - K_o V_b = 350V		100%	V_s				1, 3
c	Scaling Accuracy	V_b = 400V V_1 = +35V V_2 = -40V T = 60uS Frequency = 4.0 Kc/s.		100%					1, 2
d	Running Voltage	V_b = 400V		100%	V_r	184	194	V	1, 4
	GROUP B								
	Life Test	Combined AQL	1.5	IA					
a	Survival running life test	V_b = 500V V_1 = +35V V_2 = -40V T = 60uS							5, 7
	Tests to be performed at end of survival running test.								
b	Scaling Accuracy	V_b = 400V V_1 = +35V V_2 = -40V T = 60uS Frequency = 4.0 Kc/s.							2
c	Running Voltage	V_b = 400V			V_r	176	206	V	4

TESTS (Cont'd)

CV6044

	Test	Test Conditions	AQL %	Insp. Level	Symbol	Limits Min.	Limits Max.	Units	Notes
	GROUP C								
	Electrical Retest								6
	Not more than 7 days prior to application for Services final approval								
a	Scaling Accuracy	V_b = 400V V_1 = +35V V_2 = -40V T = 60uS Frequency = 4.0 Kc/s		100%					2
b	Running Voltage	V_b = 400V		100%	V_r	184	194		4

NOTES

1. Tests of Group A are to be applied directly after completion of manufacture.

2. The tube shall scale without error the first applications of test signals (illustrated in fig.4 on page 4). Test signals are to be applied for at least 1/10th second. The test circuit of fig.3 page 4 is applicable.

3. K_{1-9} 1st guide and 2nd guide electrodes to be disconnected. Ambient illumination of valve to be 5 - 50 lumen per square foot. Valve to conduct in less than 10 seconds.

4. The K_{1-9} 1st guide and 2nd guide electrodes will be successively earthed through a suitable make before break type switch to cause 30 gaps to conduct in turn. The running voltage across each gap shall be within the specified limits. For this test the K_o and K_{1-9} electrode will be commoned. The test circuit to fig.2 page 4 is applicable. The measurement of the running volts is to be made between 0.1 and 2.0 seconds after the contacts of the make before break type switch have broken.

5. The valves selected for this test are to be run in the circuit shown in fig.5 page 4. One application of the pulses shown in fig.4 page 4 is to be made every 85 ± 5 hours. The tube is to receive 20 such pulses and then be removed. A valve which fails to step on the application of the test pulses shall be rejected. The normal guide bias is to be +60V which will be reduced to +35V immediately prior to the application of pulses.

6. During the period between the completion of Group A tests and the commencement of Group C tests no further processing shall be applied.

7. A lot shall consist of not more than one calendar month's production or 1301 whichever is the greater. For lots of 800 and less sampling codes should be as for lots of 801 - 1300.

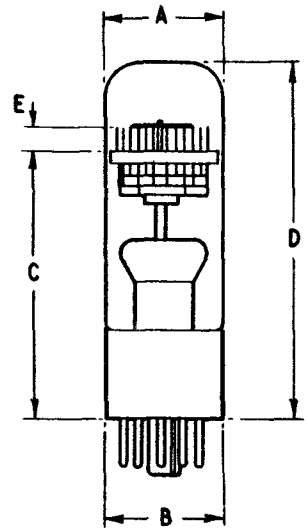

Fig. 1

DIMENSION	A	B	C	D
MIN. (mms)	27·5	28	64	82·5
MAX. (mms)	29·5	29·9	69	87·5

MAXIMUM ECCENTRICITY RADIUS 15·75 mms.

DIMENSION E WHICH WILL NORMALLY BE 6·0 ±0·5 mm., IS DETERMINED BY THE ASSEMBLY JIGS. FACILITIES MUST BE AVAILABLE FOR THESE JIGS TO BE CHECKED BY THE INSPECTING AUTHORITY AT WEEKLY INTERVALS.

ANGULAR DISPLACEMENT BETWEEN THE K_0 ELECTRODE AND BASE PIN No.6 SHOULD BE 0° ±12°. THIS DISPLACEMENT SHOULD BE MEASURED ABOUT AN AXIS PASSING THROUGH THE CENTRE OF THE BASE AND THE CENTRE OF THE ANODE SECTION OF THE ENVELOPE

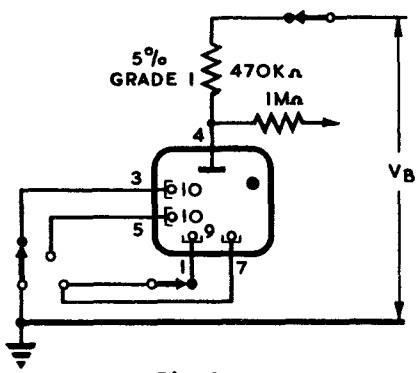

Fig. 2

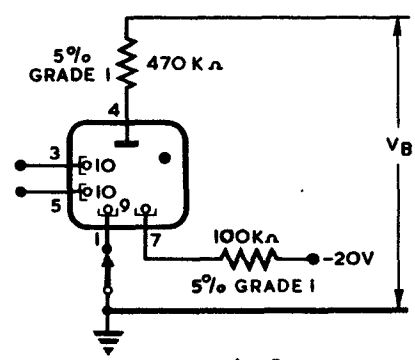

Fig. 3

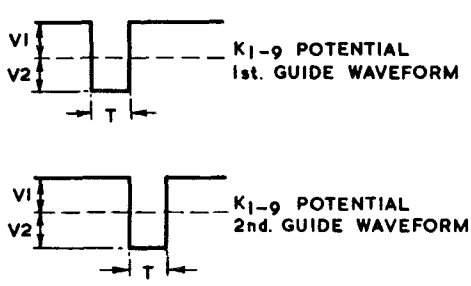

Fig. 4

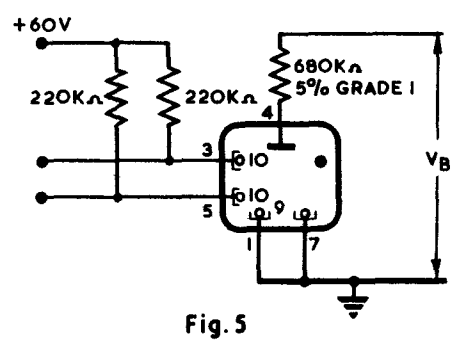

Fig. 5

VALVE ELECTRONIC

ADMIRALTY SURFACE WEAPONS ESTABLISHMENT

CV6045

Specification AD/CV6045

Issue No. 1 Reprint "A" dated 24.6.60.

To be read in conjunction with K1001, B.S.448 and B.S.1409.

SECURITY

Specification	Valve
Unclassified	Unclassified

⟶ Indicates a change

TYPE OF VALVE:- Beam tetrode

CATHODE:- Indirectly heated

ENVELOPE:- Glass, unmetallised

PROTOTYPE:- VX6094/CV2377, see Note C.

MARKING

See K1001/4

BASE

B.S.448/B7A

CONNECTIONS

Pin	Electrode
1	h
2	h tap
3	g1
4	k
5	g2
6	a
7	h

RATINGS

			Note
Heater Voltage (series)	(V)	26.0	
Heater Current (series)	(A)	1.3	
Heater Voltage (parallel)	(V)	13.0	
Heater Current (parallel)	(A)	2.6	
Max. d.c. Anode Voltage	(V)	800	A
Max. d.c. Screen Voltage	(V)	300	A
Max. Anode Dissipation	(W)	90	A
Max. Screen Dissipation	(W)	10	A
Max. Cathode Current	(mA)	800	A
Max. Heater/Cathode Voltage (d.c.) (Heater Negative)	(V)	250	A
Mutual Conductance	(mA/V)	31	B

DIMENSIONS

See K1001/A1/D1

Dimension	Min.	Max.
A (mm)	129	137
B (mm)	63	65

CAPACITANCES (pF)

$C_{a, g1}$	1.2
C_{in}	56
C_{out}	21

MOUNTING POSITION

Vertical

NOTES

A. Absolute maximum value.

B. Measured at Va = Vg2 = 150, Ia = 450 mA.

C. This valve is electrically similar to CV2377 but is shorter and has a sintered glass base.

D. The Joint Services Catalogue Number is:- 5960-99-037-2221

CV6045

TESTS

To be performed in addition to those applicable in K1001

	Test Conditions					Test	Limits		No. Tested	Note
	Vh (V)	Va (V)	Vg2 (V)	Vg1 (V)	Ia (mA)		Min.	Max.		
a	26.0	0	0	0	0	Ih (A)	1.17	1.43	100% or S	
b	26.0	150	150	Adjust	600	Vg1 (V)	-6.7	-45.0	100%	
c	26.0	150	150	"	600	Reverse Ig1 (/uA)	-	6.0	100%	
d	26.0	150	150	"	600	Ig2 (mA)	-	65.0	100% or S	
e	26.0 Vg1 then made more positive by 3V	150	150	"	450	Ia Rise when Vg1 is made more positive by 3V (mA)	71.0	136.0	100%	
f	26.0	150	150	-60	-	Reverse Ig1 (/uA)	-	12.0	100%	
→ g	26.0	800	300	Adjust	115	V_a (mins)	2	-	100% or S	2
h	26.0	150	150	-60	-	Ia (mA)	-	15.0	100% or S	
j	26.0	50	150	As in Test (b)	-	Ig2 (mA)	-	140.0	100% or S	1
k	26.0	100	100	0	-	Ia (mA)	450	750	100% or S	
l	26.0	0	0	0	0	Ih-k (/uA)	-	600	100%	

With heater negative to cathode, 250V shall be applied between heater and cathode, through a meter-protecting resistance of not more than 0.1 megohm.

NOTES

1. Test voltage applied only for sufficient time to obtain a steady reading.
2. → These conditions shall be held for a minimum period of 2 minutes during which time no sparking shall occur.

VALVE ELECTRONIC CV6051

Specification MOA/CV6051 Issue 1, dated 1-7-60 To be read in conjunction with K1006 and the relevent sections of K1001, K1005, where specifically indicated. See note A.	Security Specification: UNCLASSIFIED Valve: UNCLASSIFIED

AL1

TYPE OF VALVE Pulse Thyratron, Low Jitter, short recovery time, tetrode, ~~with~~ without replenisher.

CATHODE Coated Unipotential.

ENVELOPE Glass.

PROTOTYPE VX2511, CX1120.

MARKING

K1001/4

BASE

~~K1001-B1M~~
~~(Super-Jumbo)~~
K1006. A4-18. A-Q.

RATINGS (NOTE B)

Not to be used for Inspection purposes

	Symbol	Units	Min	Max	Notes
Heater Voltage	Ef	Vac	5.85	6.75	
Heater Current at EF=6.3 Voc	If	Aac	9.6	11.6	
Cathode warm up time	tk	sec	120		D
Ambient Temperature	TA	°C	-55	90	E
Altitude		ft		10,000	
Grid 1,Peak Forward Voltage	egy1	Volts	300	750	F
Grid 2,Peak Forward Voltage	egy2	Volts	200	750	G
d egy1/dt		v/mus	1		H
d egy2/dt		v/mus	1		H
Grid 1,Peak Inverse Voltage	egx1	V		200	
Grid 2,Peak Inverse Voltage	egx2	V		200	
AL4 Grid 1, [redacted] Potential	eg1	V	-10	+5	J
Grid 2, [redacted] Potential	eg2	V	-120	-50	J,K
AL3 Grid 1,Drive current	igy1	A	0.1	0.5	
tgd		mus	0.5	3	L
DC anode supply voltage	Ebb	kVdc	2		
Anode Peak Forward Voltage	epy	kv		16	M
Anode Peak Inverse Voltage	epx	kv		5	N
Mean Anode current	Ib	Adc		0.2	P
AL2 Peak Anode Current	Ib	A		325	
dib/dt		A/us		2,500	Q
Product epy(v)xprr x ib(A)				3.2 x 10⁹	
Recovery Time	tR	mus			C

CONNECTIONS

Pin	Electrode
1	Grid 1
2	Cathode Heater
3	Heater
4	Grid 2
TC	Anode

DIMENSIONS (INCHES)

Dimensions	Min	Max
Length(Overall)	7¾	8¼
Diameter	2	2.9/16

MOUNTING POSITION

Any (Note R)

JOINT SERVICE CATALOGUE NO:

5960 - 99 - 037 - 2231

RATING NOTES

A. Copies of "Inspection Instructions for Electron Tubes", I.I.E.T., referred to in K1006 and in this specification, may be obtained from:-

The Secretary, T.L.5(b),
Ministry of Aviation, Castlewood House, 77/91, New Oxford Street,London.W.C.1.

B - PARAGRAPH 3.2 OF K1006 APPLIES ANY LIMITING RATINGS ARE
B. ~~Paragraphs 3.2 and 6.5 of K1006 apply.~~ OBSOLETE & NON-SIMULTANEOUS.

C. See figure 3, and section 1 of the Data Sheet.

D. For instantaneous starting applications where the anode voltage exceeds 12.0 kV, a pre-heating time of 5 minutes must be allowed.

E. TA shall be measured at a point three inches from the tube in the plane through the top of the base cap. If the tube is inclined to the vertical, TA shall be measured at the lowest point consistent with the above. The surroundings of the tube must be such as to permit free convection of air over the bulb. Cooling of the anode lead is permissible, but there shall be no direct air blast on the bulb.

F. The pulse length shall be 1 usec (minimum) at the 300 volt level and shall overlap by 0.25 usec minimum the 200 volt level of the g2 pulse. The impedance of the trigger circuit shall be in the range 300 - 1000 ohms for the duration of the pulse. The D.C. resistance measured between grid and cathode, with no voltage applied, shall not exceed 2 kilohms.

G. The pulse length shall be 0.5 usec (minimum) at the 200 volt level. The impedance of the trigger circuit measured in accordance with note C. shall be within the range 100 - 1000 ohms. The DC resistance calculated from the reduction in the DC voltage, from the bias supply to the grid, measured at the grid, with the valve removed, when a direct current of 5 mA is being drawn, shall not exceed 2 kilohms.

See the Data Section for short recovery and high p.r.f. operation.

H. The instantaneous rates of rise of voltage should not be less than the given values, between the 50V and 300V levels (g1) and between 0 and 200 volts (g2) relative to the cathode. For values less than those specified the performance in respect of tj and Δtad may deteriorate.

J. The limits apply to the potential of the grid during the period between the completion of recovery and the commencement of the succeeding grid pulse.

K. Recovery time will be increased for bias voltages which are more positive.

L. tgd is defined as the time delay of the g2 pulse after the g1 pulse, measured at the 300 and 200 volt levels of the leading edges of the g1 and g2 pulses respectively. The measurement shall be made with respect to cathode at the tube socket with the thyratron removed.

M. To obtain Δtad less than 50 musec, and tad less than 0.25 usec, and tj less than 5 musec, epy should be greater than 6 kV. The maximum permissible epy for instantaneous starting is 13.5 kV and shall not be attained in less than 40 msec.

N. The peak inverse voltage, exclusive of a spike of 1 usec maximum duration and of 16 kV maximum amplitude, shall not exceed 10 kV for the first 5 usec after the anode pulse, and shall not exceed 5 kV thereafter.

P. ib is measured in the anode lead of the thyratron.

Q. dib/dt is defined as the maximum instantaneous value of the rate of rise of ib. The circuit must be such that no tube can have an instantaneous rate of rise exceeding the limit given. The measurement shall be made in the anode lead of the thyratron.

R. The valve should be mounted by the base only. Any cooling of the bulb due to a clamp may have a deleterious effect on operation, due to consequent absorption of hydrogen.

DATA SECTION

The object of this data section is to present additional information to assist the equipment designer in obtaining the best performance from the valve.

1. RECOVERY

1.1 After a thyratron has passed a pulse of current, a certain time must elapse before the valve will again withstand positive anode voltage. This time, which is a function of the grid bias, grid impedance and peak anode current is known as the recovery time. Thus the time allowed for recovery, in which the anode must be negative, must be greater than the recovery time of the valve. The former is governed largely by the degree of mismatch, charging circuit and the inverse diode system, but other factors such as the magnetising current of the pulse transformer will effect it.

1.2 For a full description of the process of recovery see Refs. 1, 2. Briefly, for the grid to regain control it must reach some critical negative potential (which is a function of time) in the face of an exponentially decaying positive ion current. Thus the bias source must be capable of supplying relatively high peak currents, although as this is in bursts, a large reservoir capacitor will generally provide a low source impedance. To assist circuit design the variation of recovery time with grid resistance is plotted, with grid bias as a parameter. These curves are for a reapplied anode voltage of 1kv, since it has been found that the recovery time for full applied voltage does not differ by more than one or two micro-seconds from that at 100v.

1.3 In general the impedance between the bias supply and the valve grid (known as the recovery impedance) will not be purely resistive and may contain stored energy from the grid pulse. The result of this will be to assist the recovery, but the exact effect would have to be evaluated for each particular case. In many cases trouble may be avoided by taking the recovery resistance as the total resistance between grid and bias source ignoring the effect of shunt inductance and using the recovery time corresponding to this from the graph. This will give a conservative result.

1.4 The formula $ZRg2 = \frac{eg2 - Ecc}{ig2}$ for the recovery impedance at any time expresses the above relationship, where

eg2 is the instantaneous grid 2 potential
ig2 is the instantaneous grid 2 current
Ecc is the on load bias voltage.

In general ZRg2 will not be a constant but the recovery time corresponding to a given resistance will be obtained if ZRg2 is less than or equal to the given Rg2 throughout the period from the end of the grid potential plateau (Ref.2) until the grid reaches its final potential.

The above equation assumes that some point exists which remains at a constant potential of Ecc to provide a measuring point. In a case when this is not so, e.g. when bias is provided by a potential divider from some larger negative rail and the tapping point is not by-passed by a sufficiently large capacity, Ecc is the initial potential of the tapping point and Zg is composed of the grid circuit impedances, plus the effective source resistance of the potential divider. Obviously this is not an economical method quite apart from the effect of feeding back pulses into the negative rail, and it is strongly recommended that a large capacitor such that:-

$$C \cdot ZRg2 \gg tR \times 100$$

be used to stabilise the bias throughout the recovery time. Clearly this may not be fully re-charged before it is next discharged thus Ecc will not be equal to the open circuit source voltage. The necessary source voltage Es may be calculated as follows:-

Mean current drain (if C large)

$$\frac{Ecc}{ZRg2} \cdot tR \times prr$$

$$\text{thus } Es = Ecc \left(1 + \frac{Rs}{ZRg2} \cdot tR \times prr\right)$$

where Rs is the source resistance. This slightly over-estimates the correction by assuming that the grid cathode is a short circuit for the duration of the recovery time. In many cases the correction will be small.

1.5 For economy in bias power, the system has been used of applying between 10 and 20v bias to the thyratron grid via an inductance of a few milli-henries. This is in parallel with the grid trigger, and thus the time constant must be large enough not to seriously differentiate the grid pulse. During the main current pulse the thyratron grid is held at a positive potential, and thus the current in the inductance rises. At the end of the conduction period the grid rests at about cathode potential and the current continues to rise until it is limited by the available positive ion current. Then the voltage across the inductor falls rapidly driving the thyratron grid to about -100v, after which it slowly rises to the applied bias voltage. However, although the circuit may seem attractive, care is needed in design. The locus of grid potential may not cross the locus of the critical grid bias, but move parallel to it, or even worse, cross and re-cross it so that the valve recovers and then relapses. This condition may result in non-repeating charging cycles and consequently (although of use in difficult cases), this system depending as it does on un-controlled valve parameters, is not recommended for general use.

1.6 Attention should be directed to the effect of the charging circuit on recovery. With linear charging reactors the time available for recovery will be a maximum when the inductance is such as to give exactly resonant charging, with any particular value of inverse voltage. Thus for general use resonant charging is preferred. However, if a lower value of inductance is used, with no charging diode, the anode voltage will go increasingly negative for a time before starting to rise positive thereby increasing the time available for recovery without needing a large degree of mismatch. Further if the increases in choke volt-amps and the finite rate of change of pulse forming network voltage at the time of discharge are permissable this system is convenient and simple. (In practice with an inverse diode the negative excursion would tend to be clamped to earth, but the effect is similar).

Recent work done by R.R.E. shows that there are advantages to be gained from the use of non-linear charging reactors, which initially have a very high inductance, then saturate half way through the charging cycle and finally desaturate again to give an almost rectangular rise of P.F.N. voltage. This seems a convenient system for high pulse repetition rates provided that the grid circuit impedance is not so high that the rapid rise of anode voltage triggers the thyratron grid capacitively.

1.7 It has been found that g1 plays little part in recovery, provided the g1 pulse is not excessively long so as to retard recovery and has a reasonably low impedance to cathode to avoid capacitance triggering.

2. TRIGGERING

2.1 The trigger circuit must provide a voltage pulse of sufficient amplitude to create rapid ionisation in the grid cathode region and have sufficient current capacity to maintain this ionisation at an adequate level to give rapid breakdown between the anode and cathode. The rate of rise of voltage should be as high as possible and series inductance should be minimised to prevent limiting the rate of rise of grid current. By these means precise and rapid triggering will be obtained, minimising jitter and drift of anode breakdown time.

2.2 In order to check the capabilities of a grid trigger generator, the amplitude, width, and rise-time are checked at the grid terminals with the valve removed, the limits and points of measurement for width and rate of rise of voltage being as specified in the valve ratings.

In order to assess the ability of the trigger generator to supply peak current it is assumed that the thyratron behaves as an ideal diode between grid and cathode. For measurement purposes a silicon diode type RS27A (CV7024) is used to short circuit the grid and cathode terminal with the valve removed and the resulting current measured. It will be clear that when bias is used the current will be that produced by the portion of the pulse above cathode potential only.

2.3 At the instant of anode breakdown a large positive spike of some thousands of volts and of the order of 10 milli-microseconds wide is fed back from the thyratron into the trigger circuit. This is partly due to the rise of current in the cathode lead inductance and can be reduced by earthing the trigger return directly at the thyratron cathode. The remaining spike is often suppressed by passage through a short length of coaxial cable and integration by stray capacities and series resistance. In cases, however, where damage may result from the voltage spike a silicon carbide non-linear resistor may be connected between cathode and the trigger unit end of the grid resistor. The spike is then substantially removed.

Time jitter is mainly due to the magnetic field of the heater, other than that due to jitter on the trigger pulse or bias supplies. It can be reduced to negligible proportions by attention to triggering, but further improvements will be made by using D.C. for the heater supply.

Drift is a consequence of the warming up of the thyratron. It may be minimised by an adequate cathode warm up time before HT is applied and by an adequate trigger pulse, which will increase the precision of firing and, by reducing anode dissipation, reduce the tendancy to drift. A low D.C. resistance of the bias supply will also help in minimising drift.

2.4 The full advantage of tetrode characteristics will not be obtained unless a suitable priming plasma has been created by the g1 drive pulse prior to the application of the g2 pulse. Therefore, the ratings on g1 drive current and tgd (the time interval between the leading edge of the g1 pulse and the leading edge of the g2 pulse) should be strictly observed.

When particularly precise triggering is necessary and anode delay time is important, variation of g1 current (ig 1) due to amplitude jitter of the drive pulse must be minimised. The values of dtad/digl given in the table below may be used to calculate the expected delay but it should be realised that the value specified is measured with grid pulse of the lowest amplitude and rate of rise permitted by the ratings. Better triggering, in accordance with paragraph 2 will reduce the figure. Similar considerations apply to HT ripple and the value of dtad/depy. The table also gives the maximum change in anode delay time with changes of heater voltage or ambient temperature:

Test	Test Conditions	Limits	Units
tad (Ef)	Ef range 5.8 - 6.8 Vac	30	mus
dtad/digl	ig range 0.3 - 1.0 A	100	mus/A
dtad/depy	epy range 5Kv - 16Kv	5	mus/Kv
tad(TA)	TA range -55°C to + 90°C	30	mus

Parallel operation of tetrode thyratrons is relatively easy due to their precise triggering properties. The preferred method is to use a common g1 pulse fed to each valve via a suitable resistor to prevent interaction and a separate g2 pulse to each valve, slightly variable in time so that all valves may be made to fire simultaneously. Various automatic devices have been used to ensure this, but provided the delay circuits are stable good results can be obtained by manual control.

3. ANODE CIRCUIT

3.1 In order to prevent excessive anode dissipation and consequent rapid clean up of gas, limits are placed on the peak and mean rates of rise of anode current. It is normal practice to include an inductor at the anode to limit the rate of rise. However, although this does prevent the rapid discharge of stray capacities through the valve the current due to these strays will still produce a reaction on the load current due to the anode inductor being common to both circuits. It is desirable additionally to connect all sources of stray capacity, charging circuit, inverse circuit etc., to one end of the PFN coil and to connect the thyratron anode to the other. This has the effect of delaying the discharge of stray capacities until the middle of the pulse, so preserving a good pulse rise at the load. This also improves the efficiency of the overswing circuit Ref.(3).

4. LIFE

4.1 The best life will be obtained if the valve is operated well within its ratings particularly with respect to rate of rise of anode current and grid pulse voltage.

References

1. Malter & Johnson — R.C.A.Review June 1950

2. Armstrong — R.R.E. Technical Memo 604

3. Watrous & McArtney — Fifth Symposium on Hydrogen Thyratrons and Modulators. 1958.

TESTS Notes 12.32

To be carried out in addition to those applicable in K1006. All limits are absolute.

Conditions for operating tests (except where otherwise stated for individual tests). (Note 1). The test conditions shall be at the discretion of the manufacturer provided they satisfy the limit below.

FEATURE	Symbol	Op1 Limits		Op2 Limits		Op3 Limits		Units	Notes
		Min	Max	Min	Max	Min	Max		
Heater Supply	Ef	-	-	-	-	-	-	Vac	2
	tk	-	180	-	120	-	180	Sec	-
Grid 1 Circuit	egy1	-	300		300	-	-	V	3
	$\frac{degy1}{dt}$	-	1.0	-	1.0	-	1.0	kV/us	4
	Zg1	1.0	-	1.0	-	1.0	-	kohms	5.3
	tp	-	1.5	-	1.5	-	-	us	6
	Eecl. Eg1	-5	0	-5	0	-5	0	V	7
Grid 2 Circuit	egy2	-	200	-	200	-	-	V	3
	$\frac{degy2}{dt}$	-	1.0	-	1.0	-	-	kv/us	4
	Zg2	1.0	-	1.0	-	1.0	-	kohms	5.3
	tp	-	1.0	-	1.0	-	-	us	8
	Ecc2 Eg2	-110	-90	-110	-90	-	-	V	7
	tgd	0.5	0.9	0.5	0.9	-	-	us	9
Anode Circuit	epy	16	-	5	6	5	-	kv	
	ib	170	-	100	-	170	200	A	
	$\frac{dib}{dt}$	2500	-	2500	-	-	2500	Aus	10
	tp	0.9	1.1	0.27	0.33	0.25	2.5	us	
	Prr	1000	-	6400	-	-	100	pps	
Mounting Position		Any		Any		Any			
Ambient Temp	Ta	10	40	10	40	10	40	°C	17

K1006	TEST	TEST CONDITIONS	SYMBOL	LIMITS Min.	LIMITS Max.	UNITS	NOTES
	GROUPA	100% Inspection					
	a. Instantaneous Start (1)	Op1, epy = 13.5 kv tk = 300 secs, max					18 13
	b. Operation(1)	Op1 for 10 minutes					14
	c. Anode Delay Time(1)	Op1	tad	-0.1	0.2	us	19,20
	d. Anode Delay Time Drift	Op1	Δtad		50	mus	21
	e. Jitter	Op1	tj		5	mus	24
	f. Short Circuit	Op1					22
	g. Grid 2 Current	Op1	Ic2		3	mA	15
	h. Grid 2 Hold Off	Op1					16
4.10.17.2	j. DC Anode Voltage	Op1	Ebb		1.0	kv	11
4.10.8	k. Heater Current	Ef = 6.3 Vac tk = 300 secs(min)	If	9.6	11.6	Aac	
	GROUP B	NO TESTS					
	GROUP C						12
	l. Recovery(1)	Op3, Ecc2 = -100V	tR		23	us	25
	GROUP D						12
	m. Recovery(2)	Op3					26
	n. Operation (2)	Op2 for 10 minutes					14
	p. Anode Delay Time (2)	Op2	tad	-0.1	0.2	us	19,20
	q. Anode Delay Time Drift(2)	Op2	Δtad		50	mus	21
	r. Jitter (2)	Op2	tj		5	mus	24
4.10.17.2	s. DC Anode Voltage	Op2	Ebb		2.0	kv	11
	t. Instantaneous Start (2)	Op1, epy = 12 kv tk = 120 secs					13,18

CV6051

K1006	TEST	TEST CONDITIONS	SYMBOL	LIMITS		UNITS	NOTES
				Min.	Max.		
	GROUP E						12
	u. Resonance Search	Op2 50-200 cps at 2g 200-500 cps at 0.5g					28
	v. Microphony	Op2, 50-200 cps at 2g 200-500 cps at 0.5g	tj		1	mus	28
	w. Fatique	Ef = 6.3 Vac, No other voltages					29
4.9.19.3	x. Bump	Angle 20°					
4.9.20.5	y. Shock	Angle 13°					
K.1005	z. Container Drop	Valve to have holding period of 24 HRs min after drop and before electrical test end point tests.					
	aa. Test End Points for tests:- w.x.y.z.	Repeat tests a,b,e,h, same limits. Repeat tests c,d,g, with limits as under:-					
		c	tad	-0.1	0.25	us	
		d	Δtad		75	mus	
		g			5	mA	
		Combined AQL = 6.5% for the repeated tests, separately applicable to each test,w,x,y,z.					

Ref.	TEST	TEST CONDITIONS	Insp. Level	LIMITS		UNITS	NOTES
				Min.	Max.		
	GROUP F						12
4.11.5	bb. Life	Op1 Intermittant tk = 300 secs max.	Group D	500		hrs	30.23
	cc. Life Information	As for test bb.		1000		hrs	23.30
	dd. Stand by Life	Ef = 6.3 Vac. No other voltages	Group D	500		hrs	23.31
	ee. Stand by Life Information(1)	As for test dd		1000		hrs	23.31
	ff. Standby Life Information(2)	As for test dd		2000		hrs	23.31
	gg. Shelf Life	No voltages	Group D	2000		hrs	
4.11.4	hh. Test end Points for Tests bb,cc,dd,ee,ff, gg.	As for test aa					
	GROUP G						
	jj. Electrical Re-test after 28 days holding period.	Repeat tests a,b, c,d, same limits.					12

NOTES

1. These operating conditions define the test circuits which have the general form as in fig (1). Where one of these operation conditions is specified with one or more of the parameters changed, the limits applying to all independent parameters shall be unchanged, but proportional changes shall be made to the limits applying to those parameters subject to consequential variation. Measurement of all grid parameters shall be made at the socket with the valve removed.

2. The heater voltage shall be 6.3 volts for all tests.

3. Measured in accordance with paragraph 5.13.2 of I.I.E.T. appended to K1006. THE (AL1) VOLTAGES ARE MEASURED WITH RESPECT TO CATHODE POTENTIAL.

4. The instantaneous value of the rate of rise of voltage shall not exceed the value stated.

5. The D.C. resistance shall not be less than 2 kohms. The impedance during the post pulse period defined as $\frac{eg - Ecc}{ig}$ shall not be less than the value given for Zg, where eg and ig are the values of grid voltage and current at any instant, and Ecc is the value of the bias supply voltage.

6. Measured at the 150 volt level.

7. The limits apply to the potential of the grid during the period between completion of recovery and commencement of the succeeding grid pulse.

8. ~~Measured at the 50 volt level.~~ TO BE MEASURED AT THE 40.7% LEVEL.

9. tgd is defined as the time delay of the g2 pulse after the g1 pulse measured at the 150 and 50 volt levels of the leading edges of the g1 and g2 pulses respectively.

10. dib/dt is defined as the maximum instantaneous value of the rate of rise of ib.

11. This test is to be carried out within 60 seconds after the relevent operation test.

12. The sampling inspection shall be carried out as follows:-

Group C 2% of the production shall be inspected. If any failures a further 2% shall be inspected, and if any further failures, shipment shall cease pending negotiations with the Approving Authority.

Group D 2 valves per every 1000 of the production or every six months, which ever is the greater rate, shall be tested. If any failures, shipment shall cease and the Approving Authority shall be notified.

(AL4) Group E tests u,v,w, as Group D, remainder of tests, each at inspection level I, AQL 6.5%

Group F As specified.

Group G 100% testing required. Rejects shall not be shipped.

The following tests are destructive:- Fatigue(W), Shock(Y), All life(bb - gg inclusive) and valves subjected to them shall not be delivered.

13. Grid-cathode breakdown must occur within the period before the application of Anode voltage. The valve shall operate satisfactorily on push-button starting when the anode voltage is applied to the valve, under test in such a manner as to rise from 0 to 13.5 kV within 0.03 seconds. The filter in the rectifier shall be designed so that the anode voltage reached 7 kV (min) within 0.015 seconds. The intervals between successive attempts to instantaneously start the valve shall not be less than 10 seconds, nor greater than 30 seconds. Any valve failing to start within three attempts will be considered a failure.

14. There shall be no evidence of arc back or anode heating.

15. At the end of operation 1 test, the total g2 current shall not exceed the value specified.

16. At the end of the operation 1 test, the bias on grid 2, Ec2, shall be reduced to -50V, and the valve shall continue to operate, controlled and triggered by the grid 2 pulse.

17. TA shall be measured at a point three inches from the tube in the plane through the top of the base cap. If the tube is inclined to the vertical, TA shall be measured at the lowest point consistent with the above. The surroundings of the tube must be such as to permit free convection of air over the bulb. Cooling of the anode lead is permissible, but there shall be no direct air blast on the bulb.

18. This test shall be carried out immediately after a 24 hour holding period.

19. Measured in accordance with paragraph 5.13.4.1 of I.I.E.T. appended to K1001.

20. tad is measured 10 seconds (maximum), after the application of the epy required by the test.

21. 590 seconds after the first tad readings, a second tad reading shall be taken. The difference between these readings (Δtad) is the anode delay time drift.

22. During the operation 1 test, the dummy load shall be short circuited for three periods of 1 second each (min), 2 seconds (max), separated by at least 10 seconds. The charging circuit shall be such that epy, with the load short circuited, is not less than the value specified for normal operation. The modulator shall not trip out more than once.

23. One valve in every four shall be run to 1000 hours. In addition, for standby life, one valve in every eight shall be run to 2000 hours.

24. Measured at the end of the operation 1 or 2 test as appropriate, by observing the waveshape of one of the following:-

(1) Current pulse, (2) Rate of fall of anode voltage, (3) dib/dt,

(4) Grid voltage.

25. For the test the circuit shall be as described in note 27. The recovery impedance shall be between 900 - 1100 ohms, and the bias, measured across the decoupling condenser with the valve running, shall be 100 volts.

26. For this test, the circuit shall as described in note 27. The recovery time shall be measured for the discrete bias levels and recovery impedances indicated below. The bias shall be applied to grid 2 and shall be measured across the grid circuit decoupling capacitor, with the valve running and shall have the values:- -0, -12.5, -25, -50, -100 volts. The recovery impedance shall have ten values over the range 100-30,000 ohms for each bias, adjacent values of resistance having ratios between the limits 1/ 1.5, 1/ 2. The recovery characteristics so obtained shall not be inferior to those shown in figure 3.

27. The circuit for recovery time testing is shown in Fig.2.

A 1kv (min.) probe pulse of rise time 3 - 4/u sec. is applied after a suitable delay via D_3 to the anode of the valve under test. The recovery time is the interval between the instant when the cathode current falls to zero, and the point where the valve just re-strikes.

The isolating circuit allows the re-charging of the P.F.N. without application of voltage to the anode of the valve for the duration of the recovery period.

D_2 serves to remove any inverse voltage from the anode of the valve under test.

The grid 2 circuit ensures that R_2 is not shunted by the driver circuit in the recovery period, thus the recovery impedance is exactly fixed by $R_1 + R_2$.

28. The vibration shall be applied successively in three mutually perpendicular directions one of which shall be the axis of the anode lead. The valve shall be mounted either with the axis of anode lead vertical in a suitable valve holder clamped to a rigid plate, or with the axis of the anode lead horizontal, and the valve screwed to a rigid plate by means of a clamp around the bulb. The frequency shall be swept at a rate not exceeding one octave per minute up to 200 cps and at a rate not exceeding 100 cps per minute above this. All resonances detectable visually or electrically shall be noted, for information only, and for use in the fatigue test below. The additional jitter, tj, due to vibration, shall not exceed the limit stated. The valve shall continue to function whilst undergoing the tests.

29. (a) Each valve shall be subjected to vibration for two periods of ten hours. In one period the direction shall be parallel to the anode lead, and in the other the direction shall be perpendicular to this. The valve shall be mounted as for the resonance search test. The frequency shall be that of the strongest test resonance detected during the resonant search, and of acceleration 2g if within the range 50-200 cps, and 0.5g if in the range 200-500 cps. If no resonances have been detected then the frequency of vibration for this test shall be 150 cps at 2g acceleration.

(b) At the discretion of the manufacturer a swept fatigue test may be used instead of the test in (a) above. In this case the resonance search, but not the microphony test shall be waived. The valve shall be maintained as for the resonance search test and swept frequencies shall be applied for 150 hours each, in the direction of the anode lead, and along one direction perpendicular to the anode lead. The rate of sweep shall not exceed one octave per minute up to 200 cps, and 100 cps per minute above this. The transition from 2g to 0.5g may, at the discretion of the manufacturer, occupy the frequency range 190-210 cps for this swept fatigue test only. Again, at the discretion of the manufacturer the 150 hours may be split into a period of 60 hours with swept frequencies between 50-200 cps at 2g applied at a rate not exceeding one octave per minute, and a period of 90 hours with swept frequencies between 200-500 cps at 0.5g applied at a rate not exceeding 100 cps per minute.

30. The valve shall be subjected to the following cycle, circuit conditions being as for operation 1 :-

(a) 5 minutes heaters and grid drive only.
(b) 20 minutes operation at, epy = 16 kv, prf = 1000 pps.
(c) 5 minutes, no voltages.

The duration of the test shall be the total time, i.e. 2/3 of this time will be with HT ON.

31. The valve shall be operated with Ef = 6.3 volts and with no other voltages. The valve may be operated for a maximum of five minutes each day under Op1 or Op2 conditions at the discretion of the manufacturer. For operation the valve may be transferred from a preheater unit, to a modulator provided not more than 60 seconds elapse.

32. For Type Approval the requirements of K1001/15 apply, ignoring para.15.2.

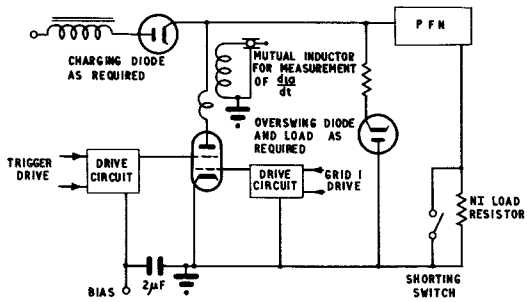

FIG. 1. GENERAL OPERATION TEST CIRCUIT

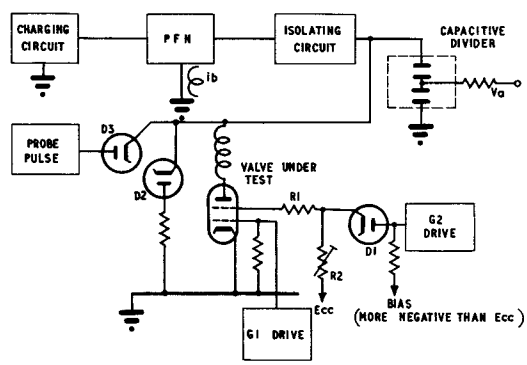

FIG 2 CIRCUIT FOR RECOVERY TIME TEST

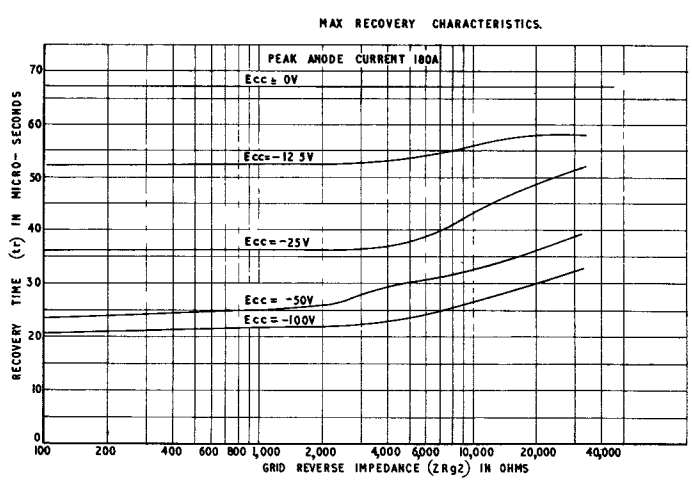

FIG 3. MAXIMUM RECOVERY CHARACTERISTICS AT 180 AMPS FOR 1KV PROBE PULSE

VALVES ELECTRONIC

MINISTRY OF AVIATION D.L.R.D./R.A.E.

C.V. 6065
C.V. 6066
C.V. 6067

Specification MOA/CV. 6065 CV. 6066 CV. 6067	SECURITY	
Issue No. 1 Dated 14.7.60.	SPECIFICATION	VALVE
To be read in conjunction with K.1001, BS.448 and BS.1409	Unclassified	Unclassified

TYPE OF VALVE: Corona Stabiliser Valves.

CATHODE: Cold.

ENVELOPE: Glass.

PROTOTYPE: SC1/1600, SC1/1800, SC1/2000

RATINGS

(All limiting values are absolute)

Operating Voltage		
CV.6065	(V)	1600
CV.6066	(V)	1800
CV.6067	(V)	2000
Normal Operating Current	(μA)	250
Average Incremental Resistance	(KΩ)	50
Temperature Stability	(%/°C)	0.01
Minimum Stable Current	(μA)	20
Maximum Stable Current	(μA)	600

MARKING

See K.1001/4.

BASE

BS.448/B7G

CONNECTIONS

PIN	ELECTRODE	
1	No connection	NC
2	No connection	NC
3	No connection	NC
4	No connection	NC
5	No connection	NC
6	No connection	NC
7	Cathode	k
Top Cap	Anode	a

DIMENSIONS

BS.448/B7G/2.2 Size Ref. No. 4.

DIMENSIONS (mm)	MIN.	MAX.
"A" Seated Height	57.2	66.7
"C" Diameter	16	19
"D" Overall Length	-	73.8

TOP CAP

BS.448/CT1.

NOTES

A. For stabilisers to operate within the range 350 to 1400V, see Specification CV2456, 57, 58, 59, 60, 61 and 62.

B. The Joint Service Catalogue Numbers are:- CV6065:- 5960-99-037-2276
CV6066:- 5960-99-037-2277
CV6067:- 5960-99-037-2278

To be performed in addition to K.1001

All tests are to be performed in the specified order with the valves mounted in total darkness and except where otherwise stated in an ambient temperature of 20° ± 5°C.

The tests specified in clauses "b" to "g" inclusive are to be performed at least 28 days after Test "a".

	Test Conditions	Test	Limits Min.	Limits Max.	No. Tested	Notes
a	Adjust Ia = 250µA	Operating Voltage CV. 6065 (V) CV. 6066 (V) CV. 6067 (V)	 1560 1755 1950	 1640 1845 2050	100%	1 & 2
b	Adjust Ia = 250µA	Operating Voltage CV. 6065 (V) CV. 6066 (V) CV. 6067 (V)	 1560 1755 1950	 1640 1845 2050	100%	1, 2 & 3
c	Adjust Ia = 600µA	Current Stability Meter Fluctuations (µA)	 -	 5	100%	4
d	Adjust Ia = 20µA	Current Stability Meter Fluctuations (µA)	 -	 5	100%	4
e	Adjust Ia = 225µA	Regulation (1) (1) Test as in Test 'b' above but with test conditions modified as in Test Condition column at left. (2) Change in operating voltage between values found in Test 'b' and Test 'e(1)':- CV. 6065 (V) CV. 6066 (V) CV. 6067 (V)	 - - -	 4.5 5.5 6.5	100%	2 & 5
f	Adjust Ia = 275µA	Regulation (2) (1) Test as in Test 'b' above but with test conditions modified as in Test Condition column at left. (2) Change in operating voltage between values found in Test 'b' and Test 'f(1)':- CV. 6065 (V) CV. 6066 (V) CV. 6067 (V)	 - - -	 4.5 5.5 6.5	100%	2 & 5

C.V.6065/6/7

	Test Conditions	Test	Limits Min.	Limits Max.	No. Tested	Notes
g	The valve to be run for a minimum period of 7 hours with Ia = 250µA.	**Stability Test** (1) Test as in Test 'b' above but with test conditions modified as in Test Condition column at left. (2) Change in operating voltage between values found in Test 'b' and Test 'g(1)':- CV. 6065 (V) CV. 6066 (V) CV. 6067 (V)	 - - -	 4.0 4.5 5.0	100%	2 & 6
h	Adjust Ia = 250µA. AMBIENT TEMPERATURE = -30°C Ambient Temperature =+70°C	**Temperature Stability** (1) Test as in Test 'b' but with Test Conditions modified as in Test Condition column at left. (2) Test as in Test 'b' but with Test Conditions modified as in Test Condition column at left. (3) Change in operating voltage between values obtained in Test 'h(1)' and Test 'h(2)' CV. 6065 (V) CV. 6066 (V) CV. 6067 (V)	 - - -	 24 27 30	T.A.	2 & 5

NOTES

1. The valves shall have been in the ageing rack immediately prior to Test 'b'. They shall be quickly transferred to the test position. Time taken to strike shall be less than 0.5 secs.
2. The values of operating voltage are to be recorded.
3. An increase in voltage between the value obtained in Test 'b' and that recorded in Test 'a' shall not be greater than 5V.

   Should the value of operating voltage recorded in Test 'b' be higher than that specified above, the valves are to be held for a further minimum period of 28 days when if the upward drift is still evident the valve shall be rejected.
4. To be performed in an approved circuit.
5. Tests to be completed within 30 secs.
6. On completion of Test 'f' the valves shall be run for the seven hour stability test. The conditions of Note 1 shall apply.

MINISTRY OF AVIATION - DLRD/RRE

VALVE ELECTRONIC **CV6070**

Specification MOA/CV 6070

Issue No. 1 dated 24th June, 1961.

To be read in conjunction with K1001 excluding clauses 5.2 and 5.8

SECURITY	
Specification	Valve
Unclassified	Unclassified

→ indicates a change

TYPE OF VALVE: Broad band T.B. cell

PROTOTYPE: Vx 4176

MARKING

See K1001/4

RATING

All limiting valves are absolute

		Note	
Min. Transmitter Peak power	(kW)	5	
Max. Transmitter Peak power	(kW)	200	
Resonant Frequency	(Mc/s)	9375	A

DIMENSIONS

See drawing on page 5

Note B

NOTES

A. This valve may be used over frequency range 9315 to 9435 Mc/s.

B. At least one washer of the dimensions shown in the Drawing on Page 5 shall be supplied with each valve.

JOINT SERVICE CATALOGUE NUMBER: 5960/99/037/2297

TESTS

To be performed in addition to those applicable in K1001

TEST CONDITIONS: unless otherwise specified:

K1001	Test	Test Condition	AQL %	Insp. Level	Sym-bol	Limits Min.	Limits Max.	Units
5H.4.1,7.2 (a)	GROUP A Tuning Susceptance	Test Frequency (Fo) 9375 Mc/s ± 0.05% Notes: 1,2, and 3		100%		-0.06	±0.06	
5H.4.17.1 (b)	Equivalent Conductance	As for tuning susceptance Notes: 1 and 3		100%		-	0.1	
5H.4.2.1 (c)	Firing Time (secs) i.e. Time interval between application of power and tube firing.	Line to be energised with 4 kW peak R.F. Frequency = 9240Mc/s ± 1.5% tp = 1μsec ± 10% Test to be performed at least 7 days after pumping and not less than 24 hrs. after any previous discharge Notes: 1		100%		-	10	secs
5H.4.2.2 (d)	Arc Loss (dB)	As for firing Test Time Notes: 4		100%		-	0.8	dB
5H.4.25.2 (e)	Recovery Loss (dB) Measured by a signal generator pulse injected 2μsecs after trailing edge of the transmitter pulse	As for Firing Time test except that the line shall be energised with 40 - 50kW peak RF derived from a higher power source through an attenuator of at least 6 dB. Frequency= 9240 Mc/s ± 1.5% tp = 1μsec ± 10% Simulated signal generator frequency 9375Mc/s ± 0.05%		100%		-	2.0	dB
	GROUP B	omitted						
5H.4.18.1.2	GROUP C Loaded Q	Test Frequency = 9375 ± 0.05% Notes: 1 and 5	2.5	1		-	6.5	

TESTS Cont'd.

CV6070

K1001	Test	Test Condition	AQL %	Insp. Level	Sym-bol	Limits Min.	Limits Max.	Units
5H.4.2.3 (b)	GROUP C Cont'd. High level standing Wave Ratio	As for Recovery Test. Load Standing Wave ratio to be less than 1.03:1 Notes: 6	2.5	1		-	1.1	
	GROUP D and E omitted							
5H.5.3	GROUP F Life Test test point 1000 hrs. Tests and limits to be	Frequency 9375 Mc/s ± 5% tp = 0.5 μsecs P.r.f. = 800 Line power = 200kW peak Note: 7 as given in GROUP A		3%				
	GROUP G Electrical retest after 21 days holding period. Recovery time	 Test and limits as given in GROUP A	1	100%				

1. The Valve shall be fitted as shown in the drawing on page 6 and terminated in a matched load.

2. The susceptance may be measured by comparing the phase of the reflection with that of a Valve which is resonant at the test frequency. The susceptance is given by:-

$$\frac{B}{Yo} = \frac{(1 + \frac{2G}{Yo})}{2} \cdot \tan \frac{4\pi \Delta l}{\lambda g} = 1.1 \frac{2\pi \Delta l}{\lambda g}$$

for small Δl and where $\frac{G}{Yo}$ is assumed to be 0.05.

Where λg is the guide wavelength and Δl is the phase shift measured in the same units as λg.

3. A curve of V.S.W.R./frequency is plotted around a centre value of Test Frequency (Fo). See Group A Test Clause (a). The Valve is resonant (B=0) at the frequency corresponding to the maximum V.S.W.R. value. Whence:-

$$r_o = \frac{1}{G/Yo} + 1 \quad \text{therefore} \quad G/Yo = \frac{1}{r_o - 1}$$

If the Valve has passed the susceptance test (B<0.06 Yo), the V.S.W.R. measured at test frequency (Fo) is very nearly equal to $\frac{1}{G/Yo} + 1$ and may be used to measure G.

4. The power loss in the arc shall be less than 680W peak:-

$$\frac{P}{P-PL} = \frac{4000}{4000-680} = 1.20(0.8dB)$$

5. Loaded Q is defined as :-

$$QL = \frac{Fo \frac{dB/Yo}{dF}}{2(1+G/Yo)}$$ where Fo = Test Frequency.

See Group A Test Clause (a)

6. This test may be made at low levels, simulating the arc by a metallic short in intimate contact with the inside of the window.

7. The manufacturer at his discretion may put twice the normal sample size on life test for a period of 500 hours. The criterion for acceptance shall be that the average life expectancy shall be at least 90% where

$$\text{Life Expectancy} = \frac{\text{Total hours of Life operation x 100}}{\text{Total possible hours}}$$

Provided that earlier life tests results were acceptable, shipment of Valves may be permitted from the commencement of a supply contract.

DIMENSIONS OF CV 6070

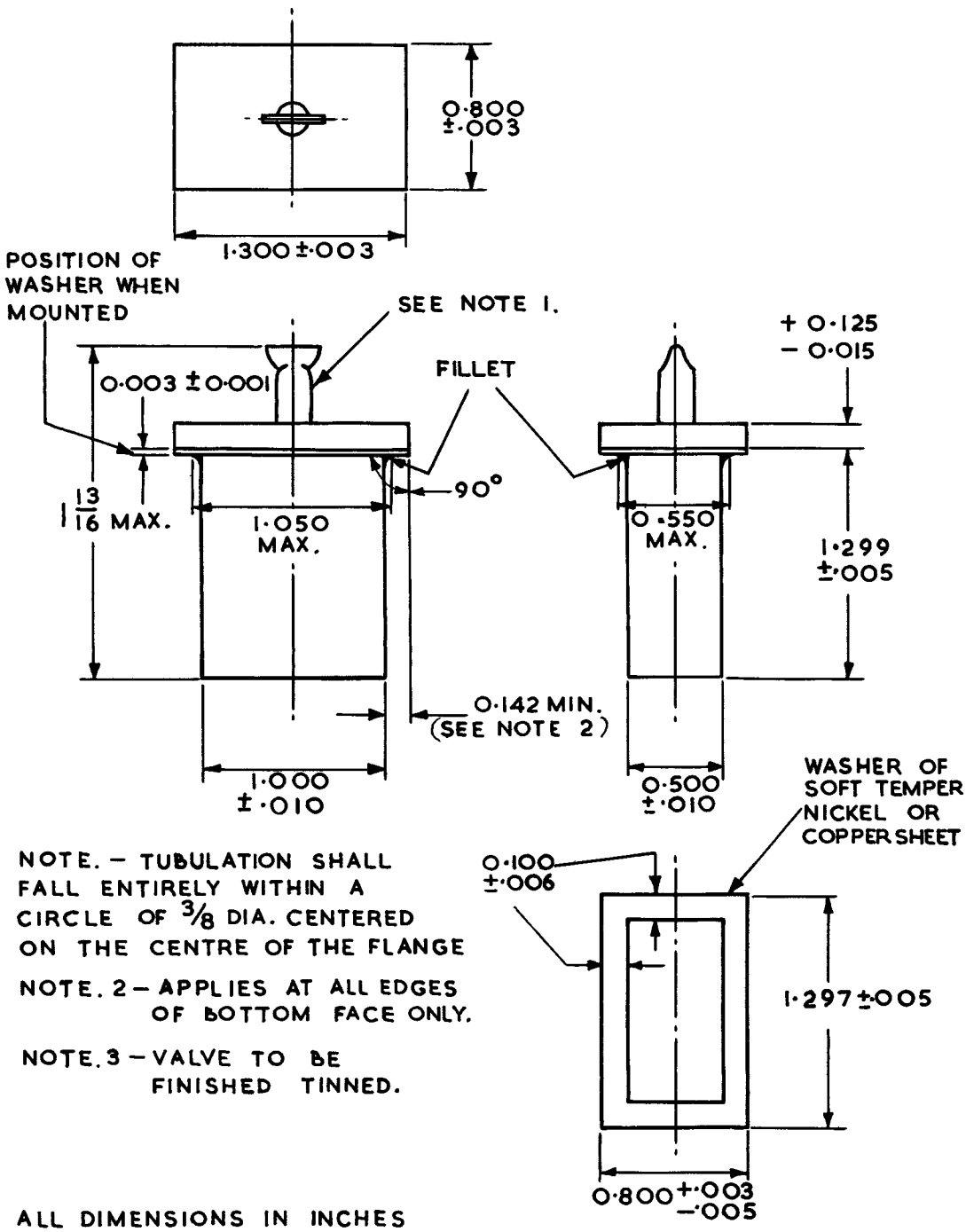

NOTE. – TUBULATION SHALL FALL ENTIRELY WITHIN A CIRCLE OF 3/8 DIA. CENTERED ON THE CENTRE OF THE FLANGE

NOTE. 2 – APPLIES AT ALL EDGES OF BOTTOM FACE ONLY.

NOTE. 3 – VALVE TO BE FINISHED TINNED.

ALL DIMENSIONS IN INCHES

MOUNT FOR TESTING CV6070

NOTE 1 0·015 CUT-AWAY AT SIDE OF WAVEGUIDE MEASURED FROM THE PLANE OF THE INNER SURFACE OF THE TOP OF THE WAVEGUIDE.

NOTE 2 0·030 TO 0·040 SPACING ALL ROUND THE VALVE.

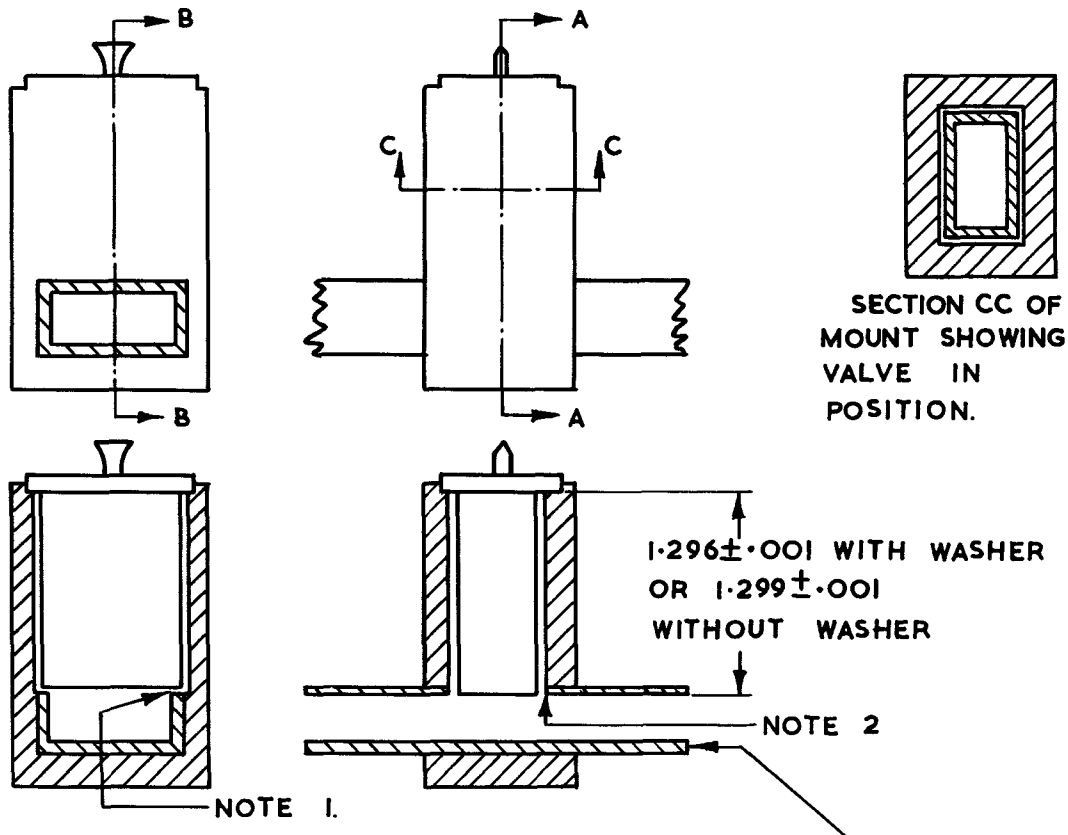

ALL DIMENSIONS IN INCHES

ADMIRALTY SURFACE WEAPONS ESTABLISHMENT

VALVE ELECTRONIC

CV6071

Specification AD/CV6071 Issue No. 1 dated 5th October, 1960. To be read in conjunction with K1006 except where otherwise stated. (Note 3)	SECURITY	
	Specification	Valve
	Unclassified	Unclassified

TYPE OF VALVE: Ruggedised velocity modulated oscillator for use with external cavity resonator.

CATHODE: Indirectly heated

ENVELOPE: Metal and glass

PROTOTYPE: VX5048

MARKING

K1001/4

BASE

Pee Wee 4 pin with modified skirt

See K1006 A4-76

RATINGS

				NOTE
Heater Voltage		(V)	6.3	
Heater Current		(A)	1.2	
Frequency Range		(Mc/s)	2700 to 4100	A
Resonator Voltage	(Normal)	(V)	300	B
Resonator Voltage	(Maximum)	(V)	350	B
Resonator Dissipation	(Maximum)	res (W)	16	C
Reflector Voltage	(Normal)	(V)	-70 to -350	B.D.
Reflector Voltage	(Maximum)	(V)	-500	B
Nominal Power Output at 3100 Mc/s		(mW)	100	E
Maximum Impedance in reflector to Cathode circuit		(MΩ)	0.25	F
Electronic Tuning Range at 3100 Mc/s		(Mc/s)	35	E

CONNECTIONS

Pin	Electrode
1	I.C.
2	Heater
3	I.C.
4	Heater & Cathode
T.C.	Reflector
Discs	Resonator

TOP CAP

CT1. See B.S.448: 6/1.1

DIMENSIONS

See Drawing on Page 6

MOUNTING POSITION

Any

NOTES

A. The valve is designed to plug into an external resonator. The frequency coverage and other properties may be modified considerably by the resonator design. Tests on the valve are confined to the frequency range 2700-4100 Mc/s but frequencies outside this band may be obtained with suitable resonators. Details of the valve seating and contact arrangements are shown in the drawing on Page 6.

B. The voltages quoted are relative to the cathode. The valve is normally operated with the resonator at earth potential.

C. The temperature of the valve envelope must not exceed 150°C.

D. For the frequency band 2700 to 4100 Mc/s the $2\frac{3}{4}$ cycle reflector mode is used. Over this band the normal reflector voltage is given by the formula.

$$Er = Sf - 256$$

where $S = 135V/Kmc/s$

and f = frequency in Kmc/s

The reflector voltage adjustment should allow for $\pm$ 50 volts variations from valve to valve.

E. Measured with Ereo = 300V and the $2\frac{3}{4}$ cycle mode. ΔF measured between the half power points of the mode using a quarter-wavelength radial line resonator.

F. If a high impedance reflector supply is used the circuit must include a diode to prevent Er becoming positive.

G. The Joint Services Catalogue No. is 5960-99-037-2299.

ELECTRON TUBE, KLYSTRON, SEPARATE

CAVITY TYPE CV6071

This specification is to be read in conjunction with K1006 except where otherwise stated. (Note 3).

RATINGS	Ef V	Ec2/Ec3 Vdc	Er Vdc	Pi W	T_{δ} °C	Altitude ft.
Absolute Maximum:		350	-500	16	150	10,000
Normal:	6.3	300	-70 to -350			
Absolute Minimum:			Note 1			

Dimensions: See drawings on Page 6. Cathode: Coated unipotential.

Pee Wee 4 pin with modified skirt. See K1006. A4-76

Pin No.	1	2	3	4	Discs	T.C.
	I.C.	Heater	I.C.	Heater /Cathode	Resonator	Reflector

Test Conditions: (unless otherwise specified)

Ef V	Eres Vdc	Er Vdc	Test Cavities Note 2	Load v.s.w.r.
6.3	300	Adjust for max. power in 2¾ cycle mode.		1.1 max. W.G. No. 10 for cavities A & B W.G. No. 11 for cavities C & D

Qualification Approval Tests:

Ref.	Test	Conditions		Min.	Max.	
3.1	Qualification Approval					
4.5	Holding Period	28 days				
K1005	Carton Drop					
K1001-10	Humidity	No Voltages				
K1001-12	Torque (Note 4)					
	Oscillation (1)					
	Vibration	Note 5	ΔF		0.5	Mc/s
			ΔPo		5	%
	Shock	Note 6	ΔF		3	Mc/s
			ΔPo		5	%

REF.	TEST	CONDITIONS		Min.	Max.	
	Qualification Approval Tests (contd.):-					
	Oscillation (2)	Test Cavity A Note 2				
4.15.1	Power Output		Po	100	-	mW
4.10.7.3.1	Frequency	Difference of frequency from that marked on test cavity A	ΔF	-	±25	Mc/s
4.10.5.4	Reflector Voltage Electronic Tuning:	Record	Er	-70	-120	V
-	Frequency Range)	Difference between values giving 50% of max. Po	ΔF	25	-	Mc/s
-	Er Range)		ΔEr	20	40	V
-	Slope	Er varied ±5V about the value recorded above	$\frac{dF}{dEr}$	0.4	1.5	Mc/s/V
4.15.7.2	Hysteresis			-	50	%
5.15.1	Power Output compared with value at Eres = 300V	Vary Eres from 290-310V	Po	80	120	%
	Oscillation (3)	Test Cavity D Note 2				
4.15.1	Power Output		Po	60	-	mW
4.10.7.3.1	Frequency	Difference of frequency from that marked on test cavity D	ΔF	-	±50	Mc/s
4.10.5.4	Reflector Voltage Electronic Tuning:	Record	Er	-250	-340	V
-	Frequency Range)	Difference between values giving 50% of max. Po	ΔF	17	-	Mc/s
-	Er Range)		ΔEr	45	85	V
-	Slope	Er varied ± 5V about the value recorded above	$\frac{dF}{dEr}$	0.2	0.5	Mc/s/V
4.15.7.2	Hysteresis			-	50	%
4.15.1	Power Output compared with value at Eres = 300V	Vary Eres from 290-310V	Po	80	120	%
	Oscillation (4)	Test Cavity C Notes 2 and 7				
	Excess Noise		S/N	160	-	dB/c.p.s.

CV6071

REF.	TEST	CONDITIONS		Min.	Max.	
	Acceptance Tests:-					
4.5	Holding Period	28 days				
4.10.8	Heater Current		If	1.0	1.35	A
-	Emission	Valve can be mounted in any suitable cavity. Adjust Er for no oscillation Ef varied from 5.8 to 6.8V. Referred to Ires at 5.8V.	Δ Ires	-	15	%
	Oscillation (5)	Test Cavity B Note 2				
4.15.1	Power Output		Po	100	-	mW
4.10.7.3.1	Frequency	Difference of frequency from that marked on test cavity B, Record frequency	ΔF	-	±30	Mc/s
4.10.5.4	Reflector Voltage	Record	Er	-130	-190	V
	Electronic Tuning: Frequency Range	Difference between values giving 50% of max. Po	ΔF	25	-	Mc/s
	Er Range		Δ Er	35	65	V
	Slope	Er varied ± 5V about the value recorded above	$\frac{dF}{dEr}$	0.25	0.85	Mc/s/V
4.15.7.2	Hysteresis			-	50	%
4.10.4.8	Resonator Current	Er as recorded above	Ires	25	45	mA
4.10.6.7.1	Total Reflector Current	Er as recorded above	Ir	-	4	/uA
4.15.1	Power Output compared with value at Eres = 300V	Vary Eres from 290-310V	Po	80	120	%

REF.	TEST	CONDITIONS		Min.	Max.	
	Acceptance Tests (contd.):-					
	Oscillation (6)	Test Cavity C Note 2				
4.15.1	Power Output		Po	60	-	mW
4.10.5.4	Reflector Voltage	Record				
4.10.5.4	Reflector Voltage Tracking: Departure from calculated value	Compare with value predicted from formula in Note D, using values of Er and f obtained in Osc. 5 to determine exact value of parameter S	ΔEr	-	±15	V
4.10.7.3.1	Frequency:	Difference of frequency from that marked on test cavity C	ΔF	-	±40	Mc/s
	Electronic Tuning: Frequency Range) Er Range)	Difference between values giving 50% of max. Po	ΔF ΔEr	23 35	- 65	Mc/s V
	Slope	Er varied ± 5V about the value recorded above	$\frac{dF}{dEr}$	0.25	0.85	Mc/s/V
4.15.7.2	Hysteresis			-	50	%
4.11	Life Test	Note 8 Eh = 6.3 ± 0.1V	t	1000	-	hrs
4.11.4	Life Test End Points: Power Output	Po as a percentage of value at start of test	Po	50	-	%
4.15.7.2	Hysteresis			-	50	%

NOTES

1. Er should never be allowed to be positive.

2. The valves shall be tested in $\frac{1}{4}\lambda$ radial line cavities, having fixed iris coupling into the appropriate waveguide. The cavities shall be similar to the reference cavities (see A.S.W.E. Drawings Nos. CR33966 to CR33996 inclusive) which shall be used only for testing of the test cavities. The nominal characteristics of the test cavities are:-

CAVITY	FREQUENCY Mc/s	NOMINAL LOADED Q QL
A	2695	100
B	3150	200
C	3580	200
D	4070	400

/The .....

The resonant frequency shall be clearly and indelibly marked on each test cavity and shall not differ by more than ± 25 Mc/s from the appropriate value above. The test cavity frequency shall be determined by measuring the frequency of oscillation of at least four valves in the test cavity and in the appropriate reference cavity. Then the resonant frequency for the test cavity is defined as the value marked on the reference cavity plus or minus the average difference determined. The measurements shall be made after warming up the valve and cavity to a frequency within ± 5 Mc/s of its steady value.

3. K1006 shall apply with the exception of paragraphs:-

4.7	4.9.1	4.9.4	4.9.9
4.8	4.9.2	4.9.5	4.9.18
4.9	4.9.3	4.9.8	4.9.19
			4.9.20

4. Water immersion test omitted for both base and cap. Torque of 12 in.lb. shall be applied between the phenolic moulding of the base and the envelope and 1.5 in. lb. between the top cap and the envelope.

5. The valve may be soldered into an approved cavity. The valve shall be vibrated along three mutually perpendicular axes, one of which is the major axis of the valve. The frequencies and amplitudes of vibration are to be as follows:-

FREQUENCY (c.p.s.)	AMPLITUDES (ins.)
2 - 10	± 0.03
10 - 15	± 0.01
15 - 30	± 0.004

The time taken to cover the vibration frequency range must not be less than 5 minutes. Change of frequency and change of power output shall be measured during the vibration test.

6. The valve shall be accelerated along the three axes, in an approved cavity, as in Note 5. The acceleration shall be 30g and the minimum duration 10 milli-seconds.

Frequency and power output shall be measured before and after the complete shock test.

7. The ratio of signal to average noise over a 10 Mc/s bandwidth centred at 30 Mc/s away from the C.W. frequency shall not be less than 160 dB/c.p.s. A broadband non-balanced mixer shall be used throughout the noise tests. For the purpose of the noise measurement, a CV1881 coupled to a suitable S Band waveguide mount may be employed as the comparison standard.

8. The valve shall be life tested in a suitable cavity in thermal connection with a heat sink, which must ensure that the valve envelope temperature does not exceed 150°C. A sample of six valves may be selected for Qualification Approval tests and Qualification Approval given if the average of the lives is not less than 1000 hours. For production testing a minimum of 1% shall be subjected to life test.

RECOMMENDED METHOD OF CLAMPING REFERENCE SEATING

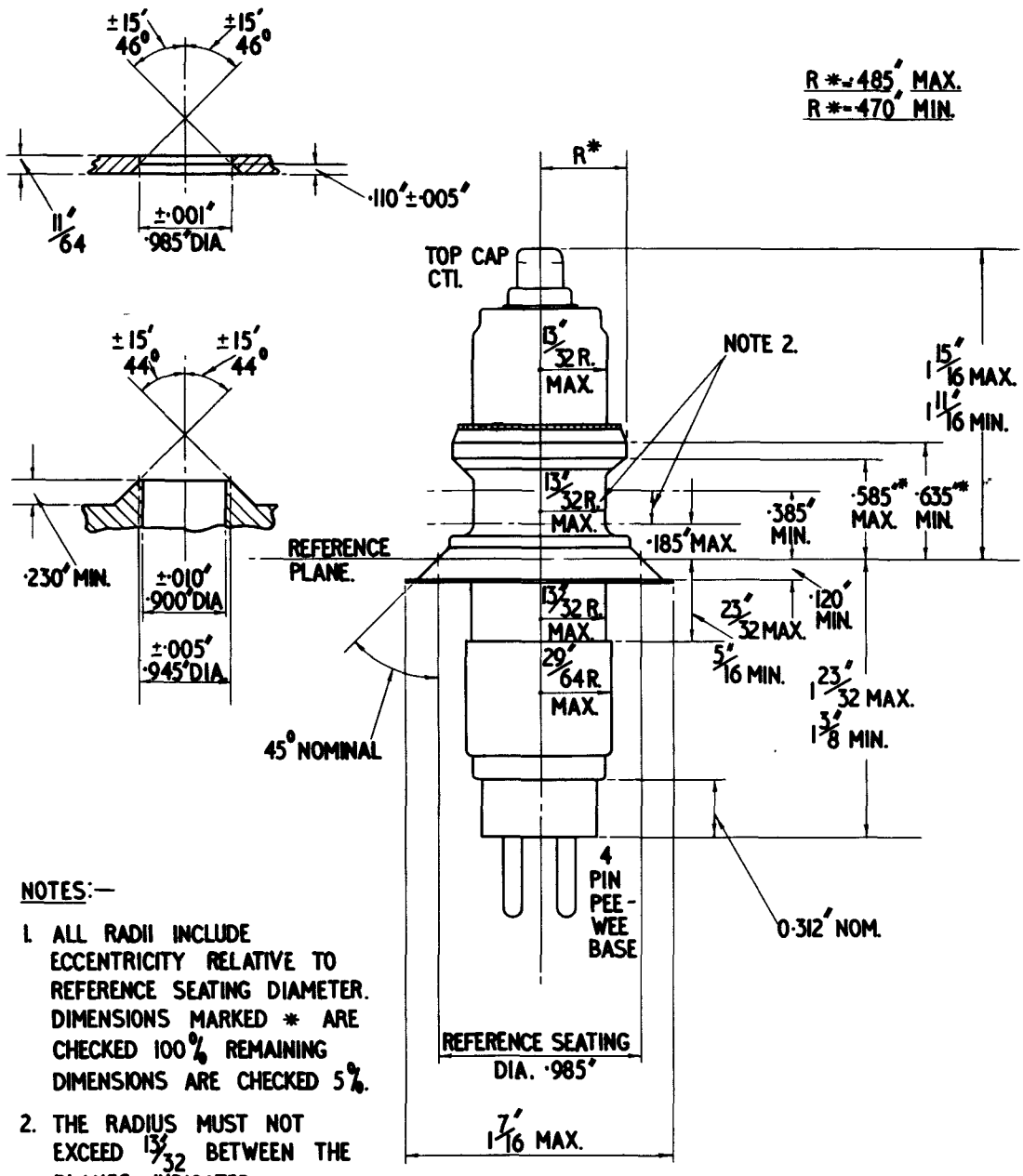

NOTES:—

1. ALL RADII INCLUDE ECCENTRICITY RELATIVE TO REFERENCE SEATING DIAMETER. DIMENSIONS MARKED * ARE CHECKED 100% REMAINING DIMENSIONS ARE CHECKED 5%.
2. THE RADIUS MUST NOT EXCEED 13/32 BETWEEN THE PLANES INDICATED. CAVITY DESIGNERS PLEASE NOTE.

VALVE ELECTRONIC CV6072

Specification MOA/CV 6072 Issue 2 Dated 24th Feb. 1965 To be read in conjunction with K1001	SECURITY Specification: Unclassified Valve: Unclassified

← Indicates change

TYPE OF VALVE: Packaged Magnetron

CATHODE: Unipotential, indirectly heated

PROTOTYPE: VX8241C

MARKING

See K1001/4
Additional marking:-
Factory assembly number

RATINGS AND CHARACTERISTICS

Not for Inspection Purposes.
All limiting Values are absolute and non-simultaneous.

			NOTE
Heater voltage start	(Vrms.)	6.3±7%	D
Heater current at Vh=6.3Vrms	(Arms.)	1.2	
Max. peak anode current	(mA)	180	
Min. peak anode current	mA	110	
Max. peak input power	(W)	160	
Max. mean anode input power	(W)	60	
Max. duty cycle	(Ratio)	0.5	
Max. pulse duration	(μSec)	6	
Max. rate of rise of voltage	(kV/μSec)	5	C
Max. anode temperature	(°C)	140	A
Min. cathode heating time	(Secs)	150	B
Nominal operating frequency	(Mc/s)	8800	
Nominal pulse voltage	(V)	800	

CONNECTIONS & DIMENSIONS

See drawing on Page 6 ←
WG16. Bolted Flange (DEF 5362)

MOUNTING SUPPORT

By means of studs in the output flange, see Page 6 ←

MOUNTING POSITION

Any

WEIGHT

Approximately 1.1 lbs

JOINT SERVICE CAT. NO.

5960-99-037-2300

NOTES

A. Measured at the point specified on the outline drawing on page 6 ←

B. The cathode heating time should be greater than 150 seconds for ambient temperatures above 0°C and greater than 180 seconds for ambient temperatures between -55°C and 0°C.

C. For rating purposes only, the rate of rise of pulse voltage, is defined as the steepest tangent to the leading edge of the voltage pulse, measured for voltages which are in excess of 80% of the running voltage of the magnetron.

D. The heater voltage should be reduced when the valve is running, otherwise life may be impaired. The value may be obtained from the table below. For intermediate anode current obtain the heater voltage by linear interpolation. ←

Vh, volts rms	Ia, mA mean
6.3 ± 7%	0
5.5 ± 7%	30
4.5 ± 7%	60

TESTS

To be performed in addition to those applicable in K1001, and with particular reference to section 5F. See also Note 14.

Conditions for oscillating tests. Test condition P or Q as required except where otherwise stated for individual tests. These shall be at the discretion of the manufacturer where limits are given, provided they satisfy these limits.

Test Cond.	Vh	Ia	PRF	tp	rrv	VSWR	du
		mA, mean	pps	μsecs	kV/μs	ratio	ratio
P	-	60	100 kc/s	4	5 min	1.05 max	0.4 ± 5%
Q	-	30	50 kc/s	4	5 min	1.05 max	0.2 ± 5%
Notes	2	-	-	-	1	15	-

Test	Test Conditions	Limits		Units	Notes
		Min.	Max.		
Group A	All tests in this group to be carried out at 100% inspection level				
(a) Heater current	No pulse voltages, Vh = 6.3 volts rms for 2 minutes min.	1.1	1.3	Amps rms	
(b) Peak anode voltage	P	750	850	Volts	
(c) Mean power output	P	7.5	-	Watts	
(d) Frequency	P	8770	8830	Mc/s	
(e) Pulling factor	P, Load VSWR = 1.5 min.	-	15	Mc/s	
(f) Bandwidth (1)	P, Ia pk = 110 and 180 mA, VSWR = 1.3 min, all phases	-	2.5/tp	Mc/s	3
(g) Sidelobes (1)	P, Ia pk = 110 and 180 mA, VSWR = 1.3 min, all phases	6	-	db	3,4
(h) Missing pulses (1)	P, Ia pk = 110 and 180 mA VSWR = 1.3 min, all phases	-	1	%	9
Group B and C	No tests.				
Group D	See note 10 for inspection levels				10
(j) Bandwidth (2)	Q		2.5/tp	Mc/s	3
(k) Sidelobes (2)	Q	6	-	dB	3,4
(m) Missing pulses (2)	Q Ia pk = 110 and 180 mA		1	%	9
(n) Pushing factor	Q	Record		Mc/s/mA	5

CV6072

Test	Test Conditions	Limits		Units	Notes
		Min.	Max.		
Group E	See note 11 for inspection levels.				11
(p) Microphony	P, with vibration		120	Kc/s	6
(q) Temperature coefficient	P, with anode block temperature = 100°C		-0.25	Mc/s/°C	7
(r) Shock	No voltage, hammer angle = 15°		-	-	
(s) Post shock	Valve must pass all tests in Group A				
Group F	See note 12 for inspection levels				12
(t) Life	P	500	-	hrs	
(u) Life end point	Valve must pass all tests in Group A				
(v) Shelf Life	No voltages	1	-	Year	13
Group G	All tests in this group to be carried out at 100% inspection level.				
(w) Holding period	No voltages	14	-	days	
(x) Missing pulses (3)	P, Ia pk = 180 mA	-	1	%	8,9

NOTES

1. K1001 5F 2.5.5 is waived, and instead the manufacturer shall comply with the following:-

   "The rate of rise of pulse voltage, is the value of dV/dt at the onset of RF oscillations and shall not be less than that specified."

   The rrv shall be measured with a suitable differentiator.

2. The heater starting voltage shall be 6.3 volts rms and shall be reduced within five seconds of applying E.H.T. For Ia = 30mA mean, Vh = 5.5 volts rms; for Ia = 60mA mean, Vh = 4.5 volts rms.

3. To be measured with an RF spectrometer. The main lobe shall be such that the sign of the slope between the 6 dB levels changes once only.

4. The ratio of the maximum power in the main lobe to the maximum power in any of the sidelobes shall be greater than 6 dB.

5. The pushing factor may be measured by modulating the anode current by ± 10% with a 50 c/s waveform.

6. The vibration shall be separately applied in each of three mutually perpendicular directions, one of which shall be perpendicular to the plane of the flange. The vibration shall have accelerations of 2g for 25 c/s to 150 c/s, and $\frac{1}{2}$g for 150 c/s to 500 c/s.

7. To be measured with the anode temperature at 100°C.

8. Immediately following the holding period, 6.3 volts shall be applied to the heater for 2 minutes maximum, then the EHT shall be applied to give 180 mA peak anode current. The valve shall meet the requirement by the end of the fifth minute of running. After the shelf storage, similar conditions apply except that the valve shall meet the requirement after the 15th minute of running.

9. A missing pulse is defined as an RF pulse which has less than 70% of the average energy of a normal pulse in the band 8720 - 8880 Mc/s.

10. Ten percent of the production to be inspected at regular intervals during production to be agreed with the inspector. The manufacturer may use each sample for any of the tests in this group at his discretion. If a failure occurs on any test, 100% inspection shall be carried out for that test only until the inspector decides that sample testing can be resumed. Failure will not be shipped.

11. For any level of production, one sample initially and then one every 50th valve shall be tested. The same valve may be used for each test at the discretion of the manufacturer. If any failures 100% inspection will be carried out on the test for which the failure occurred until the inspector is satisfied that normal sample inspection can be resumed. Failures will not be shipped.

12. The scale of life testing shall be related to the production. For production orders of less than 51, one valve shall be life-tested. For production orders of greater than 50, the production shall be divided into batches of 50 and one valve from each shall be life-tested. The batch corresponding to the valve undergoing the life test shall not be released until the life test has completed 80% of the required life. At the option of the manufacturer and at his expense any number of additional valves may be life tested, in which case the average of the lives of these valves shall exceed 80% of the required life before the batch can be released.

13. Five percent of the production shall be stored for one year. The valves shall pass all Group A tests after this period, and test (h) shall be the first to be carried out. Failures shall be reported to the Approving Authority.

14. The valve shall be inspected against the outline drawing on page 6 , and the gauge on page 5 .

15. This is the VSWR presented to the output of the magnetron by the waveguide bench. ←

The input flange of the bench shall be a WG 16 bolted flange as specified in DEF 5352.

CV6072

GAUGE

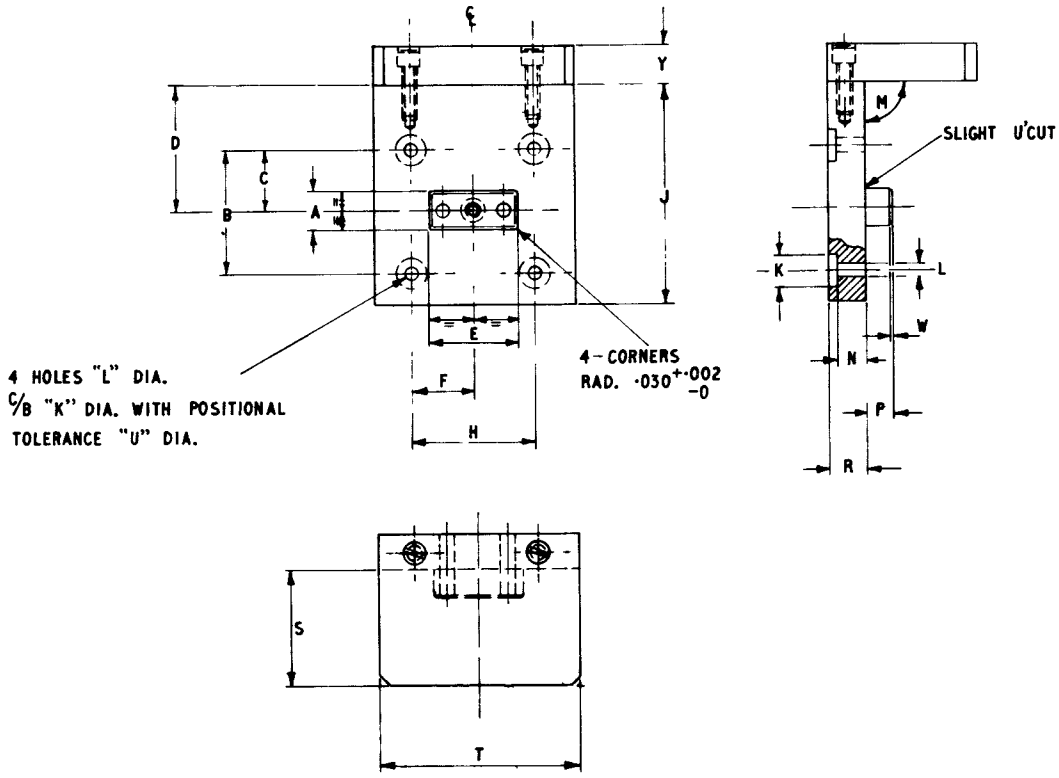

INDEX	INCHES		METRIC	
	MAX.	MIN.	MAX.	MI..
A	0·398	0·397	10·11	10·084
B	1·280	BAS.	32·51	BAS.
C	0·64	BAS.	16·255	BAS.
D	1·260	1·256	32·00	31·90
E	0·898	0·897	22·81	22·786
F	0·61	BAS.	15·49	BAS.
H	1·220	BAS.	30·98	BAS.
J	2·26	2·24	57·4	56·9
K	0·38	0·36	9·65	9·15
L	0·170	0·1695	4·318	4·305
M	90° ± 5'		—	
N	0·280	0·276	7·1	7·0
P	0·26	0·24	6·6	6·1
R	0·354	0·350	9·0	8·9
S	1·27	1·23	32·25	31·25
T	2·02	1·98	51·3	50·3
U	0·0005	—	0·0127	—
W	0·04	0·03	1·0	0·75
Y	0·38	0·36	9·65	9·15

NOTE

1. GAUGE TO CHECK THE STUD LENGTH, POSITION OF STUDS, AND HEIGHT OF MAGNET.
2. GAUGING FACES OF RECT. BLOCK TO BE SQUARE & PARALLEL, AND IN CORRECT RELATIONSHIP TO HOLES "L".

OUTLINE DRAWING
(FIRST ANGLE PROJECTION)

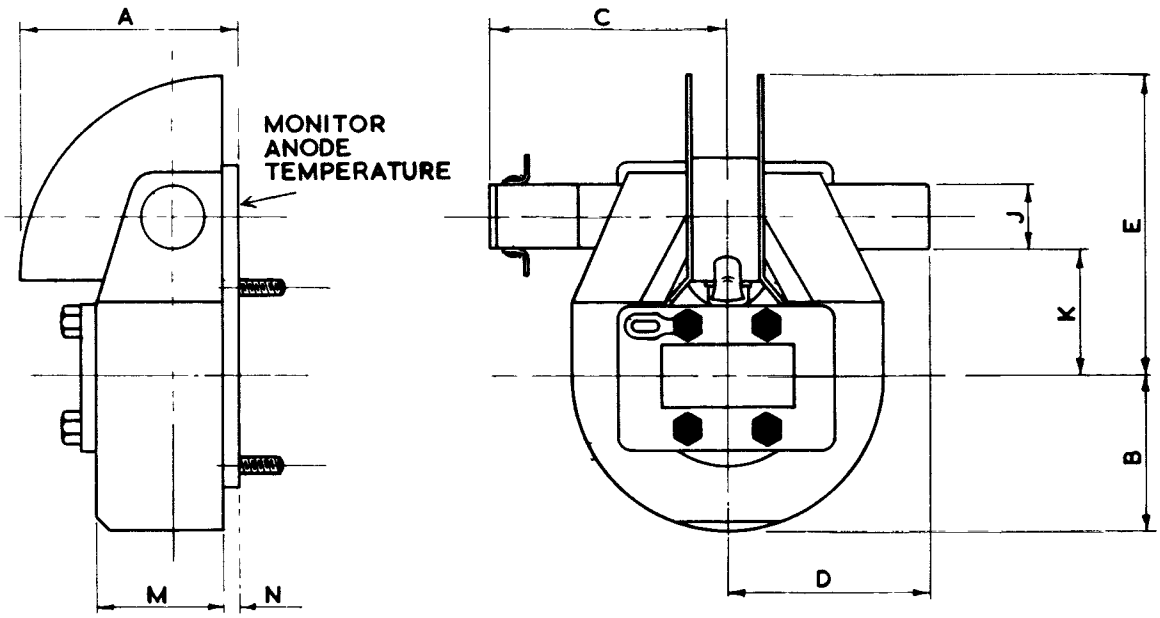

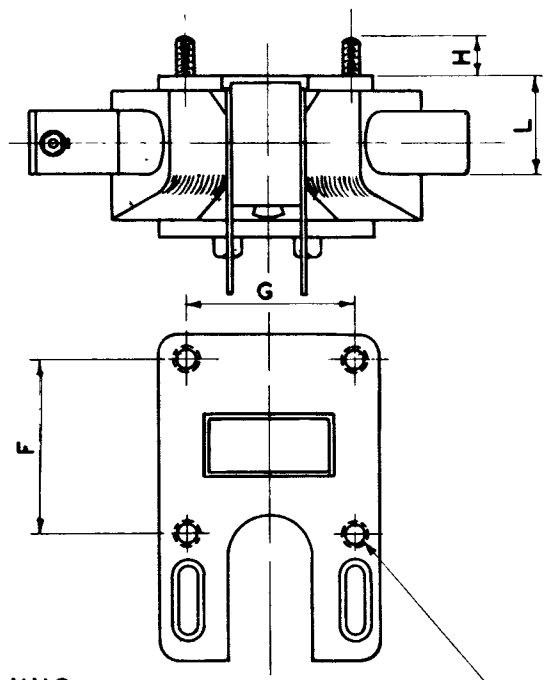

DIM.	M.M/INS
A	45 MAX
B	32 MAX
C	44 MAX
D	44 MAX
E	60 MAX
F	1·280"
G	1·220"
H	7-9
J	13 MAX
K	29 MAX
L	20 MAX
M	25 MAX
N	$\frac{1"}{8} + \frac{1"}{32}$

SECURING SCREWS = No.8 (0·164)" 32 U.N.C.

POSITIONAL TOL 0·004" DIA.
STUD DIA. 0·165" MAX.

DIMENSIONS IN MILLIMETRES UNLESS OTHERWISE STATED

VALVE ELECTRONIC

C.V.6073

MINISTRY OF AVIATION. DLRD/RAE

Specification MOA/CV 6073 Issue No. 1 Dated 1.2.61 To be read in conjunction with K1001, K114,	SECURITY SPECIFICATION: Unclassified VALVE: Unclassified

TYPE OF VALVE:- Power Limiting Gas Cell PROTOTYPE:- VX1046 (Modified CV6006)	MARKING See K1001/4

RATINGS			NOTES
Max. Operating Frequency Range	(Mc/s)	7000-11500	
Max. Peak Power	(W)	100	
Min. Primer Supply Voltage	(V)	-600	B
Primer Current	(μA)	100	A

CONNECTIONS

See drawing on Page 6

DIMENSIONS

See drawing on Page 6

PACKAGING

K1001/14

NOTES

A. The primer current shall be limited by a series resistance of 4 M.Ohms, 1 M.Ohm of which is incorporated in the cell terminal.

B. The primer supply voltage to be negative with respect to the cell body.

C. The Joint Services Catalogue Number is 5960-99-037-2327.

TESTS

To be performed in addition to those applicable in K1001.
The tests (clauses a to e inclusive) are to be performed after a minimum holding period of 7 days.

TEST CONDITIONS:

For all electrical tests Vprimer = -600v. Note 1.

	TEST	TEST CONDITION	Insp Level	Limits Min	Limits Max	Units
a.	Primer Breakdown	Note 6	100%	-	30	Secs
b.	Primer Operating Voltage		100%	260	360	V
c.	Insertion Loss	The valve shall be mounted between matched impedances (V.S.W.R. better than 1.1:1). The line shall be energised by R.F. power not exceeding 10 mW. Primer Current adjusted to 100μA.	100%			
	1. f=7000 Mc/s			0.75	1.25	db
	2. f=7500 Mc/s			0.55	1.05	db
	3. f=8000 Mc/s			0.20	0.70	db
	4. f=8500 Mc/s			0.40	0.90	db
	5. f=9000 Mc/s			0.50	1.00	db
	6. f=9500 Mc/s			0.85	1.35	db
	7. f=10000 Mc/s			0.60	1.10	db
	8. f=10500 Mc/s			0.20	0.70	db
	9. f=11000 Mc/s			0.70	1.30	db
	10. f=11500 Mc/s			1.75	2.75	db
d.	Pulse Recovery Time	The frequency of the simulated echo pulse shall be within the range 9000 Mc/s to 9500 Mc/s and its power incident on the cell shall not exceed 10 mW Pulse length=1μSec and p.r.f. = 1000 p.p.s The frequency of the transmitter pulse shall be within the same range and the peak power 10 W. Notes 2, 3.	100%	-	50	μSecs
e.	Leakage Power	Vary peak input power from 10 mW to 10 W. Pulse length = 1μSec. and p.r.f. = 1000 p.p.s. Note 2	100%			
	1. f=9000 Mc/s				300	mWpk
	2. f=9400 Mc/s				300	mWpk
	3. f=9800 Mc/s				300	mWpk

	TEST	TEST CONDITIONS	Insp. Level	Limits Min.	Limits Max.	Units
f.	Life Tests d.c. Primer Life	Primer voltage to be applied for a minimum period of 1500 hours.	5% or 6 sample valves (which-ever is greater)			
	Life Test End Points (1500 hours)					
	Repeat test clauses "a" to "e" inclusive.	These tests shall be carried out at intervals of 100 hours. Notes 4, 5.		The limits as specified in test clauses "a" to "e" incl. shall apply. Note 4.		
	Mechanical and Environmental Tests.					
g.	Vibration Endurance	The valves to be vibrated in three mutually perpendicular planes for 8½ hrs. (total 51 hours) at each of the following frequencies and acceleration. 1) f=20 c/s, g = 1.3 2) f=50 c/s, g = 3.0	T.A.			
	Post Vibration Endurance Tests 1) Visual Inspection 2) Repeat test clauses "a" to "e" incl.			There shall be no visual defects. The limits as specified in test, clauses "a" to "e" incl. shall apply		
h.	Resonance Search	K1001 Section 11.2 The valves to be vibrated in three mutually perpendicular planes over the frequency range 5c/s to 2kc/s at a constant acceleration of 2g. Rate of sweep of frequency shall not exceed one octave per minute from 5 c/s to 200 c/s.	T.A.			
	1) Resonances			No resonance shall be detected		
	2) Modulation of Primer Current				1	uA/g

	TEST	TEST CONDITIONS	Insp. Level	Limits Min	Limits Max	Units
j.	Shock Post Shock Tests 1) Visual Inspection 2) Repeat test clauses "a" to "e" incl.	K1001 Section 11.4 Hammer Angle = 30° No voltages		There shall be no visual defects. The limits as specified in test clauses "a" to "e" incl. shall apply.		
k.	Linear Acceleration (Centrifuge) Post Acceleration Tests 1) Visual Inspection 2) Repeat test clauses "a" and "b"	The valves to be subjected to a linear acceleration of 13 g in each of three mutually perpendicular planes. Duration of max.g = 1 min.	T.A.	There shall be no visual defects. The limits specified in test clauses "a" and "b" shall apply.		
l.	Climatic Post Climatic Tests 1) Visual Inspection 2) Repeat test clauses "a" to "e" incl.	The valves to be subjected to the following environments in the sequence specified. 1) Dry Heat K114/5.9 T=90°C t = 12 hrs. 2) Low Temp.K114/5.20 T= -65°C t = 12 hrs. 3) Damp Heat K114/5.11 T=40°C R.H.=95% t = 12 hrs. 4) Low Temp/Low Pressure K114/5.21 T= -65°C P = 5mm Hg, t = 12 hrs. 5) Repeat tests 3 and 4 sequentially, three times. 6) Tropical Life K114/5.13 T.vary 20°C-35°C, R.H.=95% t = 28 days. 7) Fine Mist K114/5.16	T.A.	There shall be no visual defects. The limits specified in test clauses "a" to "e" incl. shall apply.		

C.V.6073

NOTES

1. The primer supply shall be D.C. having a ripple voltage less than 1% and shall be negative with respect to the body of the cell. The regulation of the supply shall be negiligible at load currents up to 300mA. The supply shall be connected to the primer through resistances totalling 4 M.Ohms ± 5%, 1 M.Ohm of which is incorporated in the cell terminal.

2. An approved tunable magnetron of suitable frequency shall be used (CV2421 or suitable frequency variant).

3. The time shall be measured from the trailing edge of the transmitter pulse to a point where the insertion loss exceeds that immediately before the transmitter pulse by 6 db.

4. At the conclusion of the Post Life Tests, the batch shall be acceptable if not more than 1 valve fails to meet the limits specified in test clauses "a" to "e" inclusive. If more than 1 failure occurs the batch shall be rejected.

5. To enable further Life Test information to be obtained Post Life Test records will be submitted to the Specification Authority.

6. To be performed at least seven days after any previous discharge.

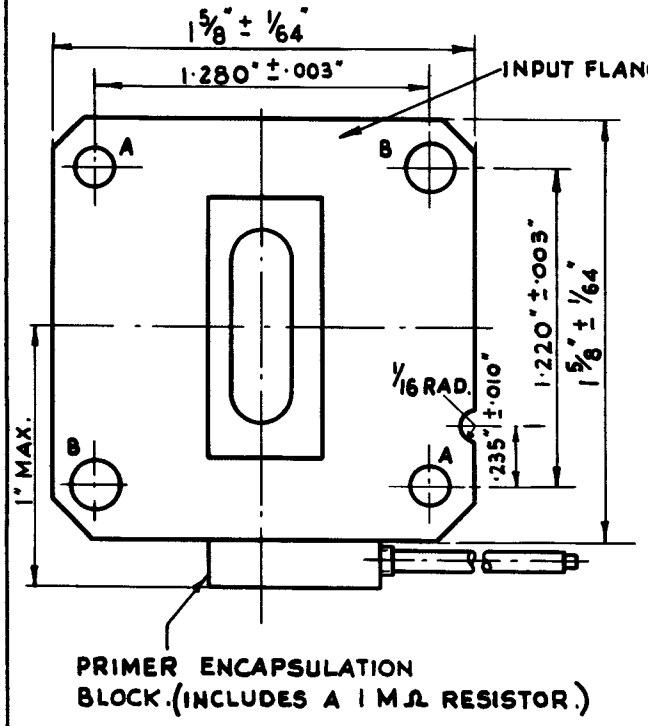

A HOLES - 2 HOLES IN EACH FLANGE ·150" DIA ± ·002" COAXIAL TO EACH OTHER.

B HOLES - 2 HOLES IN EACH FLANGE ·170" DIA ± ·002" COAXIAL TO EACH OTHER.

THESE HOLES ARE POSITIONED AS SHOWN & ARE ON A 1·768" ± ·004" PITCH CIRCLE DIAMETER.

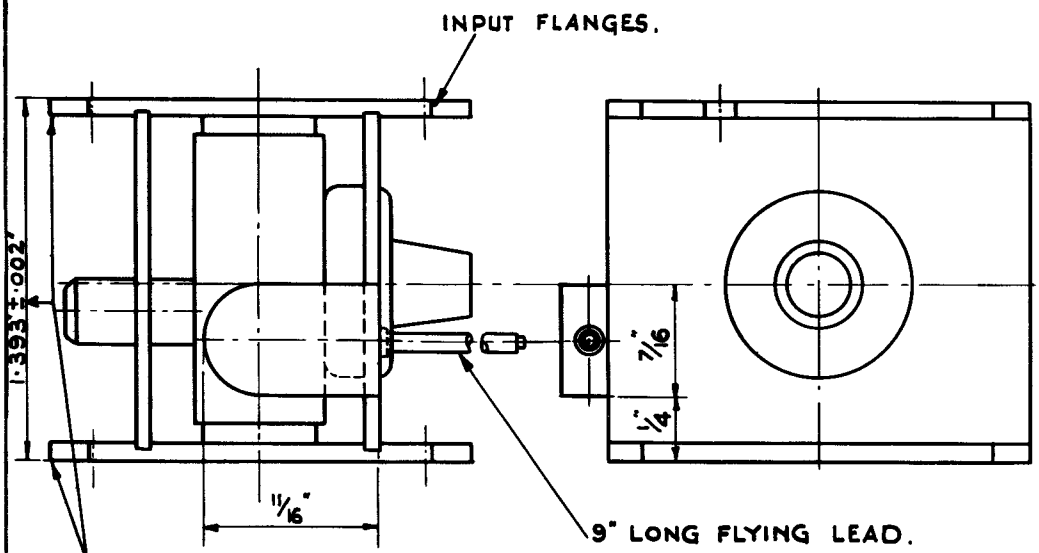

OUTLINE DRAWING.

VALVE ELECTRONIC

ADMIRALTY SURFACE WEAPONS ESTABLISHMENT

CV6076

Specification AD/CV6076 Issue No. 1. Dated 18.1.61. To be read in conjunction with K1001 and BS1409	SECURITY	
	Specification	Valve
	Unclassified	Unclassified

TYPE OF VALVE: Voltage Tuned Oscillator (C band) with Permanent Magnet.

CATHODE: Indirectly heated.

ENVELOPE: Glass enclosed in a metal shell.

PROTOTYPE: VX7143

MARKING

See K1001. The Serial Number shall be included.

RATINGS

(All limiting values are absolute)

		Note
Heater Voltage (Nom.) (V)	6.3	A
Heater Current (Max.) (A)	1.5	
Heater Current (Surge) (A)	4.0	
Min. Total Tuning Range (Mc/s)	4000 to 7500	B
Delay line Voltage (Min.) (V)	255	C
Delay line Voltage (Max.) (V)	1500	D
Cathode Current (Max.) (mA)	17	
Anode Voltage (Max.) (V)	300	
Anode Current (Max.) (mA)	3	
Negative Grid Voltage (Max.) (V)	200	
Power Output (Min.) (mW)	20	

BASE

6 pin plug A.P.20864G (Note H)

CONNECTIONS

PIN	ELECTRODE
A	Heater h
B	Heater h
C	Cathode k
D	Anode a
E	Delay line dl
F	Grid g

The power output terminal at the valve is an approved Type C jack socket for coaxial connection to a 50 ohm coaxial line cable (Note G)

DIMENSIONS

See drawings on Pages 6 and 7

NOTES

See page 2.

NOTES

A. The H.T. voltages shall not be applied until at least two minutes after the application of the heater voltage. In all cases the delay line voltage must be applied before the anode voltage.

B. The valve is tuned by varying the delay line voltage V_{dl}. The relationship between frequency and V_{dl} is approximately as given by the curve shown on page 8.

C. The valve oscillates at a frequency of 4000 Mc/s at a delay line voltage not lower than 255V.

D. The valve oscillates at a frequency of 7500 Mc/s at a delay line voltage not higher than 1350V.

E. The valve must be air-cooled, via the air input provided. An air flow of 10 cu. ft./min. at $\frac{1}{2}$" S.W.G. will be sufficient at 20°C. ambient.

F. The magnetic field required to focus the electron beam is provided by a permanent magnet, which is an integral part of the valve. External magnetic fields or ferro-magnetic objects may distort the focussing field and cause noise and modulation. The valve should be kept at least 8" away from other magnets or ferrous objects if low noise output is required. It is recommended that the valve be stored in its crate, or in a similar stowage when it is not required to be in its associated equipment.

G. The coaxial output from the valve, the cooler assembly, and the delay line are isolated from the shell which should be earthed. The insulation resistance between all electrodes and the shell with 2 kV d.c. applied is greater than 100 Megohms. The coaxial output is not isolated from the delay line and, if the cathode is to be run at earth potential, a suitable coaxial line isolator must be used.

H. The base is rigidly attached to the metal shell and its pins are connected to the valve terminals by flexible leads.

J. Joint Services Catalogue No. is:- 5960-99-037-2360.

CV6076

TESTS

To be performed in addition to those applicable in K1001 Tests and in the specified order, unless otherwise agreed with the Inspecting Authority.

Test Conditions - Unless Otherwise Specified
V_h = 6.3V a.c. Vg = 0. Va = Vo (See Test b)
Cooling Air:- 10 cu. ft./min. at ½" S.W.G. V.S.W.R. = 1.5 Max.

	Test	Test Conditions	No. Tested	Symbol	Limits Min.	Limits Max.	Unit
a	Heater Current (After two minutes)		100%	I_h	0.8	1.0	A
b	Oscillation at 4000 Mc/s	Adjust V_{dl} for test frequency. Adjust Va for Ik = 10 mA. Va = Vo (Record value Vo)	100%				
	(i) Delay line Voltage			V_{dl}	255	295	V
	(ii) Anode Voltage			Va	125	250	V
	(iii) Anode Current			Ia	-	3	mA
	(iv) Power Output	Notes 2 and 3.		Po	20	-	mW
c	Oscillation at 5750 Mc/s	Adjust V_{dl} for test frequency.	100%				
	(i) Delay line Voltage			V_{dl}	570	690	V
	(ii) Cathode Current			Ik	-	13	mA
	(iii) Anode Current			Ia	-	3	mA
	(iv) Power Output	Note 2.		Po	20	-	mW
d	Oscillation at 7500 Mc/s	Adjust V_{dl} for test frequency.					
	(i) Delay line Voltage			V_{dl}	1150	1350	V
	(ii) Cathode Current			Ik	-	17	mA
	(iii) Anode Current			Ia	-	3	mA
	(iv) Power Output	Note 2.		Po	20	-	mW
e	Cut-Off	Adjust V_{dl} over range necessary for 4000 - 7500 Mc/s. Va = 0.	100%				
	Power Output			Po	-	0	mW
f	Grid Insulation	V_{dl} as for test d. Vg = -100V.	100%				
	Grid Current			Ig	-	40	µA
g	Noise	Adjust V_{dl}	100%	dB/ c.p.s.	150	-	dB
	All frequencies 4000 to 7500 Mc/s.	Notes 4 and 11.					
	Frequency Pulling At 4000, 5750 and 7500 Mc/s.	Notes 2 and 5.	100%	Δf	-	10	Mc/s

TESTS (Contd.)

	Test	Test Conditions	No. Tested	Symbol	Limits Min.	Limits Max.	Unit
j	Heater-Cathode Insulation	V_{d1} = 0 Va = 0 Note 6.	100%	I_{h-k}	-	500	/uA
k	Insulation Resistance	No operating voltages. 2 kV d.c. applied between test electrode and shell of valve.	100%				
	(i) Shell to lined collector			R_{coll}	100	-	M ohm
	(ii) Shell to cathode/ heater			R_k	100	-	M ohm
	(iii) Shell to Anode			Ra	100	-	M ohm
	(iv) Shell to Grid			Rg	100	-	M ohm
	Life	Adjust V_{d1} for 5750 Mc/s	T.A. and 2%				
	Time			t	1000	-	Hours
	Power Output	Notes 2 and 7.		Po	10	-	mW

NOTES

1. Vibration tests (as agreed with the specifying authority) shall be carried out on the type approval samples, and a note on the performance of the valve under vibration conditions shall be included at a later date for the guidance of users.

2. The frequency shall be set to within $\pm \frac{1}{2}\%$.

3. The manufacturer to supply with each valve:

   (i) a frequency versus V_{d1} characteristic covering the range 4000 to 7500 Mc/s. There must be no frequency discontinuities over this tuning range.

   (ii) a power output (Po) versus V_{d1} characteristic covering the range of frequencies from 4000-7500 Mc/s. The power output shall not fall below 20 mW at any point in this range.

   (iii) an anode modulation characteristic Po/Va taken at 4000, 5750 and 7500 Mc/s.

4. The heater supply shall be d.c. or rectified and smoothed a.c. A broadband (non-balanced) mixer shall be used throughout noise tests. The noise output shall be indicated on a visual display. The following tests are to be made:-

   The ratio of signal to average noise over 1 Mc/s bandwidth varied between 55 Mc/s and 65 Mc/s shall not be less than 150 dB/c.p.s.

   The time taken in this test for each sweep over the carrier range of 4000 to 7500 Mc/s shall not be less than two minutes.

NOTES (Contd.)

5. The pulling frequency is the difference between the max. and min. frequencies recorded, when a mismatch placed in the output section is varied through all phases. The v.s.w.r. of the mismatch shall lie between 1.5 - 1.6 at each microwave frequency.

6. The maximum permissible leakage current to apply in this case for the Heater - Cathode Leakage Test (K1001 - paragraph 5.3) shall be 500 μA.

7. The life of a valve shall be considered terminated when, at any frequency in the range 4000 - 7500 Mc/s, the performance of the valve falls outside any one of the limits specified, with the following exceptions:- Tests b, e, and d. Po shall be 10 mW. Test b, max. anode voltage shall be 300V.

The test and release sequence, and the procedure to be adopted in the event of failure in life testing, will be decided by the purchasing authority.

For production contract orders of less than 50 valves, the quantity of valves for life test shall be decided by the purchasing authority.

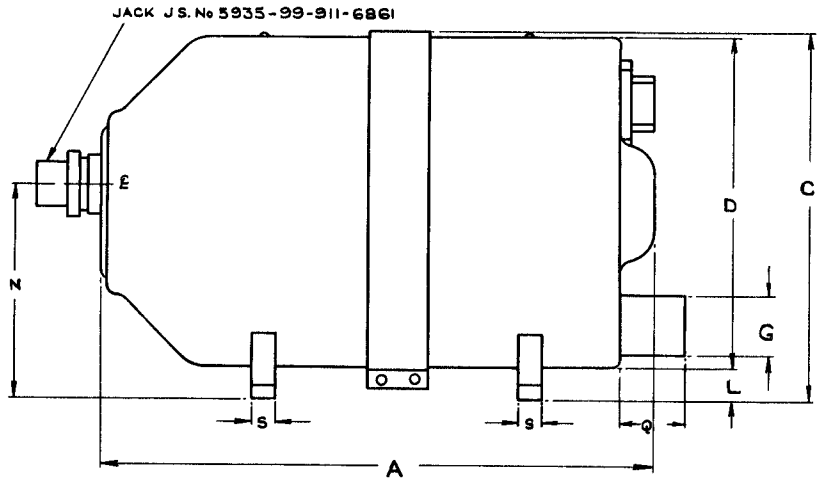

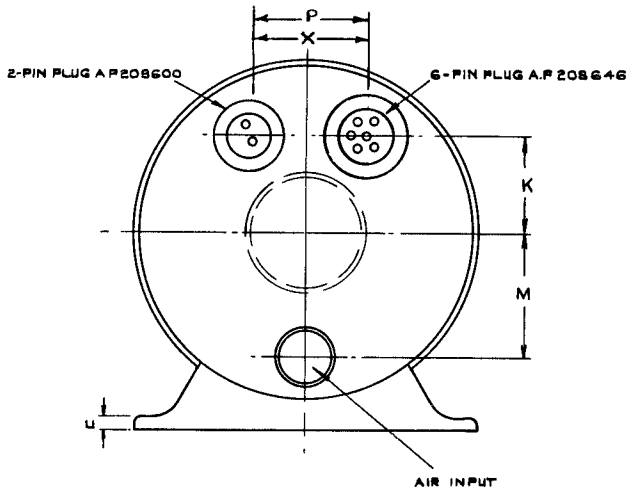

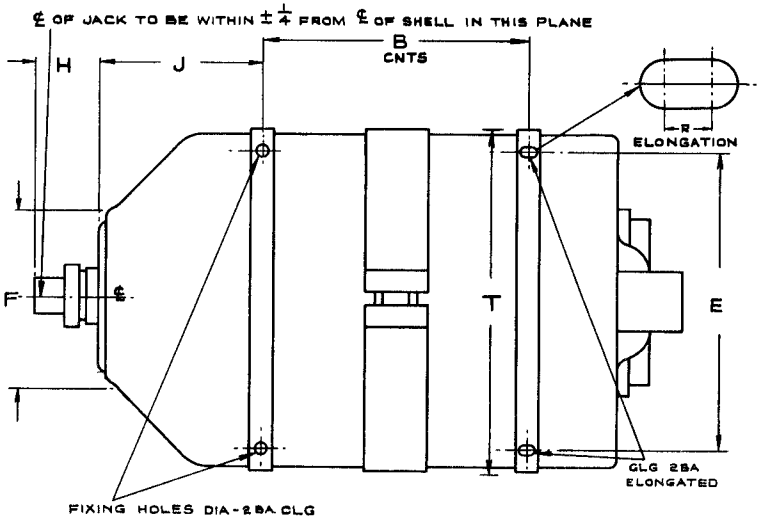

DIM	MILLIMETRES	INCHES	DIM	MILLIMETRES	INCHES
A	247·7 MAX.	$9\frac{3}{4}$ MAX	L	12·7 ± 1·6	$\frac{1}{2} \pm \frac{1}{16}$
B	106·4 ± 1·6	$4-\frac{3}{16} \pm \frac{1}{16}$	M	44·4 ± 1·6	$1\frac{3}{4} \pm \frac{1}{16}$
C	152·4 MAX	6 MAX	N	88·9 ± 6·4	$3\frac{1}{2} \pm \frac{1}{4}$
D	136·5 DIA. MAX.	$5\frac{3}{8}$ DIA. MAX.	P	42·8 ± 1·6	$1-\frac{11}{16} \pm \frac{1}{16}$
E	120·6 ± 0·13	$4\frac{3}{4} \pm 0{\cdot}005$	Q	23·8 ± 1·6	$\frac{15}{16} \pm \frac{1}{16}$
F	76·2 DIA. MAX	3 DIA. MAX	R	3·2 ± 0·13	$\frac{1}{8} \pm 0{\cdot}005$
G	25·4 DIA. ± 0·8	1 DIA ± 1/32	S	12·7 ± 0·8	$\frac{1}{2} \pm \frac{1}{32}$
H	22·2 APPROX.	$\frac{7}{8}$ APPROX	T	133·4 ± 0·8	$5\frac{1}{4} \pm \frac{1}{32}$
J	68·3 ± 1·6	$2-\frac{11}{16} \pm \frac{1}{16}$	u	6·4 ± 0	$\frac{1}{4} \pm 0$
K	41·3 ± 1·6	$1\frac{5}{8} \pm \frac{1}{16}$			

NOTE BASIC DIMENSIONS ARE INCHES.

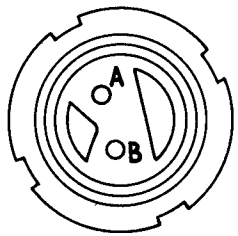

DETAIL OF 2-PIN PLUG
A.P. 208600.

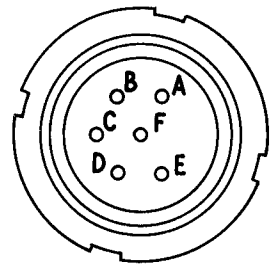

DETAIL OF 6-PIN PLUG
A.P. 208646.

CONNECTIONS

A.P. 208646. 6-PIN PLUG

PIN	ELECTRODE
A	HEATER
B	HEATER
C	CATHODE
D	1ST ANODE
E	LINE
F	GRID

A.P. 208600. 2-PIN PLUG.

A } MAGNET SUPPLY
B } PIN A TO BE EARTHED

DELAY-LINE VOLTAGE VERSUS FREQUENCY

ADMIRALTY SURFACE WEAPONS ESTABLISHMENT

VALVE ELECTRONIC CV6085

Specification AD/CV6085
Issue No. 2 dated November 1967
To be read in conjunction with K1001

SECURITY

Specification	Valve
Unclassified	Unclassified

TYPE OF VALVE: S-band travelling wave tube power amplifier with low modulation noise.

CATHODE: Indirectly heated

ENVELOPE: Metal capsule

PROTOTYPE: VX3290

MARKING

See K1001/4

BASE

B.S.448/B80

RATINGS
(All limiting values are absolute and non-simultaneous)

			Note
Heater Voltage	(V)	3.5	
Max. Heater Current	(A)	4.5	F
Max. Grid 1 Voltage	(kV)	2.5	A B
Max. Grid 1 Current	(mA)	1.5	A
Max. Helix Voltage	(kV)	2.7	A B
Max. Helix Current	(mA)	1.5	A
Max. Collector Voltage	(kV)	3	A B
Max. Collector Current	(mA)	20	A

CONNECTIONS

PIN	ELECTRODE	
1	Heater	h
2	N.C.	
3	Omitted	
4	Grid 1	g1
5	N.C.	
6	Helix	hel
7	Omitted	
8	Heater/Cathode	h,k
Case	Collector/Earth	Col

TYPICAL OPERATING CONDITIONS H

Heater Voltage	(V)	3.5	
Heater Current	(A)	3.5–4.5	
Grid 1 Voltage	(kV)	0.5–1.0	A B
Grid 1 Current	(mA)	0–1.0	A
Helix Voltage	(kV)	2.0–2.3	A B
Helix Current	(mA)	0–1.0	A
Collector Voltage	(kV)	2.0–2.5	A B
Collector Current	(mA)	14–16	A
Min. Working Saturated Power Output	(W)	0.5	G
Frequency Range	(GHz)	2.5–4.1	
Min. Gain at a Power Output of 0.5 watts	(dB)	20	
Max. Noise Factor	(dB)	30	
Min. Insertion Loss	(dB)	25	

DIMENSIONS

See drawing on page 6

MOUNTING POSITION

Any (but see Note D re cooling)

WEIGHT

Valve only: $2\frac{1}{8}$ lbs

Valve in solenoid mount assembly $4\frac{3}{4}$ lbs. (See Note J)

NOTES

A. These figures are for operation in the approved solenoid mount assembly (see Note 2 on Page 4) and adjusted for minimum helix current. The minimum solenoid current required to focus the electron beam is 4 Amps when valve and mount are aligned for minimum helix current by means of the adjusting screws on the solenoid. The max. solenoid current is 8 Amps and the solenoid operating voltage is 16 volts (approx.) Max. voltage 32 volts. All voltages are positive relative to the cathode. The collector is connected to the capsule which is normally earthed. The helix voltage should never exceed the collector voltage.

NOTES (CONT'D)

B. Adjusted in operation

C. The v.s.w.r. of the output and input couplers, measured when I col = 0 is not greater than 3:1. The valve must be operated in an r.f. circuit presenting a v.s.w.r. not greater than 5:1.

D. The valve is designed for operation without forced air cooling when mounted in a horizontal position at an ambient temperature of 20°C. Cooling is normally effected by thermal conduction through the base plate, which must be mounted on a suitable heat sink, and by thermal convection from the radiator.

When operated in other mounting positions and/or higher ambient temperatures, forced air cooling may be required. The solenoid must be so mounted and cooled that no external part of the valve capsule is at a temperature in excess of 130°C.

E. The performance of four tubes has been examined while operating and while subjected to the following tests:-

(i) Resonance Search, amplitude 0.004" frequency sweep 0-30 c/s for 2 minutes, test performed three times.

(ii) Vibration

Amplitude Inches	Frequency c/s	Time Mins.
0.030	0-11	2
0.020	11-16	1
0.010	16-21	1
0.004	21-30	2

Test performed three times

(iii) Fatigue

Vibrated for 25 minutes with an amplitude of 0.010" at a frequency of 20 c/s.

Test performed six times.

Results

There was no measurable effect on gain, noise output and r.f. power output.

F. The surge current shall not exceed 8 Amps.

G. Conditions as in test clause f on page 3.

H. A data sheet giving operating conditions is supplied with each valve.

J. The solenoid mount assembly is not supplied with the valve. An outline drawing showing the valve in the solenoid mount assembly is shown on Page 7.

K. The N.A.T.O. Stock number is 5960-99-037-2411.

TESTS

To be performed in addition to those applicable in K1001

Tests are to be performed in the specified order unless otherwise agreed with the Inspecting Authority.

Test Conditions - Unless Otherwise Specified

Vh (V)	V Col (kV)
3.5	Vhel+150V

Clause	Test	Test Conditions	AQL %	Insp. Level	Symbol	Limits Min.	Limits Max.	Units
a	Heater Current	No voltages except Vh		100%	Ih	3.5	4.5	A
b	Grid 1 Voltage	Vhel = 2.3 kV increase Vg1 from zero until I Col = 15 mA Note 2		100%	Vg1	0.5	1.0	kV
c	Grid 1 Current	Conditions as in test b. Note 2		100%	Ig1	-	1.0	mA
d	Helix Current	Conditions as in test b. Note 2		100%	Ihel	-	1.0	mA
e	Helix Voltage	Increase Vg1 from zero until I Col = 15 mA Apply a signal of r.f. power 5 ± 0.5 mW frequency 3.3 GHz ± 50 MHz to the input. Adjust Vhel to give max. r.f. power output. Note 2		100%	Vhel	2.0	2.3	kV
f	R.F. Power	Increase Vg1 from zero until I Col = 15 mA Vhel = value obtained in Test Clause (e)						
	(i) Output 1	Apply a signal of r.f. power 5 ± 0.5 mW to the input at frequencies 2.5 GHz ± 20 MHz 3.3 GHz ± 20 MHz 4.1 GHz ± 20 MHz Note 2.		100%		0.5 0.5 0.5		W W W
	(ii) Input	Increase the r.f. power input until the output falls beyond saturation to 500 mW Note 2.		100%		65.0		mW

CV6085

Clause	Test	Test Conditions	AQL %	Insp. Level	Sym-bol	Limit Min.	Limit Max.	Units
	R.F. Power(Contd.)							
f	(iii) Output 2	As in f (i) Increase the r.f. power input to 70 mW Note 2		100%		0.4	2.8	W
	(iv) Output 3	As f (i) at frequency intervals of 100 MHz ± 20 MHz over the band 2500 to 4100 MHz		Q.A.		0.5		W
g	High Level Noise Factor	Conditions as in test f(i). Frequency of r.f. signal = 3.3 GHz ± 20 MHz. Notes 2 and 3		100%		-	30	dB
h	Cold v.s.w.r.	No voltages. Measured over the frequency range 2.5 to 4.1 GHz		100%		-		
		(a) Input				-	3:1	Ratio
		(b) Output				-	3:1	Ratio
j	Hot v.s.w.r.	D.C. conditions as in f(i). Measured over the frequency range 2.5 to 4.1 GHz		100%				
		(a) Input					6.5:1	Ratio
		(b) Output Note 2					6.5:1	Ratio
k	Life	Note 4		Note 4		Note 4		

NOTES

1. The surge current shall not exceed 8 Amps.

2. Measured with the valve operating in a solenoid mount assembly which has been approved by comparison with the reference standard held by the Qualification Approval Authority. During adjustment and test the helix current must not exceed 1.5 mA.

3. The noise factor is measured by comparing the noise with that from a standard noise source, the detector being a broad-band crystal and receiver having a pass-band 5-50 MHz.

NOTES Cont'd.

4. (a) The sample size shall be as follows:-

Lot Size	Sample Size
1-25	1
26-50	2
51-100	3
100 or greater	2%

The manufacturer may test additional samples at his discretion.

(b) For the first lot of any production order, deliveries shall be held until satisfactory completion of a minimum of 500 hours life.

Where previous life test data is available deliveries may be released at the discretion of the Inspection Authority.

Thereafter, where previous results have proved satisfactory, shipment of valves may be permitted without awaiting the results of current tests.

(c) The criterion of acceptance shall be that the average life of the sample shall be at least 1,000 hours.

(d) In the event of a failure, the Qualification Approval Authority shall be informed.

(e) The end of life is reached when, after adjustment of the voltages within the specified limits, the valve fails to meet the Specification except that the levels of r.f. power output, noise and gain may deteriorate by 3 dB.

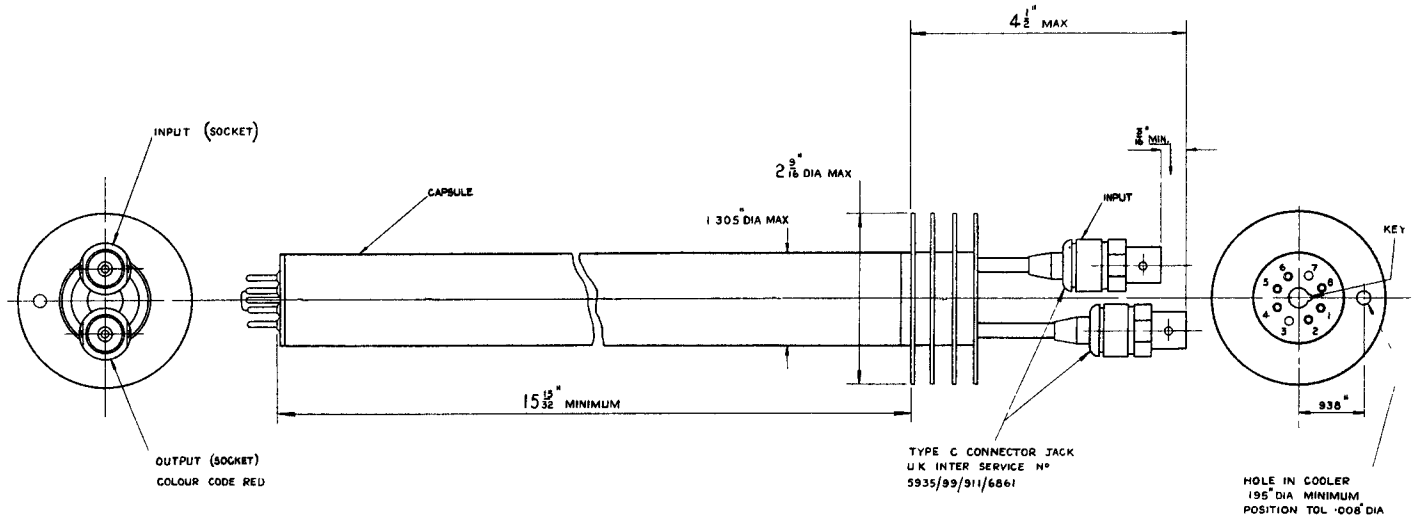

TOLERANCE
DECIMAL ± ·005
FRACTION ± 1/64

DIMENSIONAL DRAWING OF VALVE

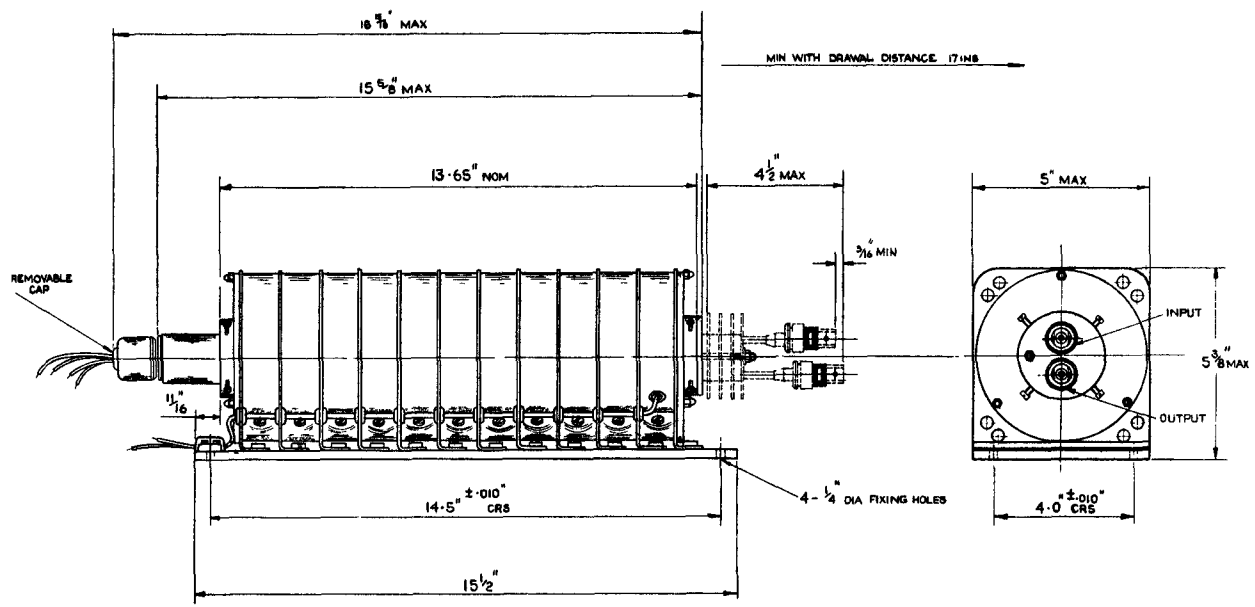

OUTLINE DRAWING OF VALVE IN SOLENOID MOUNT ASSEMBLY

(FOR THE INFORMATION OF EQUIPMENT DESIGNERS)

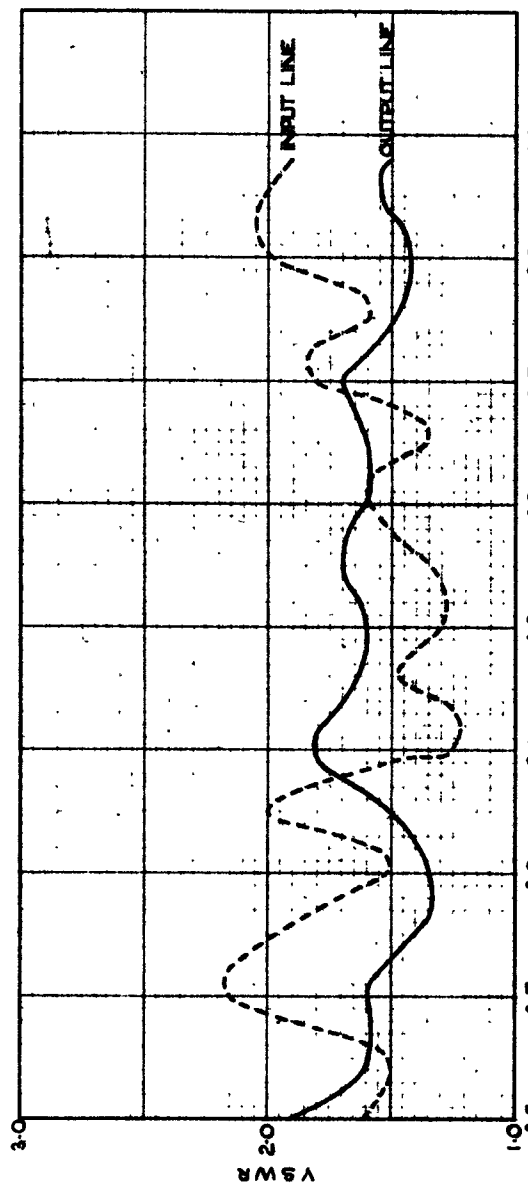

VARIATION OF MATCH WITH FREQUENCY
(MEASURED COLD)

DATA SHEET CV 6085

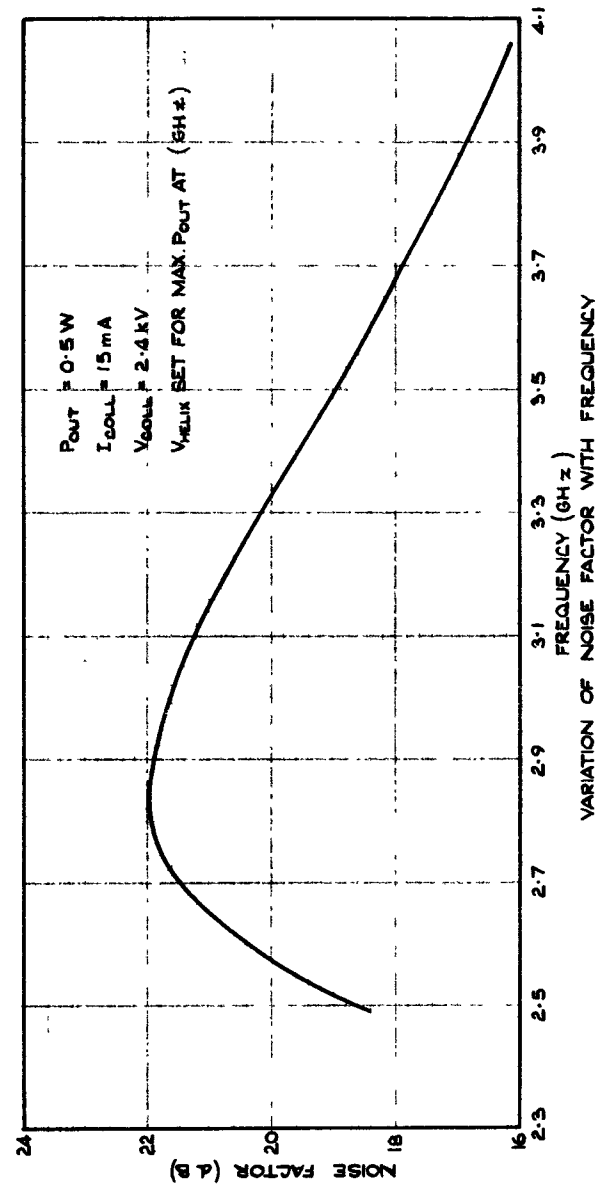

VARIATION OF NOISE FACTOR WITH FREQUENCY

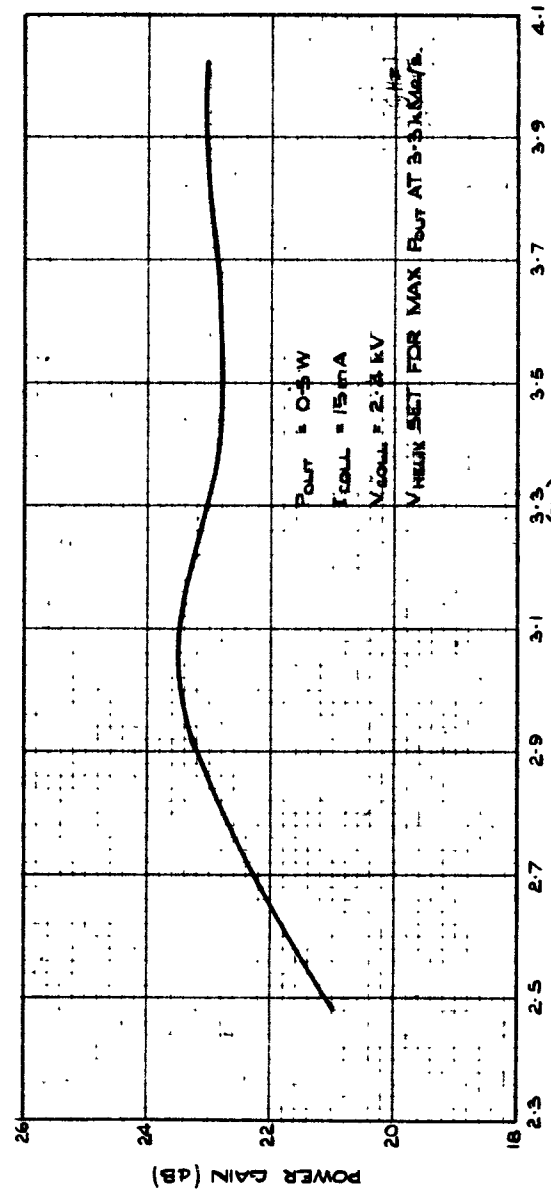

VARIATION OF POWER GAIN WITH FREQUENCY

DATA SHEET CV6085

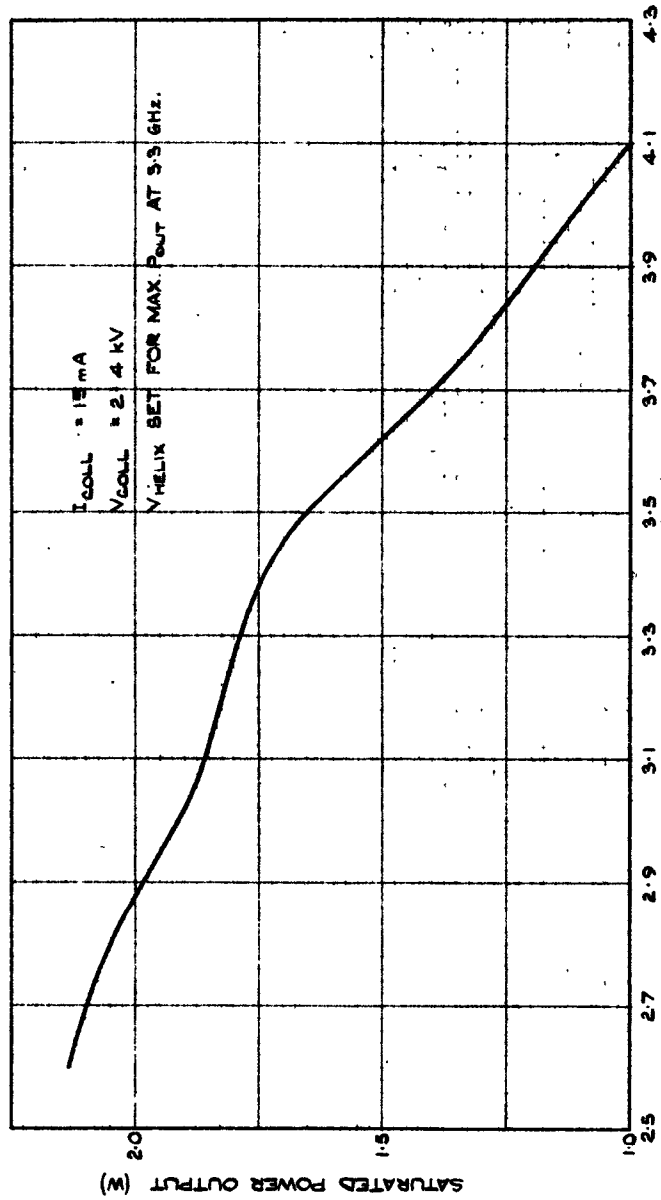

VARIATION OF SATURATED POWER WITH FREQUENCY

AL.1)

~~THIS VALVE MAY BE RADIO ACTIVE~~ (THIS VALVE MAY BE RADIOACTIVE TO CLASS 1. (SEE K1001 APPENDIX XX) (AL.8)

MINISTRY OF AVIATION - DLRD/RRE

VALVE ELECTRONIC **CV 6086**

Specification MOA/CV 6086 Issue 1 dated 16th September, 1961 To be read in conjunction with K1001	SECURITY Specification: UNCLASSIFIED Valve: UNCLASSIFIED

TYPE OF VALVE - Pre TR. Tube
ENVELOPE - Silica
PROTOTYPE - VX9204

MARKING

K1001 4.1.1 except d, and g.

RATING

		Note	
Operating Frequency Range	(kMc/s)	2.5-12	A
Max. Peak Power	(kW)	250	B.D
Max. Mean Power	(W)	250	B
Min. Peak Power	(kW)	2-25	C

DIMENSIONS

See drawing on Page 4.

MOUNTING POSITION

Any. (Note E)

NOTES

A. The tube is intended to be inserted across a suitable waveguide mount at any frequency in the range 2.5-12 k Mc/s. The bandwidth and the matching are determined by the mount.

B. For a single tube operating across both waveguides of a balanced duplexer the power quoted is that value incident on the balanced duplexer.

C. Minimum breakdown power depends upon mount design. When the tube is mounted across W.G.16 breakdown occurs at peak incident power levels above 10 k.W., the ionisation time being about 0.02 microsecond. At S-band, mounted across a resonant iris having a loaded Q of 2, breakdown occurs at less than 2 k.W. incident power when a short circuit is placed $\lambda/4$ behind the tube.

D. In all high power applications adequate choking is required where the tube passes through the waveguide walls. If the power incident on any part of the tube exceeds 125 k.W. peak, provision must be made for the tube to be in contact with the transmitter face of the mount.

E. The hole through which the tube is mounted should be 0.3576 inches $\pm$ 0.0005 DIA.

TYPICAL OPERATION

Primary Switch at 9 - 10 kMc/s Balanced Duplexer

A single tube mounted across W.G.16 gives a v.s.w.r. of less than 1.1 over a band in excess of 1,000 Mc/s with an insertion loss of less than 0.1 dB. For a line power of 250 k.W. peak leakage to the receiver is about 200 ergs spike and 200 W peak flat. Life is in excess of 3,000 hours and recovery time less than 8 microseconds.

Power Limiter at S Band

A single tube may be used as a power limiter in a waveguide iris and with a Q of 2 will breakdown at about 1 k.W. peak line power with a short circuit $\lambda/4$ behind the tube.

J. S. Catalogue No. 5960-99-037-2432

AL.1)

~~THIS VALVE MAY BE RADIO ACTIVE~~ (THIS VALVE MAY BE RADIOACTIVE TO CHASSIS. (SEE K1001 APPENDIX XX) (AL 8)

MINISTRY OF AVIATION - DLRD/RRE

VALVE ELECTRONIC **CV 6086**

Specification MOA/CV 6086 Issue 1 dated 16th September, 1961 To be read in conjunction with K1001	SECURITY Specification: UNCLASSIFIED Valve: UNCLASSIFIED

TYPE OF VALVE - Pre TR. Tube
ENVELOPE - Silica
PROTOTYPE - VX9204

MARKING

K1001 4.1.1 except d, and g.

RATING

		Note	
Operating Frequency Range	(kMc/s)	2.5-12	A
Max. Peak Power	(kW)	250	B.D
Max. Mean Power	(W)	250	B
Min. Peak Power	(kW)	2-25	C

DIMENSIONS

See drawing on Page 4.

MOUNTING POSITION

Any. (Note E)

NOTES

A. The tube is intended to be inserted across a suitable waveguide mount at any frequency in the range 2.5-12 k Mc/s. The bandwidth and the matching are determined by the mount.

B. For a single tube operating across both waveguides of a balanced duplexer the power quoted is that value incident on the balanced duplexer.

C. Minimum breakdown power depends upon mount design. When the tube is mounted across W.G.16 breakdown occurs at peak incident power levels above 10 k.W., the ionisation time being about 0.02 microsecond. At S-band, mounted across a resonant iris having a loaded Q of 2, breakdown occurs at less than 2 k.W. incident power when a short circuit is placed $\lambda/4$ behind the tube.

D. In all high power applications adequate choking is required where the tube passes through the waveguide walls. If the power incident on any part of the tube exceeds 125 k.W. peak, provision must be made for the tube to be in contact with the transmitter face of the mount.

E. The hole through which the tube is mounted should be 0.3576 inches $\pm$ 0.0005 DIA.

TYPICAL OPERATION

Primary Switch at 9 - 10 kMc/s Balanced Duplexer

A single tube mounted across W.G.16 gives a v.s.w.r. of less than 1.1 over a band in excess of 1,000 Mc/s with an insertion loss of less than 0.1 dB. For a line power of 250 k.W. peak leakage to the receiver is about 200 ergs spike and 200 W peak flat. Life is in excess of 3,000 hours and recovery time less than 8 microseconds.

Power Limiter at S Band

A single tube may be used as a power limiter in a waveguide iris and with a Q of 2 will breakdown at about 1 k.W. peak line power with a short circuit $\lambda/4$ behind the tube.

J. S. Catalogue No. 5960-99-037-2432

TESTS Cont'd

K1001	TEST	TEST CONDITIONS	AQL %	Insp. Level	Sym-bol	LIMITS Min.	LIMITS Max.	UNITS
	GROUP F omitted							
	GROUP G Re-test after 28 days holding period.	Note 5						
	Recovery Time	As in Group A	1	100%		2	8	usecs
	Firing Power	As in Group A	1	100%		-	20	k.W.

NOTES

1. The power measured or quoted shall be that which is incident on the balanced duplexer.

2. The valve shall be moved up and down in the duplexer through all portions for which the accurately dimensioned section of the valve (active length, see p.4) is completely through both waveguides.

3. The sample size used for the purpose of the tests contained in Group E shall comprise of 10% of the lot size taken to the nearest whole number above the 10% value. Where the production rate is less than 30 per calendar month, a lot shall be considered as comprising the total production of that month.

   The criterion of acceptance shall be that there shall not be more than one failure in any ten consecutive samples tested. During the initial period of any contract following a non-production period exceeding six months, valves may be despatched without awaiting the cumulation of the ten samples provided that the results of tests made do not preclude acceptance under the criterion. Where rejection is incurred production shall cease and the approval authority informed.

   The manufacturer may, at his discretion, test additional valves or apply more than one test to each sample.

   At least half of the samples taken for Group E shall be subjected to the mechanical tests.

4. The valve shall be vibrated in the horizontal plane only.

5. This test excludes any life test requirement.

CV 6086

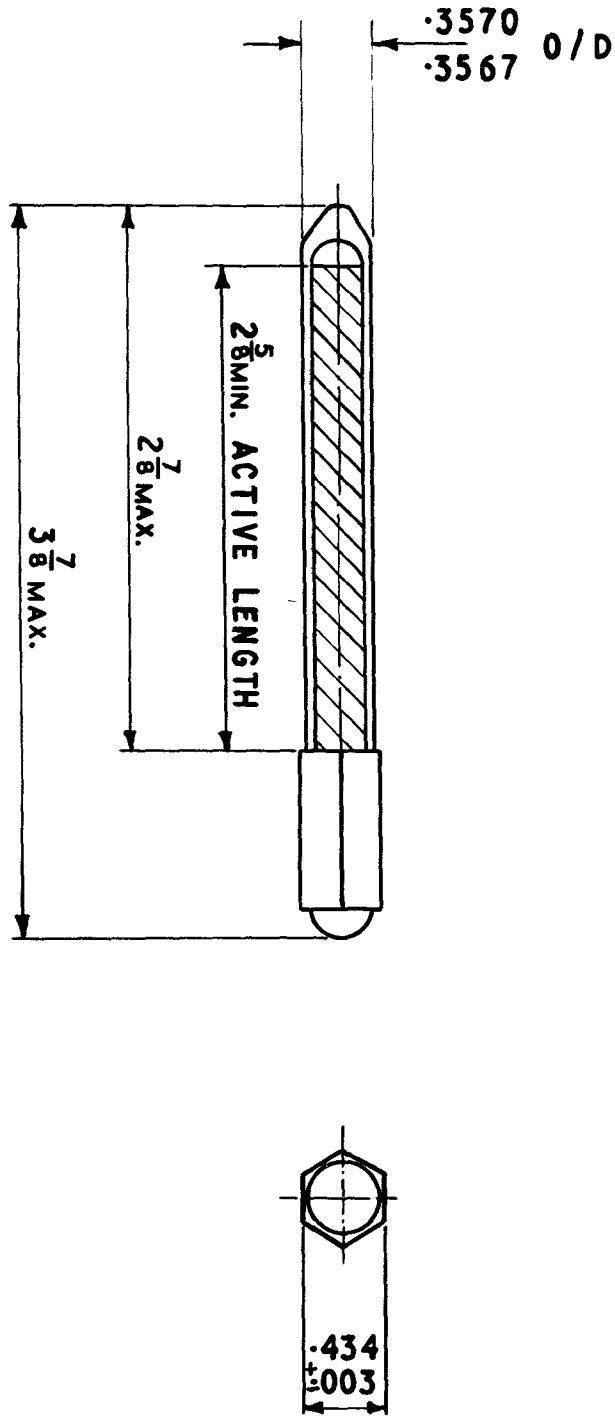

DIMENSIONS IN INCHES.

THIS VALVE MAY BE RADIOACTIVE TO CLASS 1 SEE K1001 APPENDIX XX

MINISTRY OF AVIATION - DLRD/RRE

VALVE ELECTRONIC **CV6089**

Specification MOA/CV6089 Issue 1B dated 26th February 1963 To be read in conjunction with K1001 except where otherwise stated	SECURITY	
	Specification	Valve
	Unclassified	Unclassified

→ indicates a change

TYPE OF VALVE : Externally excited microwave pulsed attenuator

ENVELOPE : Silica

PROTOTYPE : VX9195

RATINGS and CHARACTERISTICS
(Not for Inspection Purposes)
All limiting values are absolute

			Note
Operating frequency range	Mc/s	2500 to 4000	A
Maximum Microwave incident power	(W)	200	B
Minimum Excitation pulse width	(μs)	2	C
Excitation Frequency	(Mc/s)	50	D
Peak Excitation power	(W)	100	

MARKING

See K1001/4
CV number and serial number on silica envelope. A red spot indicating correct orientation to be marked on seal off tip

EXCITATION

By R.F. applied to an external metal sleeve

DIMENSIONS

See drawing on page 4

MOUNTING POSITION

ANY

NOTES

A. The tube is intended to be mounted across a suitable waveguide iris dimensioned, so that the combination resonates at the desired frequency. Peak attenuation and bandwidth are determined by the Q value of the structure.

B. Except where the peak microwave power is spike leakage of less than 0.02 microseconds duration the tube should be preceded by a suitable power limiter for incident microwave peak power in excess of 200 watts.

C. The peak attenuation is developed coincident with the trailing edge of the R.F. excitation pulse. The excitation pulse should not exceed 5 μs duration.

D. The recovery time and attenuation is dependert upon the operating electron density in the tube which reaches its limited value in about 2 microseconds. After ionisation the limit is determined primarily by the impedance of the excitation source.

E. TYPICAL OPERATING CONDITIONS

The tubes may be used in a three or four element filter network designed for a 10% passband to a V.S.W.R. of 0.85. Under these conditions a minimum peak attenuation of 45 dB is obtained with a maximum recovery time of 30 microseconds to 3 dB. When operating with incident microwave power in excess of 200 watts peak the first element of the filter network should include a power limiter tube.

F. JOINT SERVICE CATALOGUE NUMBER 5960-99-037-2435

To be performed in addition to those applicable in K1001

TEST CONDITIONS: Unless otherwise specified

Excitation pulse (tp) /us 3 ± 10% | Duty Cycle (Du) of excitation pulse 0.003 ± 10% | Test Mount Note 1 | Test Circuit Note 2

K1001	TEST	TEST CONDITIONS	AQL %	Insp. Level	Sym-bol	Limits Min.	Limits Max.	Units
	GROUP A							
	v.s.w.r.	Note 1		100	-	0.95	-	Ratio
	Recovery Time (1) (to 3dB)	Notes 1 and 2		100	t	-	30	/us
	Peak Attenuation	Notes 1 and 2		100	-	22	-	dB
	Recovery Time (2)	Du = .00075 ± 10%			t_j	-	2	/us
	Attenuation Rise Time	Du = .00075 ± 10% Notes 1, 2 and 3			t_r	-	3	/us
	GROUPS B, C AND D Omitted							
	GROUP E	Note 4						
	Glass strain	No voltages		10%				
11.3	Fatigue	No voltages Note 5 Frequency, any within range 40-200 c/s. Min. peak acceleration = 5g Duration = 96 hours						
11.4	Shock	No voltages Hammer angle = 30° Applied along valve axis only						
	Temperature cycling	No voltages Three cycles between -40°C and 100°C						
	Post Fatigue Shock and Temperature Cycling Tests							
	Recovery time Peak Attenuation	Test and limits as in Group A						
	GROUP F Omitted							
	GROUP G	Note 6						
	Re-test after 28 days holding period							
	Recovery time	Test and limits	1	100%				
	Peak Attenuation	As in Group A	1	100%				

CV 6089

NOTES

1. The tube shall be tested in a mount having a loaded Q of 3.4 ± 5% at a frequency of 3650 Mc/s ± 10%: The mount shall be resonant at the test frequency, the V.S.W.R. being not less than 0.95. The mount shall be provided with a suitable monitor of excitation current which will be used in conjunction with standard tubes to check the output of the excitation oscillator before tests. A drawing of a suitable mount and current monitor circuit is shown on Page 5. A circuit of a suitable excitation oscillator for this mount is shown on Page. 6.

2. The recovery time shall be measured with reference to the trailing edge of the R.F. excitation pulse. The time in microseconds shall be taken as the longest indicated by the pulse jitter. The peak attenuation shall be measured within the period and up to 1 µsec after the trailing edge of the excitation pulse. A recovery time curve for an average tube is shown on page 4.

3. The attenuation curve for the tube under test shall be displayed on a suitable C.R.O. and shall be observed for a period of not less than 20 seconds. ←

   The rise time shall be defined for the purpose of this specification as being the time delay measured from the trailing edge of the excitation pulse to the moment when the attenuation characteristic has reached a value which is ± 0.2dB from the maximum value obtained. At no time during the observation period shall the limit be exceeded. ←

   This test shall be repeated following a notation of the valve, in its mount, through an angle of 90°. ←

4. The sample size used for the purpose of the tests contained in Group E shall comprise of 10% of the lot size taken to the nearest whole number above the 10% value. Where the production rate is less than 30 per calendar month, a lot shall be considered as comprising the total production of that month.

   The criteria for acceptance shall be that not more than one failure shall occur in any ten consecutive samples tested. At the start of a contract following a non-production period exceeding six months, valves may be despatched without waiting for the accumulation of the ten samples, provided that the results of the tests made do not preclude acceptance under the criterion. Where rejection is incurred shipment shall cease and the Approval Authorities informed. ←

   The manufacturer may, at his discretion, test additional valves or apply more than one test to each sample. Of the samples taken for the Group E tests, at least half shall be subjected to either the Fatigue or Shock test; taken in equal proportion.

5. The Valve shall be vibrated in the horizontal plane only.

6. This test excludes any life test equipment.

OUTLINE DRAWING

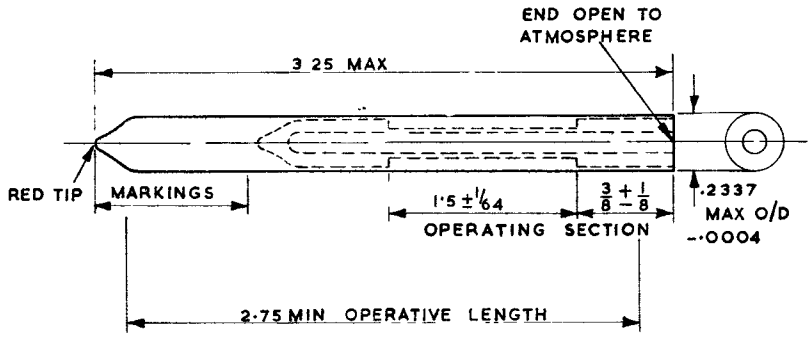

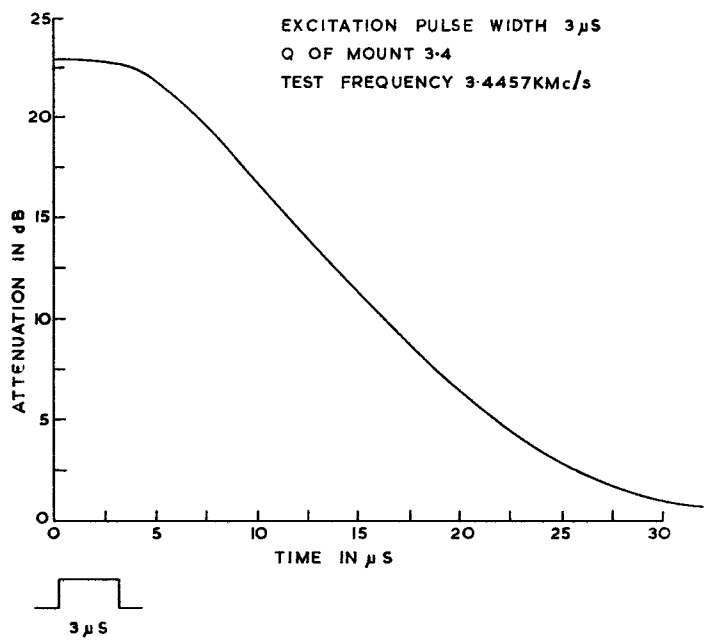

RECOVERY TIME CURVE
FOR AVERAGE CV6089

DIMENSIONS IN INCHES

CV 6089

CV 6089 TEST MOUNT

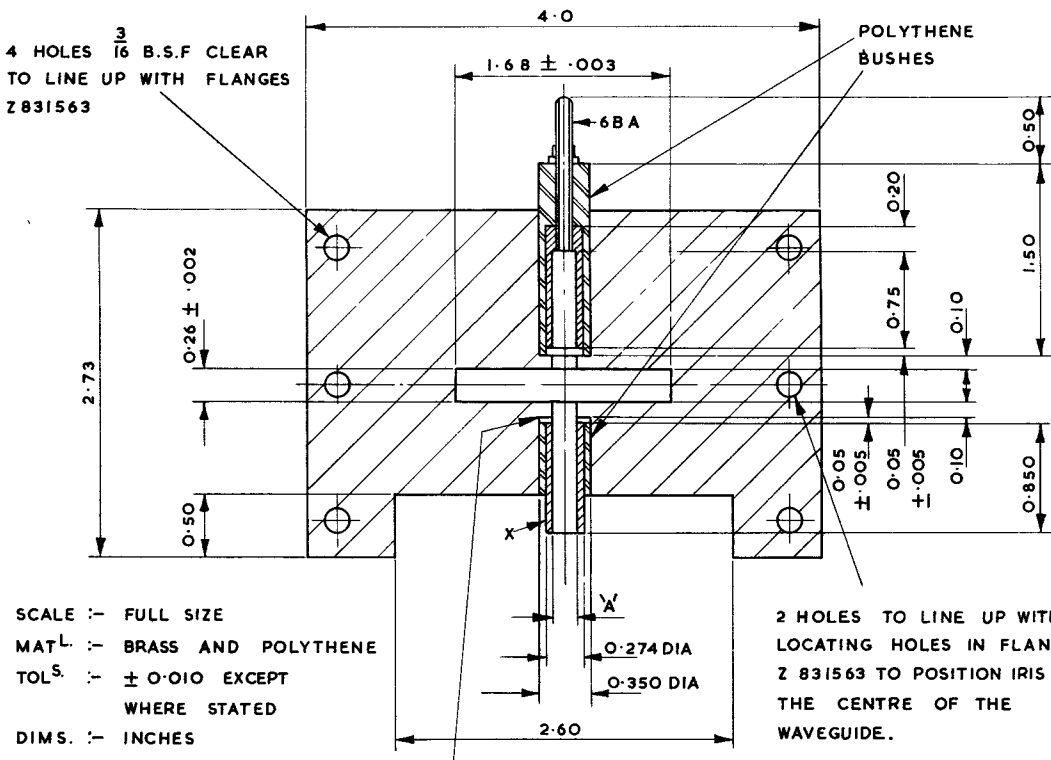

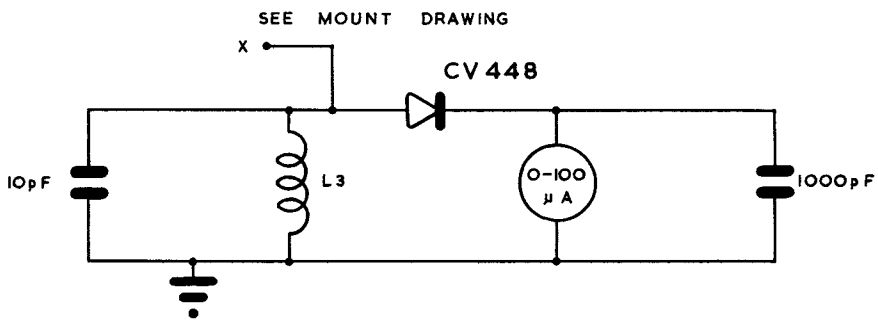

MONITOR CIRCUIT

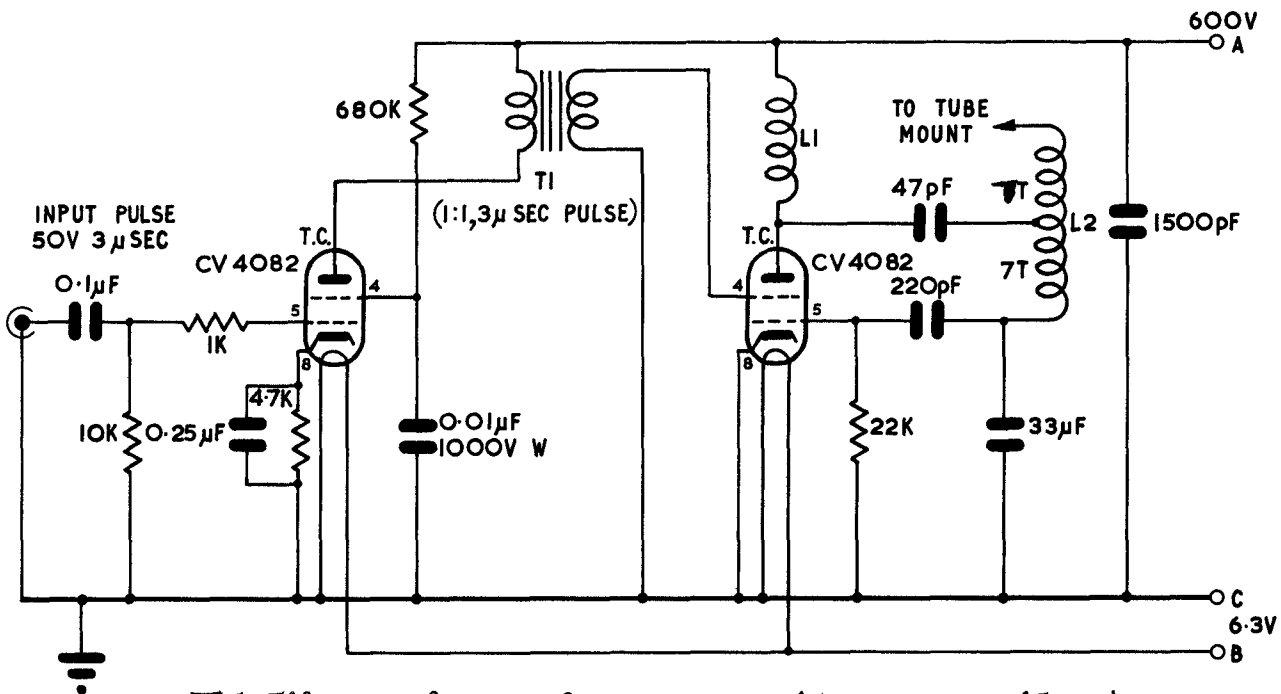

THE TAP ON L2 SHALL GIVE OPTIMUM MATCH TO THE TUBE UNDER TEST.

EXCITATION OSCILLATOR

CV6090

VALVE ELECTRONIC

ADMIRALTY SURFACE WEAPONS ESTABLISHMENT

Specification AD/CV6090 Issue 1 Dated 4. 8. 61. To be read in conjunction with K1001.	SECURITY Specification: Unclassified Valve: Unclassified

TYPE OF VALVE : Travelling Wave Tube

CATHODE: Indirectly heated.

ENVELOPE: Glass.

PROTOTYPE: VX7156.

MARKING

See K1001/4

BASE

SPECIAL. Pin spacing as for B9A.

See drawing on Page 6.

RATING

(All limiting values are absolute)

			Note
Heater Voltage	(V)	5.0	
Heater Current	(A)	0.55	
Min. Grid 1 Voltage	(V)	- 50	D
Max. Grid 2 Voltage	(V)	400	D
Max. Grid 3 Voltage	(V)	400	D
Max. Grid 4 Voltage	(V)	400	D
Max. Helix Voltage	(V)	600	D
Max. Collector Voltage	(V)	800	D
Max. Collector Current	(μA)	600	
Max. Helix Current	(μA)	50	

CONNECTIONS

Pin	Electrode	
1	Heater, Cathode	h, k.
2	Grid 3	g3
3	Grid 4	g4
4	I.C.	
5	Heater	h
6	Grid 1	g1
7	Grid 2	g2
8	I.C.	
9	Helix	hel
End Cap.	Collector	col.

Typical Operating Conditions

			Note
Grid 1 Voltage (Negative)	(V)	0 to 10	D
Grid 2 Voltage	(V)	12 to 40	A,D
Grid 3 Voltage	(V)	50 to 150	A,B,D
Grid 4 Voltage	(V)	150 to 300	A,B,D
Helix Voltage	(V)	350 to 450	B,D
Collector Voltage	(V)	550 to 650	D
Helix Current	(μA)	0 to 5	
Collector Current	(μA)	400	
Frequency Range	(Mc/s)	2500 to 4100	
Max. Noise Factor	(dB)	10	
Min. Small Signal Gain	(dB)	38	
Min. Working Saturated Power Output	(mW)	3	E
Focusing Field Strength (oersted)		550	C

DIMENSIONS

See drawing on page 6.

MOUNTING POSITION

Any.

But see Note F on page 2.

OPERATING TEMPERATURE

See Note G on page 2.

WEIGHT

Valve only 2 ozs.

Solenoid only 23 lbs.

See Note J on page 2.

NOTES

See page 2.

NOTES

A. These electrodes draw very low current (less than 25 μA).

B. Voltages adjusted to optimum value at 3,300 Mc/s.

C. When operated in the approved circuit the current in the field coils giving this field strength is 9 amps.

D. All voltages are relative to the cathode.
The collector is normally earthed.

E. The saturated power obtained at synchronous helix potential.

F. The valve will operate in any position with suitable fixing arrangements on the mount.

G. For operation at a voltage of 24V, forced air cooling will be necessary in an ambient temperature of more than 30°C in order to keep the external temperature of the larger diameter coil below 120°C. Where a higher voltage power supply is available the coil temperature may be allowed to reach 140°C.

H. A set of operating data (including setting-up procedure) is supplied with each valve.

J. The solenoid is not supplied with the valve.

K. The Joint Services Catalogue Number is 5960-99-037-2440.

CV6090

TESTS

To be performed in addition to those applicable in K1001.

Tests are to be performed in the specified order unless otherwise agreed with Inspecting Authority.

Test conditions - unless otherwise stated:-

V_h (V)	V_{g1} (V)	V_{g3} (V)	V_{g4} (V)	$V_{hel.}$ (V)	$V_{col.}$ (V)	$I_{col.}$ (μA)	Mean Field (oersteds)
5.0	$-2\frac{1}{2}$	100	200	400	600	400	550

	Test	Test Conditions	AQL %	Insp. Level	Symbol	Limits Min.	Limits Max.	Units
a	Heater Current	No voltages except V_h No magnetic field. Note 1.		100%	I_h	0.45	0.65	A
b	Helix current	Notes 2 and 3.		100%	I_{hel}	0	5	μA
c	Helix voltage	$V_{col.} = V_{hel} + 200V$ Notes 2 and 4.		100%	V_{hel}	350	450	V
d	Spurious oscillations.	V_{g2} = Adjust V_{hel} = Value obtained in test c. $V_{col.} = V_{hel} + 200V$ Notes 2 and 5.		100%		No oscillations should be detected.		
e	Optimum V_{g1} do V_{g2} do V_{g3} do V_{g4} for minimum noise factor.	V_{hel} = value obtained in test c. $V_{col} = V_{hel} + 200V$ Notes 2 and 6.		100% 100% 100% 100%	V_{g1} V_{g2} V_{g3} V_{g4}	0 12 50 150	- 10 40 150 300	V V V V
f	Noise Factor	V_{g2} = value obtained in test e. V_{g3} = value obtained in test e. V_{g4} = value obtained in test e. V_{hel} = value obtained in test c. $V_{col.} = V_{hel} + 200V$ Notes 2, 7 and 10.		100%		-	10.0	dB
g	(i) Small Signal Gain. (ii) Gain variation (i.e. the difference between any two readings in test g(i).	V_{g2} = value obtained in test e. V_{hel} = value obtained in test c. $V_{col.} = V_{hel} + 200V$ Notes 2, 8 and 10.		100% 100%		38 -	50 6	dB dB

TESTS (Contd.)

To be performed in addition to those applicable in K1001.

Tests are to be performed in the specified order unless otherwise agreed with the Inspecting Authority.

Test conditions - unless otherwise stated:-

V_h (V)	V_{g1} (V)	V_{g3} (V)	V_{g4} (V)	$V_{hel.}$ (V)	$V_{col.}$ (V)	$I_{col.}$ (mA)	Mean Field (oersteds)
5.0	$-2\frac{1}{2}$	100	200	400	600	400	550

	Test	Test Conditions	AQL %	Insp. Level	Sym-bol.	Limits Min.	Limits Max.	Units
h	Working Saturated Power Output	V_{g2} = value obtained in test e. V_{g3} = value obtained in test e. V_{g4} = value obtained in test e. V_{hel} = value obtained in test c. V_{col} = V_{hel} + 200V Notes 2, 9 and 10.		100%		3	12	mW
j	Cold Attenuation	Measured at a frequency of 3300 Mc/s No voltages. No magnetic field. Notes 2 and 10.		100%		75	-	dB
k	Life Test (end of life)	V_{g1}, V_{g3} and V_{g4} = values obtained in test e. V_{g2} = not more than 15V above value obtained in test e. Notes 2, 6, 7 and 11.		See Note 11.		500	-	hours

NOTES

1. Heater current shall be read at least three minutes after switching on.
2. These tests shall be performed in a solenoid which has been approved by the Type Approving Authority by comparison with the reference standard held by that Authority.
3. Optimise deflector coils for minimum helix current at the same time adjusting grid 2 voltage to maintain 400 μA collector current.
4. Adjust helix voltage for maximum low level gain at 3300 Mc/s.
5. The collector current is increased to 600 μA by adjusting grid 2 and the helix voltage is swept with a 50 c/s voltage of r.m.s. value 50V, about the value obtained in test "d". The r.f. output against helix voltage characteristic is examined on an oscilloscope with an r.f. input of less than - 50 dBm. The characteristic should be a smooth curve with a maximum at the optimum helix voltage, and should decrease and increase as the input level is decreased and increased. Any oscillation present will give an output which does not decrease with input level or discontinuities in the otherwise smooth trace.
6. The voltages on grids 1, 3 and 4 shall be adjusted repeatedly for minimum noise at 3300 Mc/s. The voltage on grid 2 shall be varied to maintain 400 μA collector current. The input to the tube shall be terminated in a load of v.s.w.r. $< 1.1 : 1$.
7. The noise factor shall be measured at 2500, 3300 and 4100 Mc/s.

8. Small signal gain shall be measured at 2500, 2700, 3300, 3600, 3900 and 4100 Mc/s. with an input not greater than - 50 dBm in each case.

9. The working saturated power output shall be measured at 2500, 3300 and 4100 Mc/s.

10. At Type Approval, measurements shall be taken at intervals of 100 Mc/s over the band 2500 to 4100 Mc/s.

11. Life test shall be performed during Type Approval on two valves selected at random. If both valves pass the test the batch shall be accepted. If one valve fails another one from the same batch shall be selected at random and tested. If that or the remaining valve fails the batch shall be rejected.

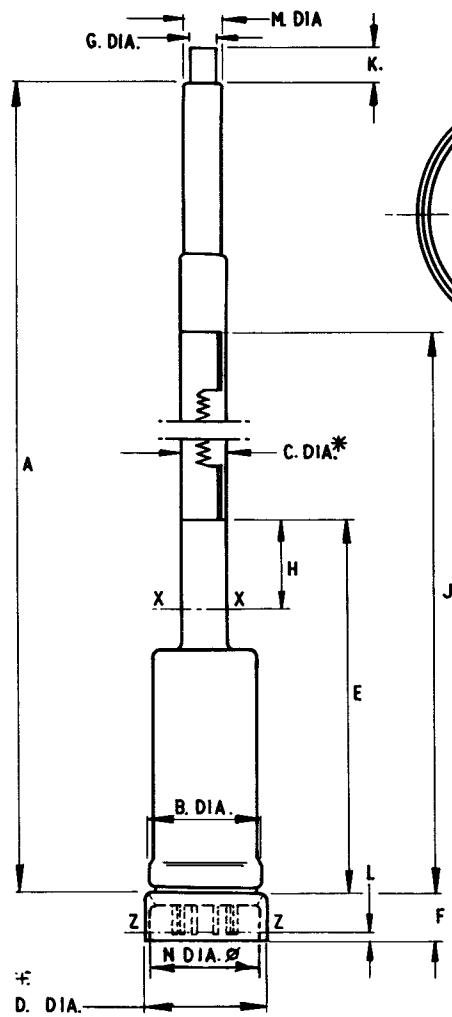

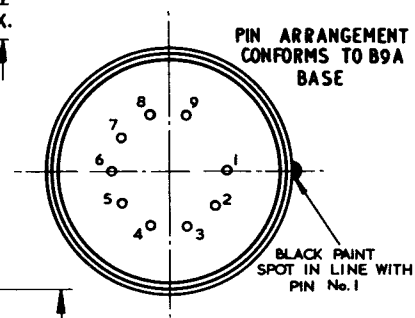

* DENOTES:-DIM.C. APPLIES DOWN TO LINE X-X.

≠ DENOTES:- THIS DIA APPLIES ABOVE LINE Z-Z

NOTE:- CHOKE SPIGOTS & PIN Nº1 WILL NOT DEVIATE BY MORE THAN 15° IN EITHER DIRECTION FROM THE COMMON CENTRE LINE.

Ø INT. DIA. OF BASE SHELL CONCENTRIC WITH P.C.D. OF PINS.

BASING

1. HEATER CATHODE
2. GRID 3
3. GRID 4
4. I.C.
5. HEATER
6. GRID 1
7. GRID 2
8. I.C.
9. HELIX

NOTE:- BASIC FIGURES ARE INCHES

DIMENSIONAL DRAWING

DIM.	MILLIMETRES	INCHES
A	366·90±0·89	14·445±0·035
B	23·24 MAX.	0·915 MAX
C	9·27 MAX.	0·365 MAX.
D	25·30 ± 0·18	0·996 ±0·007
E	76·83 ± 0·38	3·025 ±0·015
F	10·16 ± 0·63	0·400 ±0·025

DIM.	MILLIMETRES	INCHES
G	5·99 ± 0·18	0·236 ± 0·007
H	19·1 MIN.	3/4 MIN.
J	315·60±0·63	12·425 ± 0·025
K	7·62 ± 0·76	0·300 ± 0·030
L	1·59 MAX	0·063 MAX.
M	7·62 ± 0·18	0·300 ± 0·004
N	22·22 MIN	0·875 MIN.

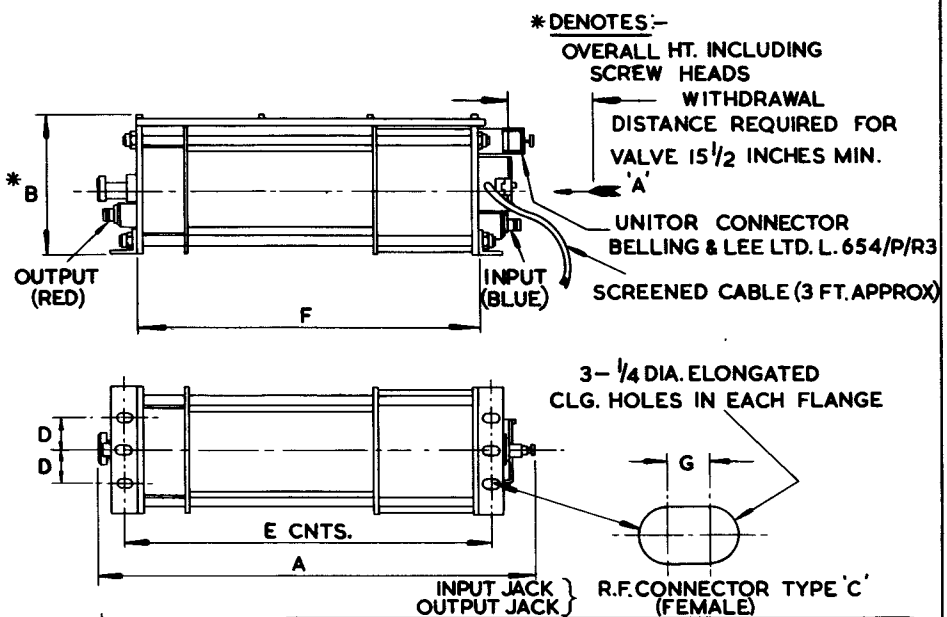

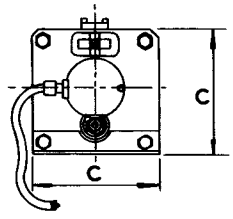

VIEW IN DIRECTION OF ARROW 'A'

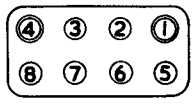

UNITOR CONNECTIONS

CONNECTIONS UNITOR		DIMENSIONS		
		DIM	INCHES	MILLIMETRES
1	FIELD CURRENT	A	19 MAX.	482.6 MAX.
2	FIELD CENTRE TAP.	B	5 7/8 MAX.	149.2 MAX.
3	COLLECTOR	C	5 1/4 ± 1/16	133.4 ± 1.6
4	FIELD CURRENT	D	1 3/8 ± 1/32	34.9 ± 0.8
5	ONE PAIR OF DEFLECTOR COILS	E	15 3/8 ± 1/8	390.5 ± 3.2
6		F	14 1/4 ± 1/8	362.0 ± 3.2
7	ONE PAIR OF DEFLECTOR COILS	G	1/8	3.2
8				
SCREENED CABLE				
hk	YELLOW			
g_3	GREY			
g_4	WHITE			
h	BROWN	NET. WT. APPROX.	LBS	23
g_1	GREEN		Kgs	10.4
g_2	BLUE	NOTE:- BASIC DIMENSIONS ARE INCHES		
hel	ORANGE			

OUTLINE DRAWING OF TYPICAL SOLENOID.

(FOR THE INFORMATION OF EQUIPMENT DESIGNERS.)

DATA SHEET

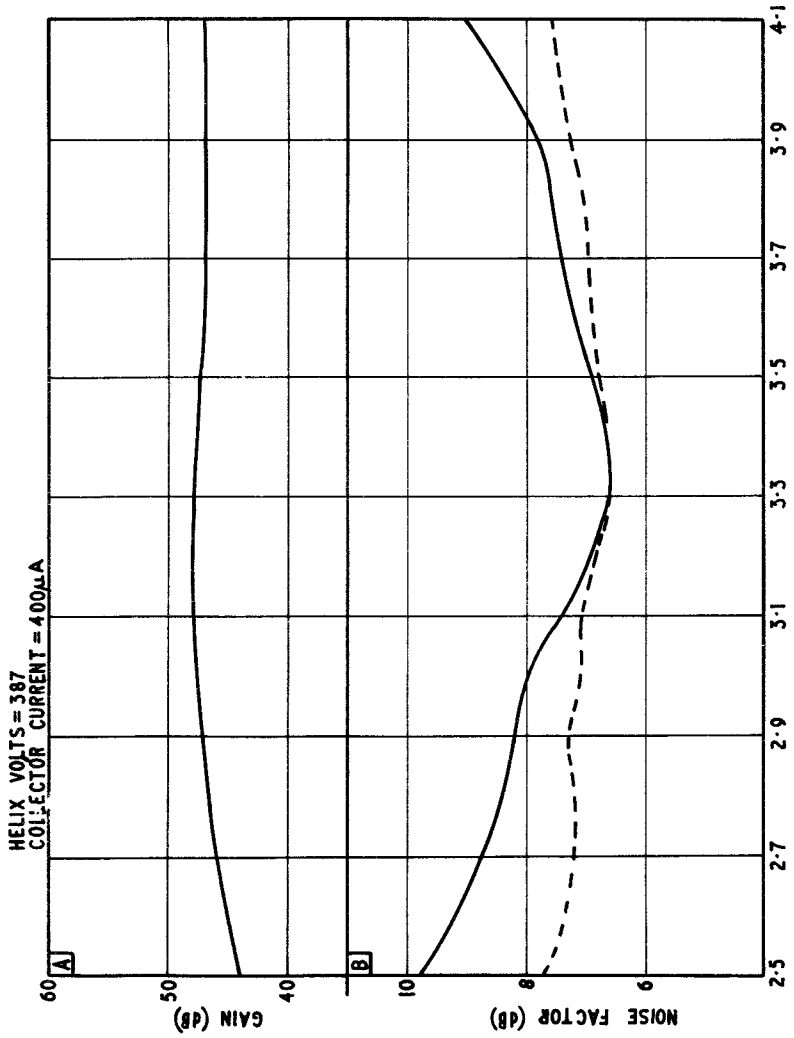

A. FREQUENCY VERSUS GAIN (dB)

B. FREQUENCY VERSUS NOISE FACTOR (dB)

MINISTRY OF AVIATION - DLRD/RRE

VALVE ELECTRONIC CV6094

Specification MOA/CV 6094
Issue 1 dated 28. 9. 61.
To be used in conjunction with K1001

SECURITY	
Specification	Valve
Unclassified	Unclassified

indicates a change

TYPE OF VALVE - Voltage Indicator

CATHODE - Directly heated

ENVELOPE - Glass unmetallised

PROTOTYPE - DM160

MARKING

See K1001/4

BASE

Special Subminiature

RATING

All limiting values are absolute

		Note
Heater Voltage	(V)	1.0
Heater Current	(mA)	30
Max Anode Voltage (Ia = 0)	(V)	100
Max Operating Anode Voltage	(V)	65
Max Anode Current	(uA)	750
Max.Grid-Cathode Resistance	(mohms)	1.0
Max Grid Voltage	(V)	-50
Max Grid Voltage (Rg =100K ohms)	(V)	0

MOUNTING POSITION

Any

CONNECTIONS

See Page 3

JOINT SERVICE CATALOGUE NUMBER

5960-99-037-2516

DIMENSIONS

See Page 3

CV6094

TESTS

To be performed in addition to those applicable in K10001

Test Conditions unless otherwise stated:-

Vh(V)	Va(V)	Rg1 (Kohm)	Vg1(V)
1.0	50	100	0

K1001 Ref	TEST	TEST CONDITIONS	AQL %	Insp. Level	Symbol	LIMITS Min	LIMITS Max.	Units
	Ins: A - all	V = 50v	1.0	II		50	-	Mohm
	Ins: G - all	V = 50v	1.0	II		50	-	Mohm
	Heater Current Note 2		0.4	II	If	24	36	mA
	Anode Current Note 2		0.4	II	Ia	430	740	uA
	Anode Current 2 Note 2	Vg1 = -3V	0.4	II	Ia	-	5.0	uA
	Life Test 500hrs	Note 3	Note 3					
	Life Test End Point				Ia	320		uA

NOTES

1. For the purpose of this specification, samples for acceptance shall be taken from each identifiable batch of valves during a period not exceeding one month and not exceeding 3000 valves.

2. The Combined AQL for this group of tests shall be 1.0%.

3. For life test a sample of 5 valves is to be taken from each batch and run to the following conditions:-

   Vf = 1.0, Va = 50v. Vg1 = 0 Rg1 = 100K.

   A batch is to be acceptable if there is not more than one reject to the specified end point, and rejected if there are four or more rejects.

   If there are two or three rejects a second sample of 10 valves is to be run and after 500 hours there must be not more than a total of three rejects in 15 samples.

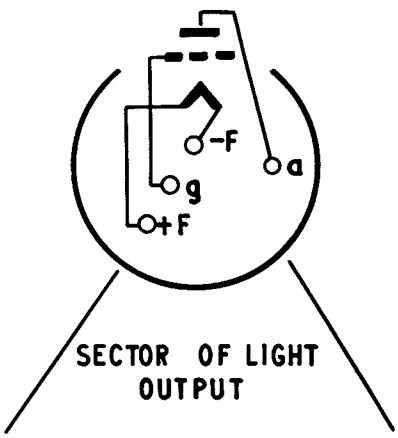

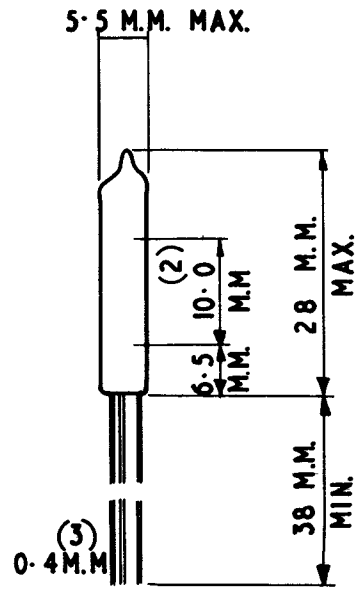

(2) LENGTH OF LIGHT BAR

(3) LEADS TO BE GOLD PLATED OR TINNED.

VALVE ELECTRONIC

ADMIRALTY SURFACE WEAPONS ESTABLISHMENT

CV6096

Specification AD/CV6096
Issue No. 1A dated 1.1.64
To be read in conjunction with K1001 excluding
Section 10. Climatic Tests.

SECURITY	
Specification	Valve
Unclassified	Unclassified

TYPE OF VALVE: Travelling wave power amplifier, X-band, (low modulation noise).

CATHODE: Indirectly heated.

ENVELOPE: Packaged in a periodic magnetic focussing system.

PROTOTYPE: VX3291

RATING

(All limiting values are absolute and non-simultaneous)

			Note
Max. Heater Voltage	(V)	6.0	A
Max. Heater Current	(A)	10.0	
Max. Grid 1 Voltage	(V)	0	B,C,D,E
Max. Grid 2 Voltage	(V)	1000	B,D
Max. Grid 2 Current	(mA)	1.5	
Max. Helix Voltage	(kV)	2.8	B,C
Max. Helix Current	(mA)	2.0	
Max. Collector Voltage	(kV)	2.8	B
Max. Collector Current	(mA)	10	C

TYPICAL WORKING CONDITIONS

			Note
Heater Voltage	(V)	4.5 ± 5%	A
Heater Current	(A)	3.5 to 4.5	
Grid 1 Voltage	(V)	0 to -30	B,C,D,E
Grid 2 Voltage	(V)	350 to 700	B,D
Grid 2 Current	(mA)	0 to 1.0	
Helix Voltage	(kV)	2.2 to 2.6	B,C
Helix Current	(mA)	0 to 2.0	
→ Collector Voltage	(kV)	2.35 to 2.75	B
Collector Current	(mA)	6 to 8	C
Frequency Range	(kMc/s)	7 to 11.5	
Min. Cold Attenuation	(dB)	40	
Power input v_s Power Output			F
Noise Output			F,G
The v.s.w.r. of the input and output measured with I_{col} at the specified value is not greater than 3:1.			H

MARKING

See K1001/4
See also Notes C, F and L on page 2.

BASE

Special 7 pin. See page 5.

CONNECTIONS

PIN LETTER	ELECTRODE	
A	Grid 2	g2
B	N.C.	
C	Helix	hel
D	Grid 1	g1
E	Heater	h
F	Cathode-heater	k, h
H	Collector (Body)	Col.

DIMENSIONS

See drawing on page 5.

MOUNTING POSITION

Any (but see Note J.)

OPERATING TEMPERATURE

See Note J.

WEIGHT

5 lbs.

NOTES

A. The cathode pre-heating time is 2 minutes.

B. All voltages are measured relative to the cathode. The collector is connected to the body and is normally earthed. The helix voltage should never exceed the collector voltage.

C. The operating Grid 1 and Helix voltages and Collector current are marked on each valve. These shall be set to the following accuracies:-

Helix Voltage	± 1%
Grid 1 Voltage	± 15%
Collector Current	± 2%

D. It must be possible to reduce this voltage to zero.

E. This voltage must be available at any value of beam current.

F. As the r.f. power input is varied from 0.5 mW to 5 mW the power output does not fall below 100 mW and the range of power output does not exceed 10 dB; the noise output is not greater that 60 dB above KTB referred to 290°K. The maximum and minimum output powers will be stated on the valve.

G. Obtained by measuring the output from a crystal using a receiver having a pass band 5-50 Mc/s.

H. The valve must be operated in an r.f. circuit presenting a v.s.w.r. not greater than 5:1.

J. The valve is designed to be mounted horizontally and bolted to a heat sink of temperature not greater than 70°C and in such a position that air at a temperature of not greater than 70°C can circulate freely over the cooling fins. When operated in other mounting positions and/or higher ambient temperatures forced air cooling may be required.

K. The setting-up procedure is as follows:

(i) Switch on the heater and increase the voltage slowly to the correct value; the surge current must not be allowed to exceed 10 amps. Wait for at least 2 minutes.

(ii) Switch on G1, Helix and collector voltages, ensuring G2 voltage is zero. Set these voltages to the values indicated on the valve.

(iii) Switch on G2 and increase the voltage gradually until I_{col} reaches the operating value marked on the valve.

(iv) Readjust G1, Collector and Helix voltages to required values as necessary.

(v) Apply r.f. power input.

The above procedure is reversed for switching off.

L. A warning label stating that the valve must be kept at least 8 inches from magnets shall be affixed to each valve. The valve may be bolted to a steel chassis.

M. The Joint Services Catalogue number is: 5960-99-037-2539.

CV6096

TESTS

To be performed in addition to those applicable in K1001, excluding Section 10 Climatic Test.

Test Conditions - Unless Otherwise Specified

V_h (V)	V_{col} (V)	V_{hel}, V_{g1} and I_{col}
4.5	(V_{helix} +150V)	Values marked on valve

	Test	Test Conditions	AQL %	Insp. Level	Symbol	Limits Min.	Limits Max.	Units
a	Heater Current	No voltages except V_h Note 1.		100%	I_h	3.5	4.5	A
b	Grid 2 Voltage	Note 2.		100%	V_{g2}	350	700	V
c	Grid 2 Current	As (b)		100%	I_{g2}	-	1.0	mA
d	Helix Current	As (b)		100%	I_{hel}	-	1.0	mA
e	Hot v.s.w.r.	As (b). Measured over the frequency range 7.0-11.5 kMc/s		100%				
		(a) Input				-	3.1	Ratio
		(b) Output				-	3.1	Ratio
f	R.F. Power Outputs	As (b). Apply r.f. power input varying from 0.5 mW to 5.0 mW at each of the three frequencies 7,000 ± 50 Mc/s 9,000 ± 50 Mc/s 11,500 ± 50 Mc/s Observe maximum and minimum r.f. power outputs		100%				
		(i) Overall range of Power Output					10	dB
		(ii) Level of Power Output				100		mW
g	High Level Noise Output	As (b). Note 3. At frequencies:- 7,000 ± 50 Mc/s 9,000 ± 50 Mc/s 11,500 ± 50 Mc/s		100%		-	60	dB
h	Life	See Note 4.				See Note 4		

NOTES

1. The surge current shall not exceed 10 Amps.

2. During adjustment and test the helix current shall not exceed 2.0 mA.

3. (i) Measure the low level noise output (i.e. the output noise without application of r.f. Power Input) by comparing the noise with that from a standard noise source, the detector being a broad-band crystal and receiver having a pass band 5-50 Mc/s. Note the reading X dB.

   (ii) Apply an r.f. input signal of power 0.5 mW and compare the noise output with the low level noise output at each of the specified frequencies. Note the difference Δ dB, which may be positive or negative.

   (iii) The High Level Noise Output is then $x + \Delta$ dB.

4. Life Test.

   (a) The sample size shall be as follows:

Lot size	Sample size
1-25	1
26-50	2
51-100	3
101 or greater	2%

   The manufacturer may test additional samples at his discretion.

   (b) For the first lot of any production order, deliveries shall be held until satisfactory completion of a minimum of 250 hours life. Where previous life test data is available deliveries may be released at the discretion of the Authority.

   Thereafter, where previous results have proved satisfactory shipment of valves may be permitted without awaiting results of current tests.

   (c) The criterion of acceptance shall be that the average life of the sample shall be at least 500 hours.

   (d) In the event of a failure the Approving Authority shall be informed.

   (e) The end of life is reached when after adjustment of voltages within the specified limits, the valve fails to meet the specification except that the level of R.F. power, noise and gain may deteriorate by 3 dB.

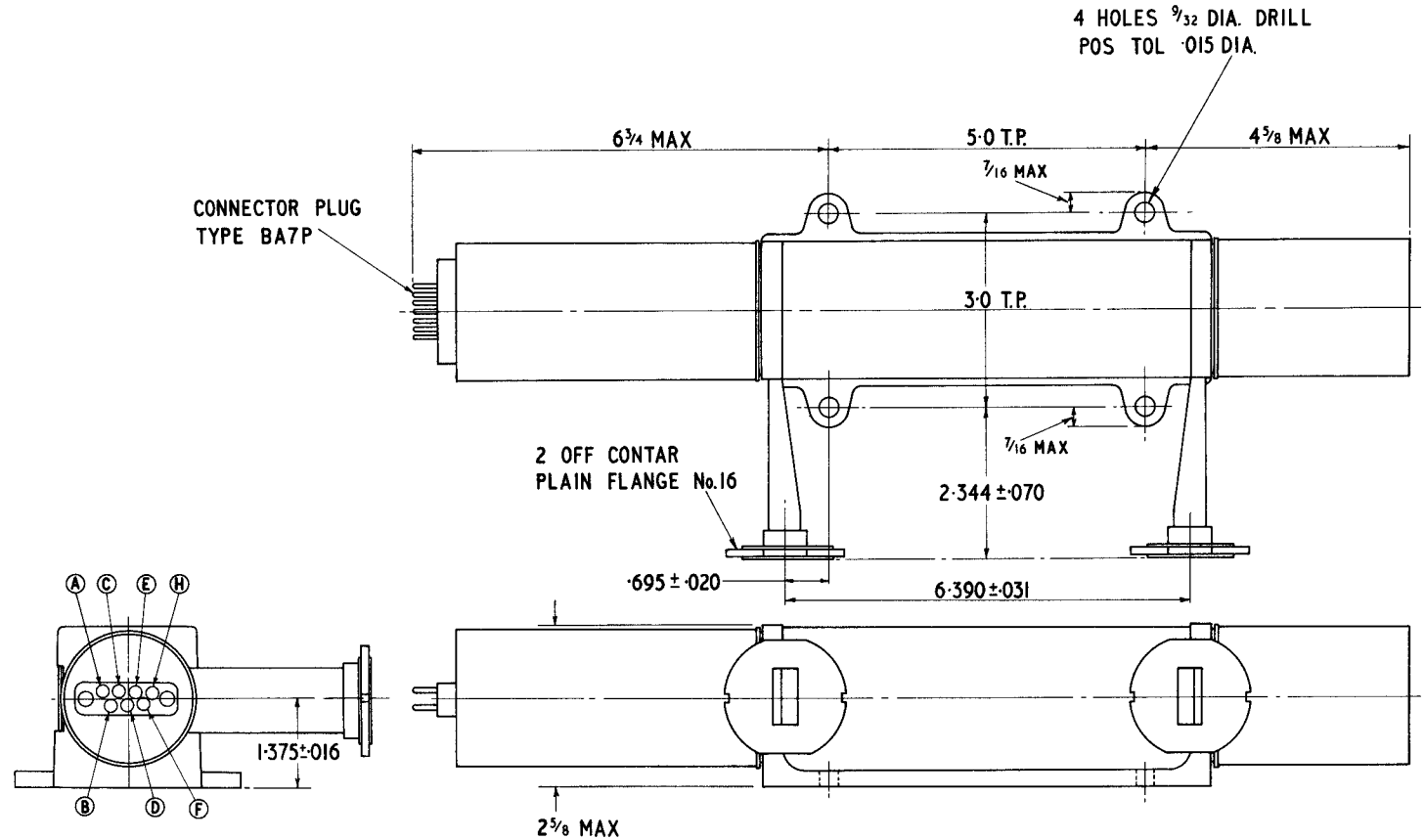

PIN A – GRID 2 (g_2)
B – N.C.
C – HELIX (hel)
D – GRID 1 (g_1)
E – HEATER (h)
F – CATHODE-HEATER
H – COLLECTOR (coll) BODY

VALVE OUTLINE

VALVE ELECTRONIC

ADMIRALTY SURFACE WEAPONS ESTABLISHMENT

CV6097

Specification AD/CV6097 Issue 1 Dated 24.11.61. To be read in conjunction with K1001, BS.448 and BS.1409.	SECURITY Specification: Unclassified Valve: Unclassified

TYPE OF VALVE: Triode Shunt Stabiliser.

CATHODE: Indirectly heated.

ENVELOPE: Glass.

PROTOTYPE: E2792.

MARKING

See K100/4

BASE

B9A

See BS.448/B9A

RATINGS

(Not for inspection purposes)

(All limiting values are absolute)

			Note
Heater Voltage	(V)	6.3	
Heater Current	(A)	0.3	
Max. Anode Voltage	(kV)	5	
Max. Anode Dissipation	(W)	6	
Max. Cathode Current	(mA)	10	
Max. Grid Voltage(Negative)	(V)	100	
Max.Heater/Cathode Voltage	(V)	±150	
Amplification Factor		200	A
Mutual Conductance	(mA/V)	0.6	A
Max. Bulb Temperature	(°C)	200	B

CONNECTIONS

PIN	ELECTRODE	
1	IC	
2	Grid	g
3	IC	
4	Heater	h
5	Heater	h
6	IC	
7	Cathode	k
8	IC	
9	IC	
Top Cap	Anode	a

TOP CAP

CT1

See BS.448/CT1

Capacitances (Nom.)			
Cin.	(pF)	4.4	C
Cout.	(pF)	1.3	
Ca-g	(pF)	1.5	
Ch-k	(pF)	3.5	

DIMENSIONS

	MIN.	MAX.
A.Seated Height (mm.)	48	54
C.Diameter (mm)	-	22
D.Overall Length (mm)	54	60

MOUNTING POSITION

ANY

NOTES

A. Measured at V_a = 5 kV; I_a = 1 mA.

B. Caution to Electronic Equipment Design Engineers.

Special care should be given in design of equipments to ensure that the rated bulb temperature is not exceeded: life and reliability are functions of bulb temperature and designers are advised to keep this temperature as far below the rated value as possible.

Life and reliability are also dependent on operating voltages, currents and dissipation. To ensure the reliability necessary for Service requirements valves should, where possible, be operated conservatively and under no circumstances should the maximum ratings be exceeded. Anode dissipation, heater to cathode voltage and variation of heater supply voltage are particularly important in this connection.

C. Measured on an unshielded valve.

D. The Joint Services Catalogue No. is: 5960-99-037-2559.

CV6097

TESTS

To be performed in addition to those applicable in K1001

Tests are to be performed in the specified order unless otherwise agreed with the Inspecting Authority

Test conditions - unless otherwise stated:-

V_h	V_a	I_k
(V)	(kV)	(mA)
6.3	5.0	1.0

	Test	Test Conditions	AQL %	Insp. Level	Symbol	Limits Min.	Limits Max.	Units
	Group A							
	Heater Current.	No voltages except V_h		100%	I_h	275	325	mA
	Negative Grid Voltage (1).			100%	V_g	18	26	V
	Reverse Grid Current.	Note 1		100%	I_g	-	1	µA
	~~Mutual Conductance.~~			~~100%~~	~~gm~~	~~0.4~~	~~1~~	~~mA/V.~~
	Negative Grid Voltage (2).	I_k = 50µA		100%	V_g	22	36	V
	~~Cathode Current~~	V_a = 500V, V_g = -1V		100%	I_a	5	10	mA
	Groups B and C omitted							
	Group D							
	Capacitances	Measured with an unshielded valve on a 1 Mc/s bridge.	Note 2	Code D				
	Cin.					3.8	5.0	pF
	Cout.					1.0	1.6	pF
	Ca-g					1.2	1.8	pF
	Ch-k.					-	5.0	pF
	Group E omitted							
	Group F		Note 2	Code D				
	Life Test	V_a = 5 kV, I_a = 1 mA, R_k = 22k ohms (approx.)						
	Life Test End Point (500 hours)							
	Heater current					275	325	mA
	Reverse Grid Current.	Note 3					4	µA
	Mutual Conductance					0.4 or 50% of initial value - whichever is the greater.	-	mA/V.

NOTES

Not more than 1 µA of this total is to be gas current.

The AQL limits for these tests will be included later when manufacturing experience has been gained.

Not more than 1.5 µA of this total is to be gas current.

4. A protective resistance of at least 50 K ohms shall be inserted in the output from the supply'.

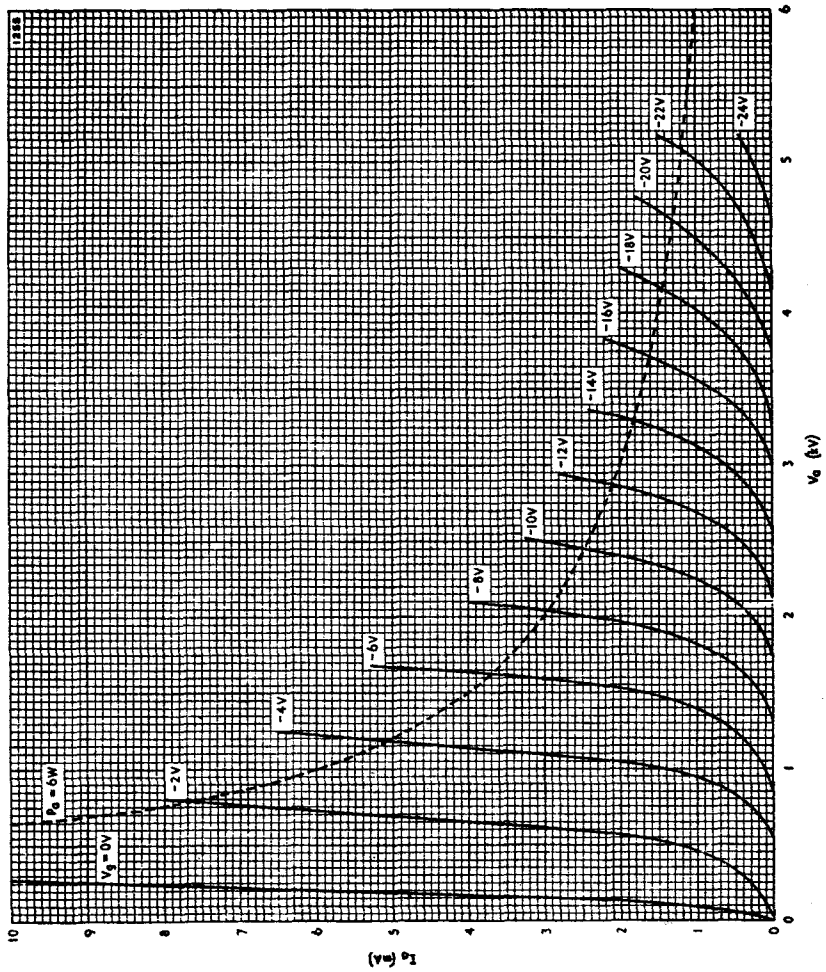

P_a = 6W
V_g = 0V
-2V
-4V
-6V
-8V
-10V
-12V
-14V
-16V
-18V
-20V
-22V
-24V
V_a (kV)
I_a (mA)

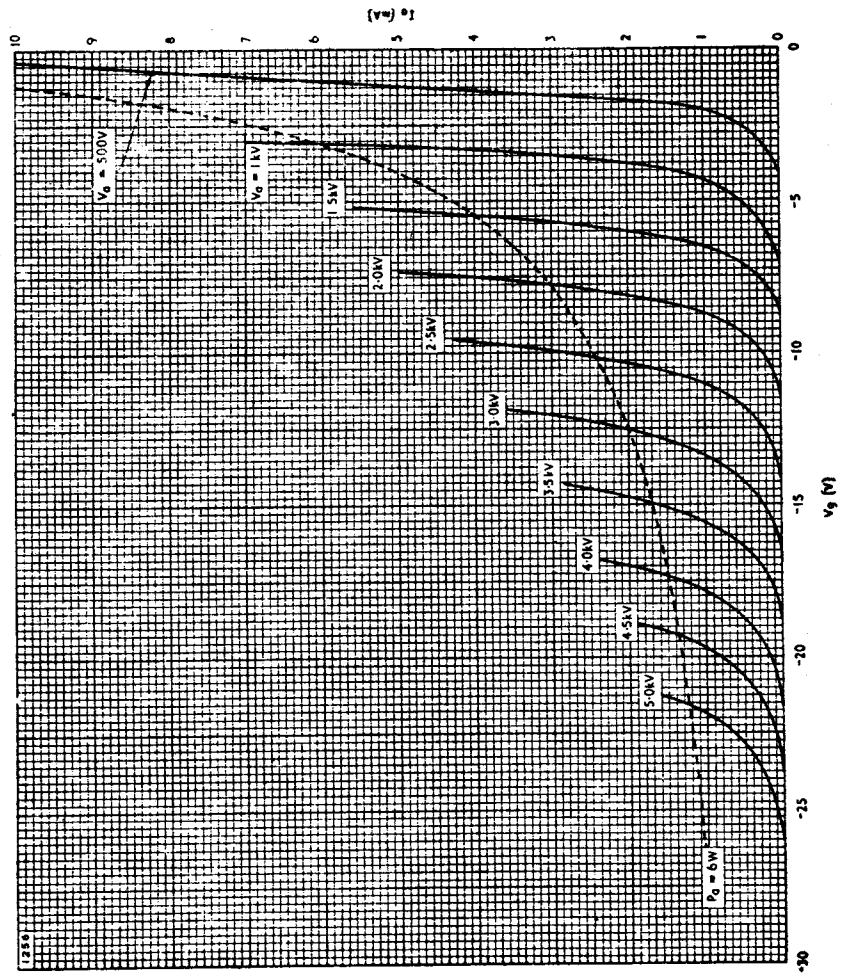
I_a (mA)
10
9
8
7
6
5
4
3
2
1
0
0
-5
-10
-15
-20
-25
-30
V_g (V)
V_a = 500V
V_a = 1kV
1·5kV
2·0kV
2·5kV
3·0kV
3·5kV
4·0kV
4·5kV
5·0kV
P_a = 6W
1236

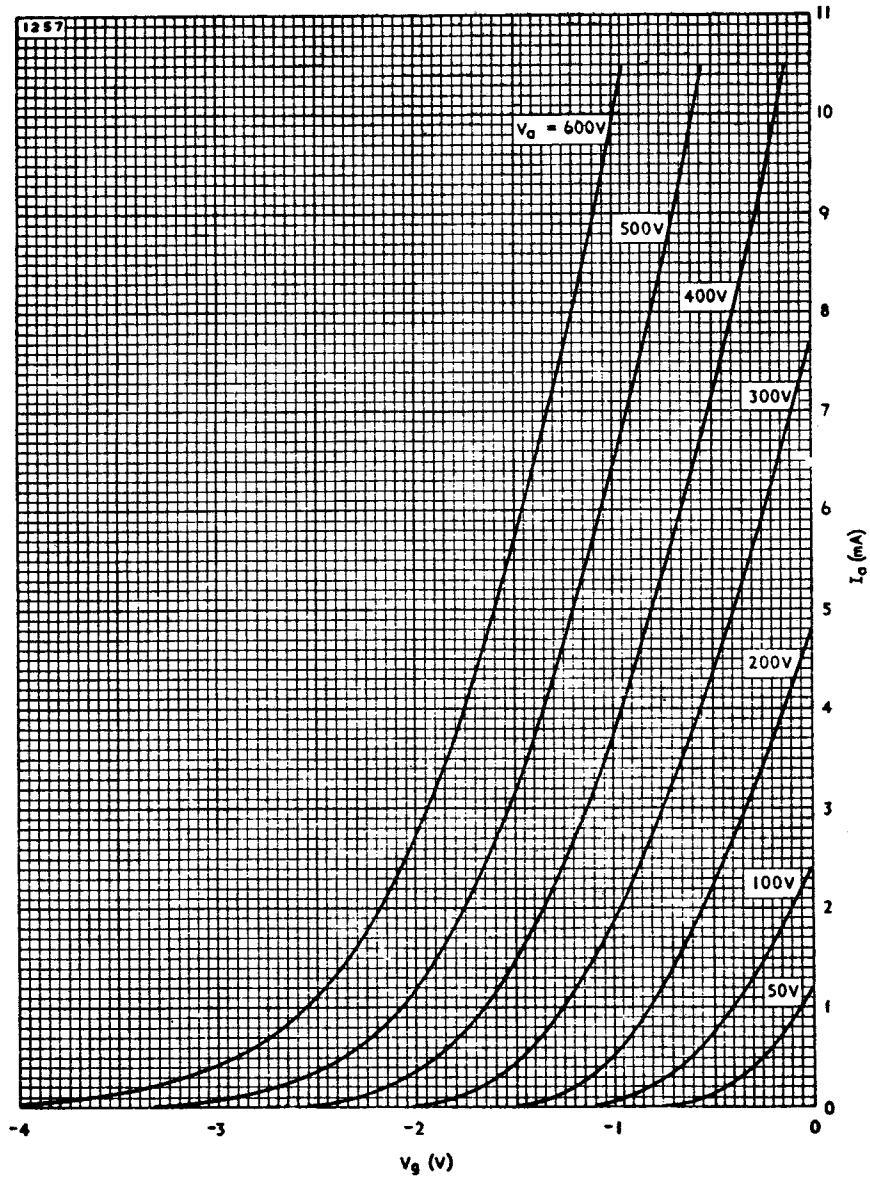
1257
V_a = 600V
500V
400V
300V
200V
100V
50V
I_a (mA)
0
1
2
3
4
5
6
7
8
9
10
11
-4
-3
-2
-1
0
V_g (V)

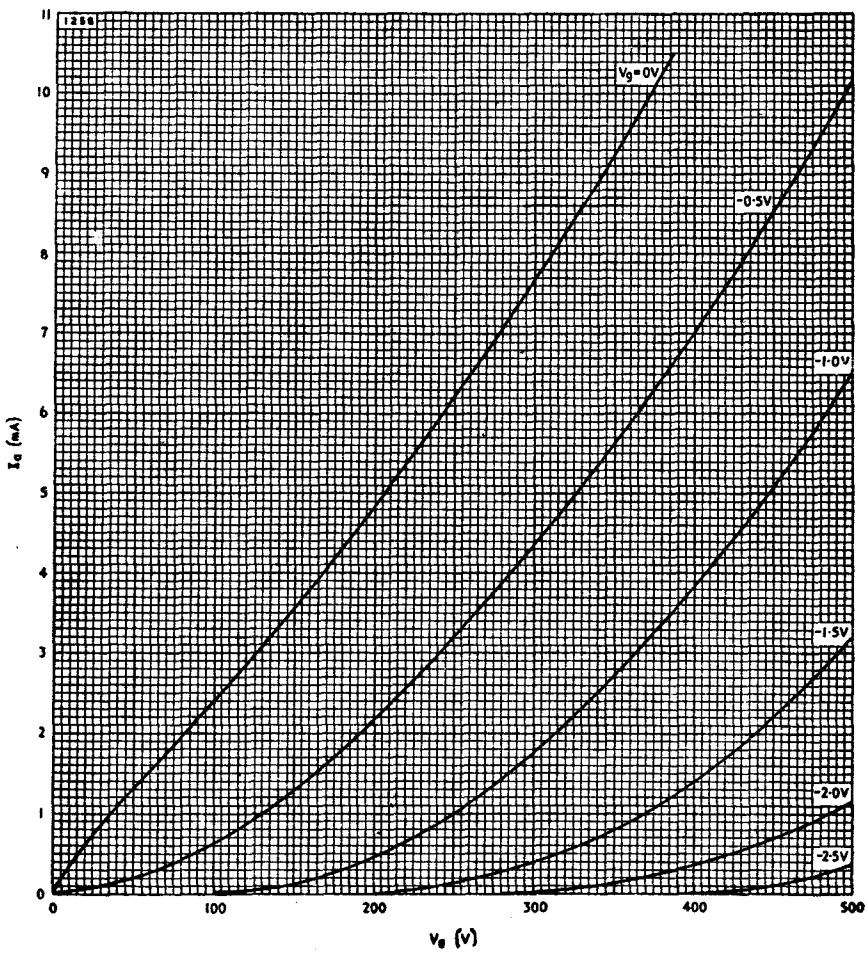
1258
V_g=0V
-0·5V
-1·0V
-1·5V
-2·0V
-2·5V
I_a (mA)
V_a (V)
0
1
2
3
4
5
6
7
8
9
10
11
0
100
200
300
400
500

CV6098

VALVE ELECTRONIC

ADMIRALTY SURFACE WEAPONS ESTABLISHMENT

Specification AD/CV6098 Issue 1 dated 31-12-'61 To be read in conjunction with K1001	SECURITY Specification: Unclassified Valve: Unclassified

TYPE OF VALVE: Low noise Travelling Wave Amplifier
CATHODE: Indirectly heated
ENVELOPE: Metal and Glass
PROTOTYPE: VX2526

MARKING

See K1001/4

BASE

BS.448/B8-0 but see drawing on Page 6

RATING

(All limiting values are absolute and non-simultaneous)

		Note
Heater Voltage (V)	6.3±2%	
Heater Current (Nom.) (A)	0.36	
Heater Current (peak starting) (A)	4	
Max. Grid 1 Voltage (Negative) (V)	100	B
Max. Grid 1 Dissipation (W)	0.1	
Max. Grid 2 Voltage (V)	150	A
Max. Grid 2 Dissipation (W)	0.1	
Max. Grid 3 Voltage (V)	300	A
Max. Grid 3 Dissipation (W)	0.1	
Max. Grid 4 Voltage (V)	650	A
Max. Grid 4 Dissipation (W)	0.1	
Max. Helix Voltage (V)	650	A
Max. Helix Current (μA)	25	
Max. Collector Voltage (V)	800	A,C,D
Max. Collector Current (μA)	400	
Peak R.F. Input Power (W)	100	
Mean R.F. Input Power (W)	0.5	
Min. Cathode Pre-heating time (mins.)	1.5	E
Max. Capsule Temperature (°C)	150	

TYPICAL OPERATING CONDITIONS

		Note
Grid 1 Voltage (Negative) (V)	7.5	A,B
Grid 2 Voltage (V)	45	A
Grid 3 Voltage (V)	70	A
Grid 4 Voltage (V)	440	A
Helix Voltage (V)	585	A
Collector Voltage (V)	720	A
Helix Current (μA)	1	
Collector Current (μA)	350	
Magnetic Field (oersteds)	520	G
Frequency Range (kMc/s)	4.1 to 7.0	
Noise Factor (4.5 to 6.5k Mc/s (dB)	9.5	H
Noise Factor (4.1 to 7.0k Mc/s (dB)	10.0	H
Working Saturated Power Output (4.5 to 6.5k Mc/s) (mW)	4.5	H
Working Saturated Power Output (4.1 to 7.0k Mc/s) (mW)	3.0	H
Small Signal Gain (4.5 to 6.5k Mc/s) (dB)	40.0	H
Small Signal Gain (4.1 to 7.0k Mc/s) (dB)	37.0	H
Cold Attenuation (4.1 to 7.0k Mc/s) (dB)	65.0	H

CONNECTIONS

PIN	ELECTRODE
1	Cathode and Heater k, h
2	Heater h
3	Grid 2 g2
4	Grid 4 g4
5	Helix hel.
6	Collector and Capsule Col.
7	Grid 1 g1
8	Grid 3 g3

R.F. CONNECTORS

Both the "Input" and "Output" connectors are to Joint Services Catalogue No. 5935-99-911-6861.

DIMENSIONS

See Drawing on Page 6

MOUNTING POSITION

ANY, but see Note J on Page 3

OPERATING TEMPERATURE

Absolute maximum ambient temperature = 70°C but see Note K on Page 3.

WEIGHT

Solenoid (approx.) 19 lbs
Valve (approx.) 1¼ lbs

NOTES

For Notes A to M incl. see Pages 2 and 3.

NOTES

A. These potentials are positive with respect to cathode.

B. Grid 1 voltage is negative with respect to cathode.

C. Collector, R.F. connectors and capsule are internally connected and are at the same potential as the solenoid frame which is usually earthed.

D. The collector potential must be a minimum of 100 volts positive with respect to the helix.

E. The time between application of full heater voltage and the subsequent drawing of current from the cathode.

F. The setting-up procedure is as follows:-

Note: This tube is operated in a focussing solenoid and H.T. voltages must not be applied to the tube unless the solenoid is switched on.

1. Insert the tube in the solenoid. Apply pressure to the end cap rather than the R.F. connectors and ensure that the tube is fully home in the socket. Secure the locking device and centralise the tube with the adjusting screws.

2. Set grid 2 voltage control to its minimum position and switch on heater and H.T. voltages.

3. Allow approximately two minutes for the cathode to heat up and adjust all voltages except grid 2 to their recommended values.

4. Increase grid 2 voltage slowly observing both the helix and collector currents. The helix current will normally rise rapidly to its limiting value and it will be necessary to adjust the centering of the tube to obtain a minimum. Continue to increase grid 2 voltage and adjust the centering until a collector current of 350 μA is obtained with a helix current of less than 10 μA. The helix current should never be allowed to exceed 25 μA and should be finally set to the lowest possible value.

Note: For subsequent operation the tube may be switched on without adjustment.

5. If the recommended voltages on the test sheet accompanying the tube have been adhered to the tube should now be ready for use over the whole frequency band 4100 to 7000 Mc/s.

If the full "setting-up" information is not available or it is desired to obtain optimum performance over a particular band of frequencies the following procedure should be followed:-

Apply an R.F. signal of power level less than -50 dbm to the input of the tube, connect a suitable receiver to the output and adjust the helix voltage to give maximum power output.

Remove the input signal and adjust grid 3 and grid 4 voltages alternately until the receiver output is a minimum.

The tube is now set up to give the lowest noise factor for the frequency used. To obtain best full band performance these operations should be carried out at 5600 Mc/s.

G. When operated in the approved solenoid the current in the field coils giving this field strength is 9.0A, at approx. 18 volts.

NOTES (CONT'D)

H. The typical value is the average over the frequency range when the tube has been adjusted for best performance at 5.6k Mc/s.

J. The valve will operate in any position with suitable fixing arrangements on the mount.

K. This absolute maximum ambient temperature of 70°C is permissible only so long as the solenoid is mounted on a heat sink consisting of an aluminium or brass plate 10 inches x 19 inches by at least $\frac{1}{8}$ inch thick or equivalent. The maximum ambient temperature allowable without the heat sink is 50°C.

L. The solenoid is not supplied with the valve.

M. The Joint Services Catalogue Number is:- 5960-99-037-2563.

TESTS

To be performed in addition to those applicable in K1001

Tests are to be performed in the specified order unless otherwise agreed with the Inspecting Authority.

Test conditions - unless otherwise stated:- (Note 1)

V_h (V)	V_{g1} (V)	V_{g2} (V)	V_{g3} (V)	V_{g4} (V)	V_{hel} (V)	V_{col} (V)	I_{col} (μA)	Magnetic Field (oersteds)
6.3	-7.5	Adjust	Adjust	Adjust	Adjust	720	350	520

	Test	Test Conditions	AQL %	Insp. Level	Symbol	Limits Min.	Limits Max.	Units
a	Heater Current	No voltages except V_h No magnetic field		100%	Ih	0.33	0.39	A
b	(i) Helix Current	V_{g3} = 70V V_{g4} = 440V V_{hel}= 585V Note 2		100%	Ihel		10	μA
	(ii) Grid 2 Voltage	V_{g3} = 70V V_{g4} = 440V V_{hel}= 585V I_{hel}= value obtained in (i) above. Note 2		100%	V_{g2}	30	60	V
c	(i) Helix Voltage	V_{g2} = Value obtained in test "b(ii)" Notes 2 and 3		100%	V_{hel}	565	605	V
	(ii) Grid 3 Voltage			100%	V_{g3}	50	90	V
	(iii) Grid 4 Voltage at a frequency of 5.6k Mc/s	V_{hel} = Value obtained in test "c(i)"		100%	V_{g4}	380	500	V
d	Noise Factor at	Conditions as in test "c"						
	(i) 4.5 to 6.5k Mc/s			100%		-	11.0	dB
	(ii) 4.1 to 7.0k Mc/s			100%		-	13.5	dB
e	Small Signal Gain at	Conditions as for test "c"						
	(i) 4.5 to 6.5k Mc/s	Note 4		100%		32	-	dB
	(ii) 4.1 to 7.0k Mc/s	Note 5		100%		27	-	dB

CV6098

TESTS (CONT'D)

	Test	Test Conditions	AQL %	Insp. Level	Symbol	Limits Min.	Limits Max.	Units
f	Working Saturated Power Output at	Conditions as for test "c"						
	(i) 4.5 to 6.5k Mc/s	Note 4		100%		1.0	-	mW
	(ii) 4.1 to 7.0k Mc/s	Note 5		100%		1.0	-	mW
g	Stability Oscillation Power	V_{g3} =)Values obtained V_{g4} =)in test "c" V_{hel} = Vary 500V to 650V I_{col} = 400 µA Notes 2 and 6		100%		-	10^{-5}	W

1. These tests are to be performed in a solenoid which has been approved by the Type Approving Authority by comparison with the reference standard held by that Authority.

   These tests shall not be made until at least three minutes after full heater voltage has been applied.

2. Initially grid 2 potential is set to its minimum voltage and then slowly increased, observing helix and collector current. The centering screws of the solenoid are then adjusted to reduce the helix current to a minimum as the collector current is increased to the required value.

3. With an input signal of 5.6k Mc/s weaker than -50 dBm the helix potential is adjusted to give maximum power output. Then with no input signal grid 3 and grid 4 potentials are adjusted to give minimum noise power output. These voltage adjustments should then be checked to ensure optimum performance.

4. Measurements are to be made at 4.5, 5.0, 5.5, 6.0 and 6.5k Mc/s.

5. Measurements are to be made 4.1, 4.2, 6.9 and 7.0k Mc/s.

6. The valve shall be focused as in Note 2 but with the higher collector current indicated. The input and output of the tube shall be terminated in short circuits of variable phase, the output shall also be connected to a calibrated power detector, and the helix voltage shall be varied over the range indicated. Any spurious oscillation present shall be maximised by adjustment of the short circuits and helix voltage and its power measured.

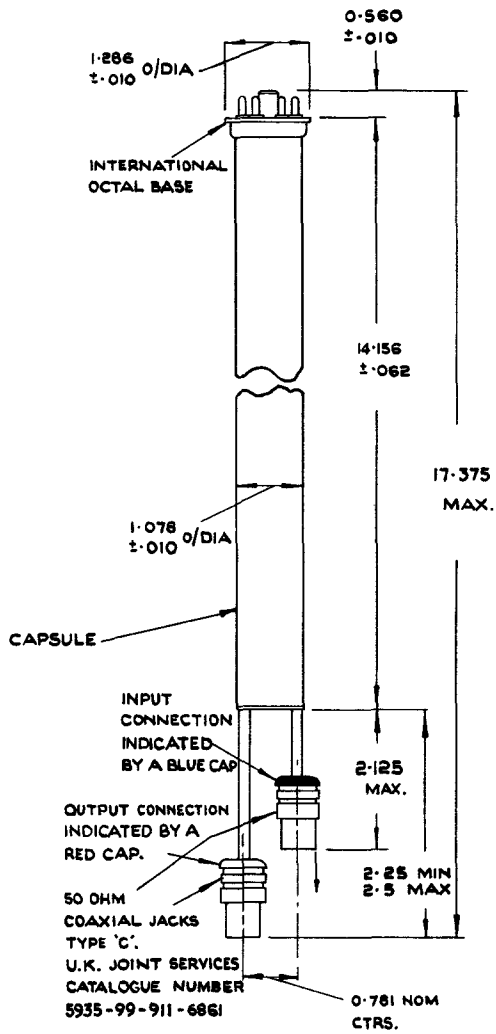

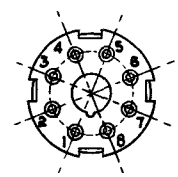

VIEW SHOWING
BASE PIN CONNECTIONS

PIN No.	CONNECTION
1	CATHODE & HEATER
2	HEATER
3	GRID 2
4	GRID 4
5	HELIX
6	COLLECTOR & CANISTER
7	GRID 1
8	GRID 3

OUTLINE DRAWING OF TUBE IN CAPSULE

DIMENSIONS IN INCHES

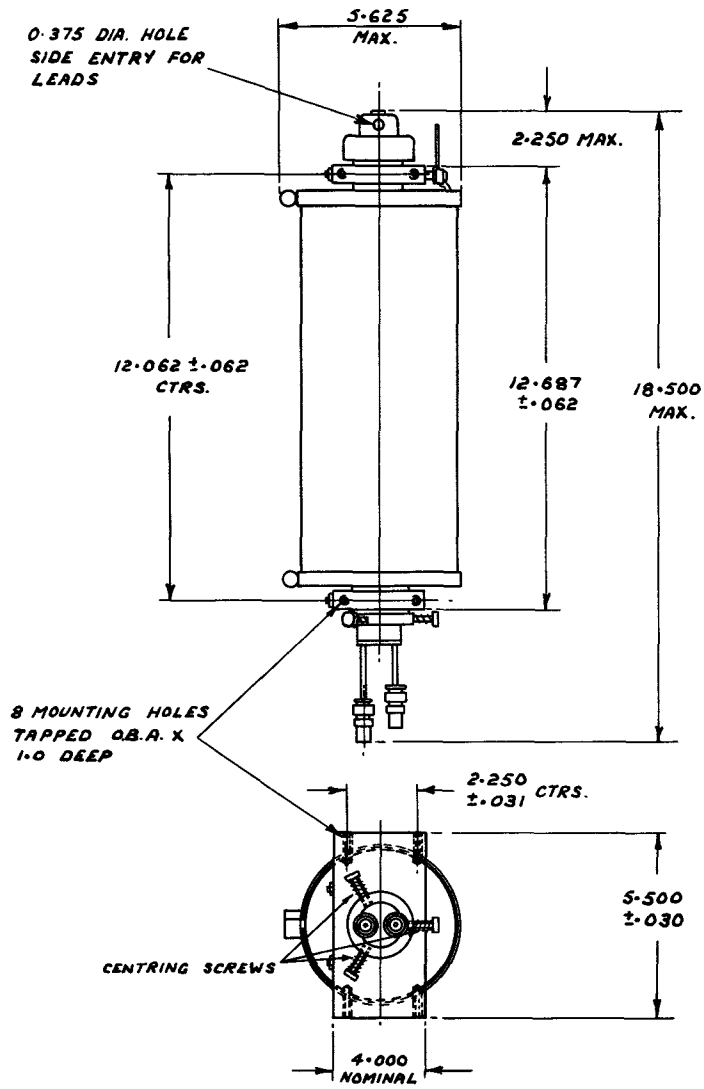

NOTE:- WITHDRAWAL CLEARANCE OF VALVE FROM SOLENOID TO BE A MINIMUM OF 16 INCHES

OUTLINE DRAWING OF TUBE IN SOLENOID
FOR INFORMATION OF EQUIPMENT DESIGNERS

DIMENSIONS IN INCHES

VALVE ELECTRONIC CV6099

SPECIFICATION M.O.A./CV 6099 Issue 1, dated 2nd June, 1964. Also subject to the relevant provisions of the latest issue of the associated J.S. Specification K1001.	SECURITY	
	Specification	Valve
	Unclassified	Unclassified

Type of Valve - Image Converter Tube, Near Infra-Red Sensitive.

Cathode - Caesium silver oxide. S1

Screen - Aluminium backed, GG5. P20

Type of Focus - Self Focussing, Electro-Static.

Envelope - Glass with metal ring connectors.

Prototype - VX 8515

MARKING
See K1001/4
Additional Marking:-
Serial No. on the outside of the tube.

DIMENSIONS
See drawing on page 13

MOUNTING POSITION
Any. See Note A

WEIGHT
1.5 ozs. approx.

Ratings, Characteristics and Typical Operation
(not for Inspection purposes)
All limiting values are absolute

			NOTE
Ratings			
Max. Peak Instantaneous Screen Voltage	(kV)	13.0	B
Max. Continuous Screen Voltage	(kV)	12.5	B
Min. Screen Voltage	(kV)	8.0	B
Max. Photocathode Current (continuous)	(μA)	0.1	
Max. Photocathode Illumination (continuous)	(lux)	10 IRF	D
Max. Storage Temperature	(°C)	68	E
Characteristics (At Ambient Temp. of 20°C and a Screen Voltage of 12 kV where applicable)			
Peak Spectral Response	(Angstroms)	8000 ± 1000	
Conversion Index (C.I.) (Min.)		10	C
Magnification at Centre (nom.)		0.75	
Resolution at Centre of Photocathode (Min.)		30 line pairs/mm	
Background Equivalent Illumination (Eo) (Max.)	(lux)	0.025 IRF	F
Dark Current (Max.)	(μA)	0.02	
Typical Operation			
Screen Voltage	(kV)	12	B

NOTES

A. This tube should be handled by the metal ring connectors in order to avoid producing a conducting surface on the glass.

Avoid exposure to direct sunlight.

Connections to the tube should not be soldered to the metal ring connectors.

Equipment designers are advised that magnetic shielding may be required to minimise the defocussing effects of extraneous fields.

B. Referred to cathode.

C. Measured as specified in test t.

D. This value is the maximum illumination which may be allowed to fall on the infra-red filter which must be interposed between the light source and the photocathode.

E. This is the maximum temperature which the tube may encounter at any time. To prevent deterioration it must not be stored at a temperature of 50°C or above for longer than 500 hours.

F. Measured as specified in test u.

G. Joint Services Catalogue No. 5960-99-037-2574.

TESTS

To be performed in addition to those applicable in K1001. Tests shall be performed in the specified order unless otherwise agreed with the Inspecting Authority. Tests a, b, c and s shall not be performed more than once. Where sampling tests are called for, a lot shall be taken as one calendar month's production.

Test Conditions - Unless otherwise stated

i An operating voltage of 12.0 kV D.C. negative with respect to the image tube screen shall be applied to the cathode.

ii There shall be no radiation incident upon the photocathode.

iii The level of illumination in the vicinity of the test area shall not exceed 0.1 foot candles.

iv (a) All flux levels are to be measured in terms of the luminous flux obtained from the standard tungsten light source operating at the colour temperature given in the following table:

Colour Temperature	Tests
2850°K	t,u
2700 - 2900°K	r
2000 - 3000°K	d,f,g,h,j,k,l,m,s

(b) The standard infra-red filter (see Fig.1) shall be interposed between the light source and the image tube photocathode, sufficiently close to the latter, so that only direct radiation through the filter shall reach the photocathode. Suitable baffles to ensure this shall, if necessary, be provided.

(c) For those tests where the level of filtered radiation incident upon the photocathode is not specified but is left to the discretion of the observer, this shall never exceed 70 lux.

v The observer shall be suitably dark adapted before commencing the test.

vi All tests shall be carried out in an ambient temperature of 20°C ± 5°C.

	Test	Test Conditions	AQL	Insp. Level	Symbol	Limits Min	Limits Max	Units
	During all electrical testing of the image tube with the exception of the shock test there shall be no flickering or any other indication of malfunctioning.							
	Group A							
a	High and low temperature and temperature shock tests	Test conditions i to vi are not applicable Note 1		100%				
b	Vibration	Test conditions i to vi are not applicable Note 2		100%				
c	Shock test	Test condition vi is not applicable Note 3		100%				
d	Irradiation surge	Note 4		100%				
e	Dark current	Note 5		100%		-	0.02	µA
f	Uniformity of image screen brightness	Note 6		100%				
g	Voltage stability	Note 7		100%				
h	Resolution (1) Centre	Note 8		100%		30	-	line -pairs /mm
	(2) Off axis			100%		12	-	line -pairs /mm
j	Spots, Streaks and Blemishes	Note 9		100%				
	Groups B and C	Omitted						
	Group D	Note 10						
k	Alignment of mechanical and optical axes	Note 11	6.5	IC				
l	Centre magnification	Note 12	6.5	IC	M1	0.728	0.772	
m	Distortion	Note 13	6.5	IC	D	5.5	9.5	%

	Test	Test Conditions	AQL	Insp. Level	Symbol	Limits Min	Limits Max	Units
	Group E							
n	Resistance to external pressure	Test Conditions i to vi are not applicable Note 14		QA				
p	Damp heat (long term)	DEF 5011 Class H6 Note 15		QA				
	Group F							
q	Shelf Life	t = 2 years The tube shall be stored in darkness with no voltage applied Note 16		IV of MIL-STD 414				
	End Point Test at each Test Point Conversion Index	As in test t	6.5	IV of MIL-STD 414	C.I	10	-	
r	Operational life	Illumination 18 (± 10%) lux i.r.f. t = 1000 hours continuous Note 17		Note 18				
	End Point Test 500 hours Conversion Index	As in test t Note 18	-		C.I	8.5	-	
	End Point Test 1000 hours Conversion Index	As in test t Note 18	-		C.I	7.5	-	
	Group G 100% Retest							
s	Accelerated ageing	Note 19		100%				
t	Conversion Index	Note 20		100%	C.I	10	-	
u	Background Equivalent Illumination	Note 21		100%	Eo	-	0.025	Lux i.r.f.

NOTES

1. The image tube shall be placed in the test chamber and the internal temperature of the chamber raised gradually, in not less than 30 minutes, to 68°C. After at least 1 hour at this temperature, the temperature of the chamber shall be lowered gradually, in not less than 15 minutes, to 52°C and held there for a further 1 hour. The image tube shall then be removed from the chamber and immediately placed at room temperature for at least 1 hour. Upon completion of this test, the image tube shall be visually examined. There shall be no deformation, cracking or fracture of any part.

   Image tubes which have successfully passed this test shall be replaced in the test chamber and the temperature lowered gradually, in not less than 30 minutes, from room temperature to -54°C. The chamber shall remain at this temperature for at least 1 hour and thereafter shall be raised gradually, in not less than 15 minutes, to -32°C where it shall be held for at least 1 hour. The image tube shall then be immediately removed to room temperature and after not less than a further 1 hour the image tube shall be examined again. There shall be no deformation, cracking or fracture of any part.

2. The image tube shall be rigidly mounted with its photocathode downwards in a jig of an approved design and the complete assembly shall be vibrated along the longitudinal axis of the tube with an acceleration of not less than 6g. The vibration shall be sinusoidal, having a harmonic distortion content not exceeding 5%, at any single nominal frequency between 25 and 30 c/s and be applied for a period of not less than 2½ minutes duration. The image tube shall then be removed from its holder and visually examined. There shall be no loose elements or particles.

3. The image tube shall be rigidly mounted in a holder of an approved design and subjected to shock impacts of peak value 75g. The waveform of the impact shock shall be substantially rectilinear and the time duration for which the peak shock value is maintained shall be at least 5 milliseconds. The duration of the impact excluding any overshoot which may occur shall be 8 ± 3 milliseconds. Any overshoot which occurs during the decay period of the shock shall be damped and shall not exceed 25% of the peak value. This test shall be performed six times with the shock impact applied along the longitudinal axis of the image tube and six times perpendicular to this same axis. During these tests, the observer shall view the image tube with the unaided eye. There shall be no signs of instability or flashing on more than two of the impacts during each series of six shocks. There shall be no signs of instability or flashing after coming to rest after each impact.

4. This is a conditioning test only. The image tube cathode shall be subjected to the sudden application of radiation produced by filtering 2.0 lumens of luminous flux (7000 lux). This radiation shall be incident over a circular area of 0.75 inch diameter centred on the photocathode for a period of 1 ± 0.5 sec. The total source impedance of the power supply shall be 2 kM ohms ± 10%.

5. Dark current is defined as that electrical current which flows within the image tube and across the external surfaces of the image tube with no radiation incident on the photocathode.

6. A filtered luminous flux level of 100 microlumens (0.35 lux) shall be incident on the photocathode. The whole of the image screen shall be viewed through a nominal 2.5 power magnifier for evidence of non-uniform screen brightness. There shall be no line of demarcation if any variation of brightness exists, nor shall there be a mottled or water mark appearance.

7. A voltage of 13.0 kV shall be applied to the image tube for a period of not less than 1 minute. During this test the image screen shall be observed through a nominal 10 power magnifier. There shall be no arcing, flashing, flickering or any other indication of malfunctioning.

8. This test shall be performed using a 10 power magnifier.

The test chart shown in Figure 2 of this specification shall be projected on to the photocathode using an optical system such as shall not detract from the resolution capability of the image tube or of the observer. The optical system shall comprise a light source, condenser lens assembly with the test chart in close proximity to it, a high quality projection lens and the standard infra-red filter. The test chart shall be placed so that the outer circle A is concentric with the tube axis.

Using a convenient level of filtered radiation the longitudinal position of the image tube shall be adjusted to present the best simultaneous resolution of the four test patterns in the centre of the test chart. Without further adjustments, the resolution of the image tube shall be such that all the patterns on the test chart are resolved.

9. (a) The image tube screen shall be examined with a 2.5 power magnifier. There shall be no bright spots, streaks or other configuration of greater intensity than the background brightness of the image screen.

(b) With a convenient level of filtered radiation incident upon the image tube photocathode, the image screen shall be viewed through a 2.5 power magnifier. There shall be no ion spots.

(c) The image tube, without the operating voltage applied to it shall be held vertically with its photocathode downwards and it shall be tapped in such a way as to cause any loose particles which may be present inside the tube to fall towards the photocathode.

With the operating voltage restored to the image tube the useful image screen shall then be examined with a 10 power magnifier. The photocathode shall be illuminated through a lens at an aperture of f2.8 to give a nominal 0.02 lumen (70 lux) filtered on the cathode. The screen shall be examined for spots. The aperture of the lens shall then be reduced to f11 and the number of grey and dark spots shall be assessed. Differentiation between cathode and screen spots shall be made and the number of cathode spots of size not less than 0.002 inch shall not exceed 10 and none shall exceed 0.006 inch. No spots present shall exceed 0.012 inch and otherwise shall not exceed the size and quantities in all three categories shown below. Spot size is defined as the maximum dimension.

Spot size (inches)	Number of spots within 0.4 inch diameter circle*	Number of spots within area bounded by two circles* of diameter 0.4 inch and 0.75 inch
0.009 to 0.012	0	2
0.006 to 0.012	0	12
0.002 to 0.012	10 minus the total number of photocathode spots as defined above	22

*Circles on planar space image at the photocathode concentric with the tube axis.

10. The tests in this group may be performed after the Group G tests if desired.

11. A perspex disc with two lines perpendicular to one another engraved across its diameter shall be located accurately inside the photocathode bearing surface and against the photocathode window (see dimensional outline drawing page 13). A similar disc but having a circle of 0.045 inch radius engraved upon it concentric with the centre of the disc shall be accurately located against the image tube screen. With a conventional level of filtered radiation incident upon the photocathode, the image screen shall be observed using a 10 power magnifier.

The projection of the point of intersection of the photocathode cross-wires on the screen shall be within the prescribed circle at the screen.

12. A test pattern slide containing two parallel lines shall be projected so that their separation on the planar space image at the photocathode is 0.150 ± 0.002 inch. The two parallel lines shall be bisected by a diameter of the photocathode and shall be equi-distant from the tube axis.

Using a convenient level of filtered radiation, the separation of the two lines appearing on the image screen shall be measured with a 10 power magnifier having a calibrated graticule.

The centre magnification M_1 of the image tube is defined as the ratio of the separation of the two lines on the image screen to the separation of the two corresponding lines on the photocathode.

13. A test pattern slide containing two parallel lines shall be projected such that their separation on the planar space image at the photocathode is 0.60 ± 0.002 inch. The two parallel lines shall be bisected by a diameter of the photocathode and shall be equi-distant from the tube axis.

Using a convenient level of filtered radiation, the separation of the two lines appearing on the image screen shall be measured with a 10 power magnifier having a calibrated graticule.

The outer magnification M_2 of the image tube is defined as the ratio of the separation of the two lines on the image screen to the separation of the two corresponding lines on the photocathode.

The percentage distortion of the image tube shall be determined from the following formula:

$$D = \frac{(M_2 - M_1)}{(M_1)} \times 100$$

where D = percentage distortion

M_1 = centre magnification (obtained in test 1)

M_2 = outer magnification

14. The image tube shall be subjected to the application of an external pressure of 30 lb. per square inch above atmospheric pressure for not less than 1 minute. There shall be no deformation, cracking or fracture of any part.

15. Devices used for this test may be either dummy image tubes or selected from those which have failed any electrical test. Upon completion of this test surface moisture shall be removed by shaking and the image tube shall be visually examined. There shall be no signs of deterioration in the varnish.

16. This test is to be performed as follows:-

(a) A random sample is to be drawn from the lot upon release by the manufacturer's inspection organisation at the completion of all other tests (except life test) in accordance with the provisions of MIL-STD-414, Sampling Procedures and Tables for Inspection by Variables for Percent Defective, Section B (Variability Unknown, Standard Deviation Method, Form 2) using Normal Inspection.

(b) This sample shall be retained in bonded storage at the manufacturer's premises while the remainder of the lot is delivered.

(c) The storage period shall continue until two years after the last day of the month in which the lot was released by the manufacturer's inspection organisation, or until all or part of a lot is embodied into equipment or until the lot is dispersed, whichever occurs earliest.

(d) The sample is to be assessed to the end point test during the storage period at intervals of four calendar months from the last day of the month in which the lot was released by the manufacturer's inspection organisation.

(e) At each assessment, acceptability to the end point test shall be as specified in clause B6 of MIL-STD-414.

(f) The action required in the event of the lot being deemed non-acceptable at any of the four-monthly assessments given in (d) above, shall be as defined in the contract with the manufacturer.

(g) At the end of the storage period, the sample tubes held by the manufacturer shall be delivered.

17. The life test sample shall consist of not less than seven tubes per month and shall be selected randomly from tubes which have satisfied the requirements of the Group A tests.

18. This life test shall be conducted for 1000 hours and acceptance shall be on the basis of the 500 hour and 1000 hour requirements. At the end of these periods the sample shall pass the post test end point limits and electrical inoperatives shall be the criterion of failure.

The life test shall be assessed at each end point test time by calculating the average life expectancy of the sample by the methods described below. This is a destructive test.

(a) If a tube satisfies the end point test requirements up to and including the time of the end point test which is being considered, it shall be credited with a life equal to the duration of the test to that end point test time.

(b) If the time of failure to satisfy the end point test requirements is known exactly, it shall be credited with a life equal to the number of hours on life completed before failure.

(c) If the time of failure to satisfy the end point test requirement is not known exactly, the tube shall be credited with a life computed as follows:

Estimate the time at which the conversion index was equal to the end point test limit by linear interpolation on a conversion index/time diagram between the conversion index at the last successful reading and the conversion index at the first unsuccessful reading.

The average life of the sample shall be the average of the hours credited to the individual tubes in the sample. The total number of tubes placed on life test from the lot shall be considered the life test sample, but at the discretion of the Inspection Authority, any tube whose failure is due to test equipment failure or operator error, shall not be considered in the calculation of the average. The average life expectancy of the sample shall not be less than 80% of the time to the end point test.

In the event that a life test sample fails, a lot may be re-assessed by drawing a further random sample of not less than seven tubes from the lot, repeating the life test and then calculating the average life on the combined sample. The lot shall be rejected if the average life expectancy is less than 80%.

19. The image tube shall be conditioned by subjecting the photocathode to a filtered luminous flux of 0.02 lumen (70 lux) for 5 hours. During this period an operating voltage of 12 kV shall be applied to the image tube. The image tube shall then be stored, in the dark, and without further processing, for at least 4 weeks, after which period the measurement of conversion index shall be made in the manner described in Note 20.

20. Conversion index is defined as the ratio of luminous flux emitted by the image tube screen to the infra-red flux incident on the photocathode.

$$\text{i.e.} \quad C.I. = \frac{Fe}{Fi.T}$$

where Fe = luminous flux emitted by the phosphor in lumens

Fi = unfiltered luminous flux incident on the photocathode in lumens

T = filter factor

Conversion index shall be measured with a filtered luminous flux of approximately 0.02 lumens incident upon a circular area of 12.7 mm. diameter centred on the photocathode. The luminous flux emitted by the image tube screen shall be measured with a photovoltaic cell having a response approximating to the C.I.E. average photopic eye. The cell shall be fitted with a truncated perspex cone. The cone shall be 39.7 mm. in diameter at its base, 28.6 mm. in diameter at the top and 42.9 mm. in height, and the base of the cone shall be in intimate contact with the cell window. In use, the top of the cone shall be pressed against the image tube screen and the current generated by the photovoltaic cell shall be measured.

The photovoltaic cell (without perspex cone) is calibrated against a tungsten lamp of accurately known luminous intensity running at Tc = 2850°K. The external impedance of the photovoltaic cell shall be 100 ohms or less. The measurement gives the cell sensitivity in terms of μA/lux.

An image converter tube is used for the calibration of the combination of cell and cone as follows: The tube is run with constant anode voltage at a high screen luminance output level under the conditions stated above, viz. with constant input illumination incident on a 12.7 mm. diameter circular area centred on the photocathode. The luminous intensity of the screen is measured by applying the inverse square law with the calibrated cell (without cone) at a distance $D \geqslant 10d$ from the screen, where d is the diameter of the illuminated screen area. The total luminous flux emitted by the illuminated portion of the tube screen is then known.

The combination of cell and cone is placed against the screen and a figure - obtained for the sensitivity of the combination of cell and cone in terms of μA/lm.

The conversion index of the image tube shall then be determined from the formula given above.

21. This test shall be performed at an ambient temperature of $20 \pm {}^{1}_{0}$°C in a darkened enclosure from which all extraneous sources of illumination have been removed. The manufacturer may, at his discretion, perform the test at a higher ambient temperature (up to a maximum of 25°C) but the specified limit shall apply whether or not this concession is used.

A filtered illumination level, Ei, having an accurately known value of the order of 1 lux, shall be incident upon a circular area of 12.7 mm. diameter centred on the photocathode. By means of a diaphragm in close proximity to the image tube screen, the emitted radiation from the phosphor over a circular area of 6 mm. diameter around the centre of the screen, shall be received by the cathode of a photomultiplier tube.

The photomultiplier tube shall be of the end window type, and shall have a spectral response similar to that of the EMI type 9536B. The cathode of the photomultiplier tube shall be at a fixed distance (of the order of 30 mm) from the tube screen. The sensitivity of the photomultiplier tube shall be adjusted by varying the H.T. voltage to its dynode resistance network until a convenient value of photomultiplier tube anode current (Ia) is obtained. This value shall be chosen well within the linear portion of the photomultiplier characteristic. The radiation incident upon the image tube photocathode shall then be excluded and the remaining multiplier anode current (I_B) measured.

The background equivalent illumination (Eo) is then $\frac{I_B}{Ia} \times Ei$

where I_B and Ia are in microamperes and Eo and Ei are in lux i.r.f.
For negligible error (less than 10%) in determining the degree of background equivalent illumination, the photomultiplier dark current should be less than one thirtieth of I_B.

TABULATION OF DIMENSIONS (INCHES)													
	A	B	C	D	H	J	M	N	Q	R	U	V	X
MAX	2·335	1·315	2·035	1·375	·410	·200	—	—	1·215	·771	·125	1·315	·200
MIN	2·235	—	1·965	1·325	·360	·140	·630	·750	1·205	·711	·065	—	·140

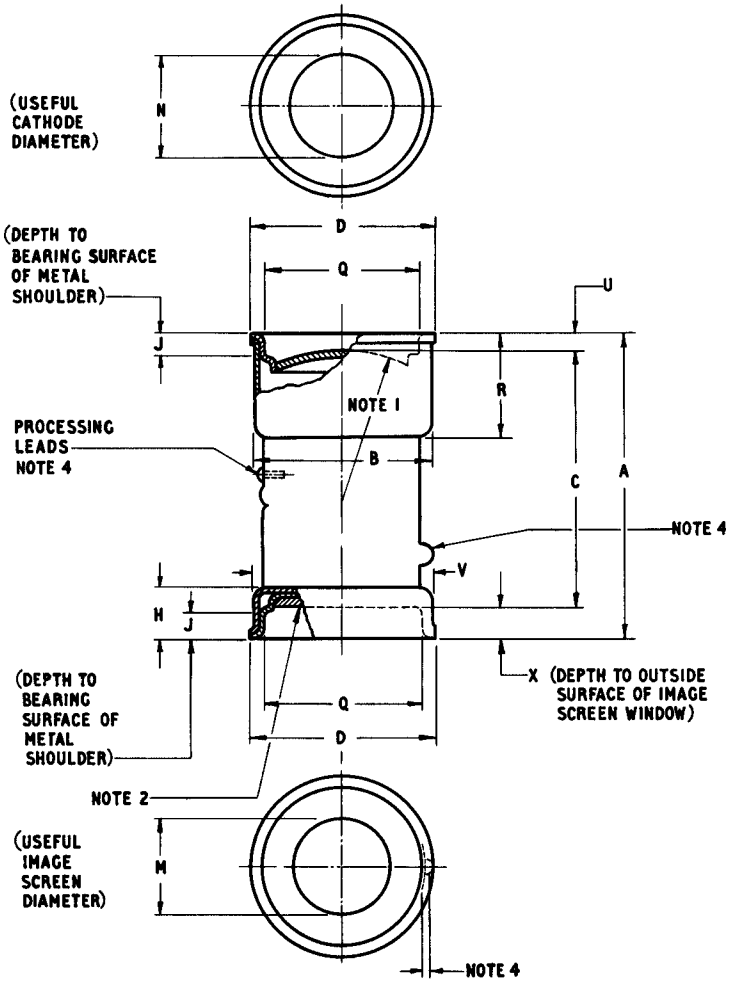

INFRARED IMAGE CONVERTER TUBE.

NOTES

1 FACEPLATE DIMENSIONS ✳
RADIUS OF CURVATURE 1·230"±·02" (INSIDE)
CENTRE FACEPLATE THICKNESS ·060" ± ·004"
MAX. VARIATION IN EDGE THICKNESS ·004"

2. IMAGE SCREEN DIMENSIONS. ✳
THICKNESS ·075" TO ·085" AT CENTRE
MAX. VARIATION IN EDGE THICKNESS ·005"

✳3. INDEX OF REFRACTION FOR FACEPLATE AND IMAGE SCREEN GLASS SHALL BE 1·49 ± ·04

4. NO PART OF THAT PORTION OF THE TUBE BETWEEN THE METAL CONTACT RINGS SHALL PROTRUDE BEYOND THE ⌀ DIA. (DIMENSION "D") OF THE INDIVIDUAL TUBE.

✳5 TUBE AXIS IS ESTABLISHED BY THE CENTRELINE OF THE "Q" DIMENSIONS AT END OF TUBE

6 THE FOLLOWING DIMENSIONS ONLY SHALL BE INSPECTED FOR ACCEPTANCE PURPOSES:-
C, D, Q, U, X AND THE EXTERNAL RADIUS OF CURVATURE OF THE CATHODE FACEPLATE (1·230" ± 0·02"). THE EXTERNAL RADIUS OF CURVATURE OF THE PHOTOCATHODE SHALL BE MAINTAINED OVER A DIAMETER OF 0·75" MIN. THE EXTERNAL FACE OF THE IMAGE SCREEN SHALL BE MAINTAINED "FLAT" OVER A DIAMETER OF 0·63" MIN. CONCENTRIC WITH THE TUBE AXIS. "FLAT" MEANS THAT THE SURFACE OF THE AREA DEFINED ABOVE SHALL BE WITHIN A TOLERANCE ZONE OF 0·010".

✳7 THE PHOTOCATHODE SHALL BE OF CAESIUM SILVER OXIDE

✳8. THE IMAGE SCREEN SHALL BE ALUMINIUM BACKED WITH A GGS RESPONSE

✳9. ALL EXPOSED METAL SHALL BE NICKEL PLATED.

✳10. ALL METAL PROCESSING TERMINALS PROTRUDING THROUGH THE GLASS ENVELOPE SHALL BE CUT OFF AND GROUND FLUSH WITH THE GLASS BEAD. THE METAL PROCESSING TERMINALS SHALL BE COATED WITH GLYPTOL OR EQUIVALENT THE RETURN LEAD USED FOR PROCESSING IS DIAMETRICALLY OPPOSITE EXHAUST TUBING.

✳11 2 COATS OF AN APPROVED NON-HYGROSCOPIC, TRANSPARENT, VARNISH SHALL BE APPLIED TO THE EXPOSED GLASS SURFACES OF THE TUBE WITH THE EXCEPTION OF THE PHOTOCATHODE AND IMAGE SCREEN FACEPLATES (THE STERLING VARNISH COMPANY'S V130/1 MEETS THESE REQUIREMENTS AND IS APPROVED FOR USE ON THIS TUBE.)

✳ NOT FOR INSPECTION PURPOSES. WHERE DIMENSIONS ARE SHOWN THESE ARE FOR GUIDANCE ON COMPONENT PARTS

CHARACTERISTIC OF FILTER CS94 (CORNING NO 2540, MELT 1613, 2·62 mm THICKNESS)

THE SPECTRAL RESPONSE AND THE FILTER FACTOR OF THIS FILTER ARE PROVISIONAL AND WILL BE SUBJECT TO MODIFICATION.

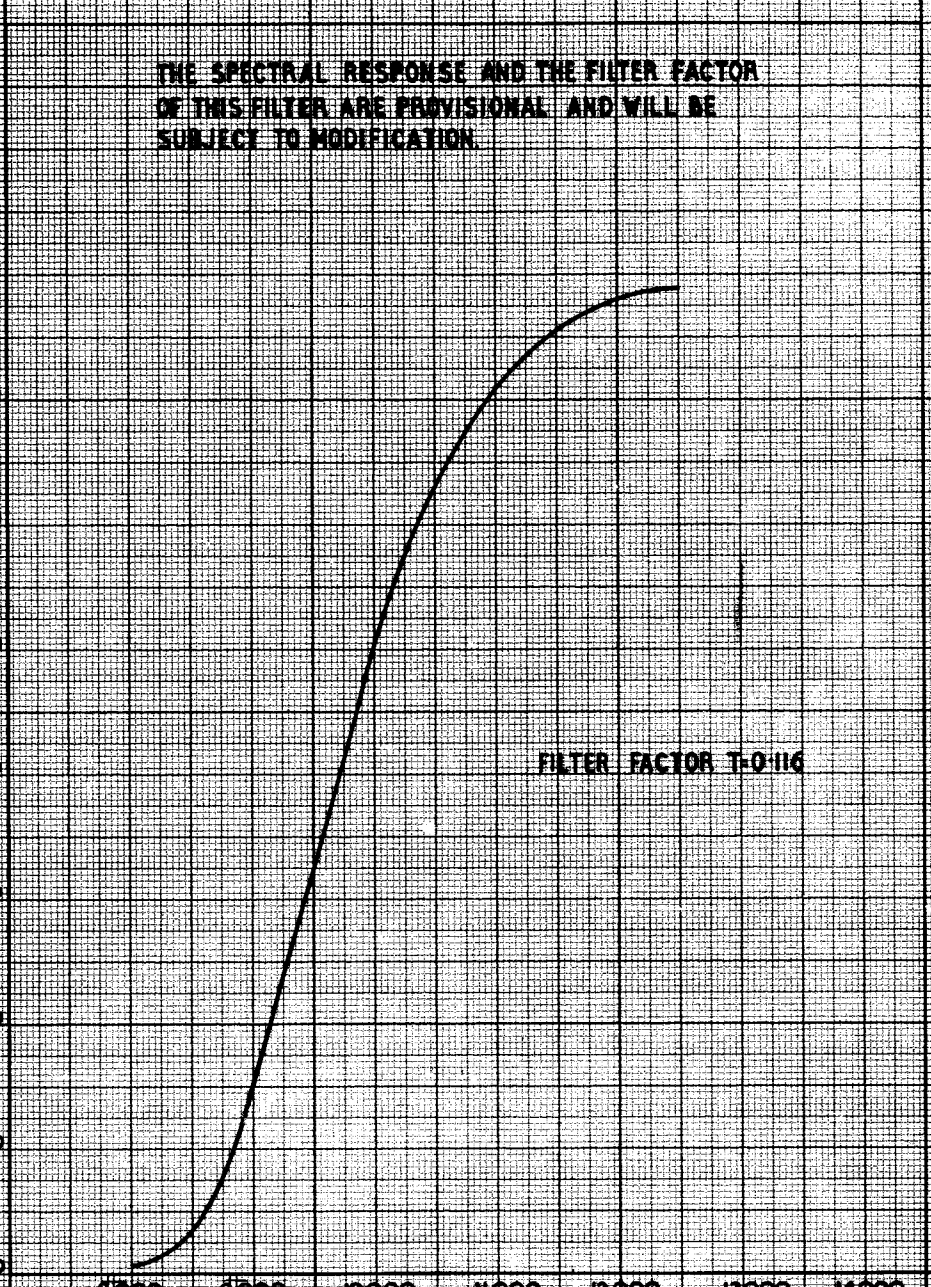

FIG 1.

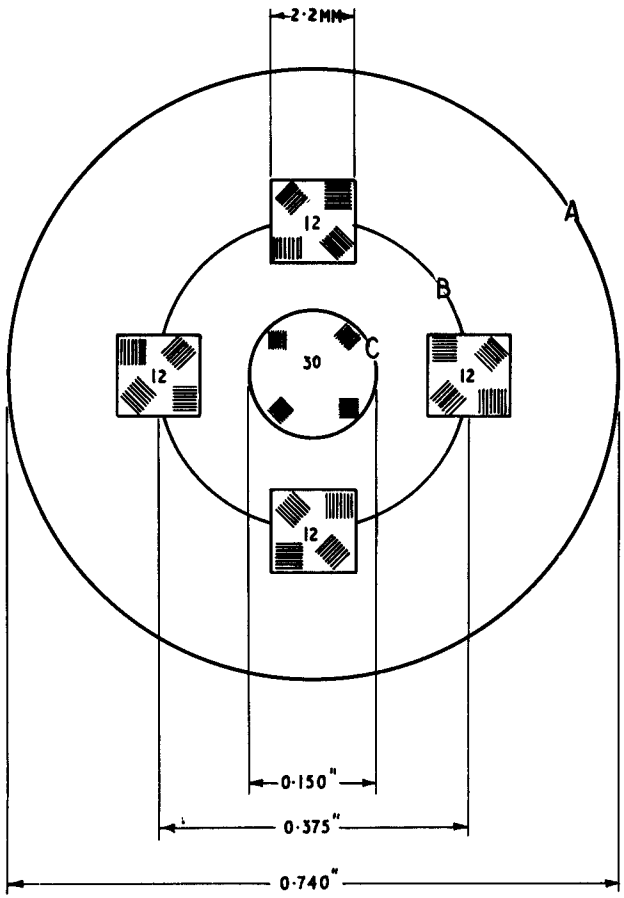

FIG. 2. RESOLUTION CHART. (NOT TO SCALE)

NOTES.

1 EACH TEST PATTERN SHALL CONSIST OF 8 BLACK LINES WITH A LINE TO SPACE RATIO OF 1:1. THE BLACK LINES SHALL BE ON A BACKGROUND WITH CONTRAST AS HIGH AS POSSIBLE.

2 THE LENGTH TO BREADTH RATIO OF EACH LINE SHALL BE 15:1

3 THE ORIENTATION OF EACH PATTERN SHALL BE DISPLACED FROM THE ORIENTATION OF AN ADJACENT PATTERN BY 45°

4 THE DIMENSIONS SHOWN ON THIS DRAWING SHALL BE THOSE OF THE PLANAR SPACE IMAGE AT THE PHOTO-CATHODE.

5 IN CIRCLE B THE OVERALL SIZE OF EACH PATTERN SHALL BE SUCH AS TO SUBTEND 12 LINE PAIRS/MM AT THE PHOTO-CATHODE. (ONE LINE PAIR IS EQUAL TO THE COMBINED WIDTH OF ONE BLACK LINE AND ONE SPACE). EACH BOX SHALL CONTAIN FOUR PATTERNS AND THE FOUR BOXES SHALL BE EQUALLY SPACED ON THE CIRCUMFERENCE OF THE CIRCLE.

6 IN CIRCLE C THE OVERALL SIZE OF EACH PATTERN SHALL BE SUCH AS TO SUBTEND 25 LINE PAIRS/MM AT THE PHOTO-CATHODE. THE FOUR TEST PATTERNS SHALL BE EQUALLY SPACED NEAR THE CIRCUMFERENCE OF THE CIRCLE.

VALVE ELECTRONIC

CV6100

UNITED KINGDOM ATOMIC ENERGY AUTHORITY (A.E.R.E.)

Specification D. At. En./CV.6100/Issue 1

Dated 18th January, 1962.

To be read in conjunction with K.1001

SECURITY	
Specification	Valve
Unclassified	Unclassified

TYPE OF VALVE: Decade Scaling Tube
CATHODES: Cold
ENVELOPES: Glass Unmetallised
PROTOTYPE: VX.9194/4

MARKING
See K1001/4

BASE
International Octal

RATING	Rectangular Pulse Drive	Sine Wave Drive	Notes
Max. Striking Voltage (V)	350	350	
Nominal Maintaining voltage at .45 mA (V)	190	190	
Max. Anode Current (μA)	550	550	
Min. Anode Current (μA)	250	250	
Max. Speed (Digits/sec)	4,000	2,000	
Max. Input Signal Peak to Peak (V)	140	171	
Max. Guide Bias (V)	60		1,3
Max. Output Cathode Bias (V)	-20		1
Max. Output Cathode Load (KΩ)	100		
Max. Guide Bias Resistance (KΩ)	220		
RECOMMENDED OPERATION			
Supply Voltage (V)	400	400	1
Anode Resistor (KΩ)	470	470	
Signal Amplitude Both Guides (V)	120	55	2
Pulse Duration Both Guides (μS)	80		
Signal Delay,2nd Guide (μS)	80		
Signal Delay,2nd Guide (degrees)		45	
Bias Voltage Both Guides (V)	35	9	1,3
Output Cathode Bias Voltage (V)	-10	-10	1
Output Cathode Load (KΩ)	33	33	

CONNECTIONS

Pin	Electrode
1	K_M
2	K_D
3	1st Guides
4	Anode
5	2nd Guides
6	K_A
7	K_B
8	K_G

DIMENSIONS

See Fig. 1 Page 4

NOTES

1. Relative to the other cathode electrodes.
2. Signal for sine wave drive specified in V.R.M.S.
3. With rectangular pulse drive at high speeds this guide bias must be maintained, e.g. by D.C. restoration.

To be performed in addition to those applicable in K1001

	Test	Test Conditions	AQL %	Insp. Level	Symbol	Limits Min.	Limits Max.	Units	Notes
	GROUP A								
	Acceptance Tests								
a	Insulation	To be measured between any one electrode and parallel combination of all the others at 170V.		100%		100		MΩ	1
b	Striking Voltage	A = K_B V_b = 350V		100%	V_s				1, 3
c	Scaling Accuracy	V_b = 400V V_1 = +35V V_2 = -40V T = 60μS. Frequency = 4.0 Kc/s.		100%					2
d	Running Voltage	V_b = 400V		100%	V_r	184	194	V	1, 4
	GROUP B								
	Life Test	Combined AQL	1.5	IC					
a	Survival running life test. Tests to be performed at end of survival running test.	V_b = 500V V_1 = +35V V_2 = -40V T = 60μS							5
b	Scaling Accuracy	V_b = 400V V_1 = +35V V_2 = -40V T = 60μS Frequency = 4.0 Kc/s.							2
c	Running Voltage	V_b = 400V			V_r	176	206	V	4

	Test	Test Conditions	AQL %	Insp. Level	Symbol	Limits Min.	Limits Max.	Units	Notes
	GROUP C								
	Electrical Retest Not more than 7 days prior to application for Services final approval								6
a	Scaling Accuracy	$V_b = 400V$ $V_1 = +35V$ $V_2 = -40V$ $T = 60\mu S$ Frequency = 4.0 Kc/s		100%					2
b	Running Voltage	$V_b = 400V$		100%	V_r	184	194		4

NOTES

1. Tests of Group A are to be applied directly after completion of manufacture.

2. The tube shall scale without error the first applications of test signals (illustrated in fig.4 on page 4). Test signals are to be applied for at least 1/10th second. The test circuit of fig.3 page 4 is applicable.

3. Other cathodes 1st guide and 2nd guide electrodes to be disconnected. Illuminations of valve to be 5 - 50 lumens per square foot. Valve to conduct in less than 10 seconds.

4. The other cathodes 1st guide and 2nd guide electrodes will be successively earthed through a suitable make before break type switch to cause 30 gaps to conduct in turn. The running voltage across each gap shall be within the specified limits. For this test the output cathode and other cathode electrodes will be commoned. The test circuit to fig.2 page 4 is applicable. The measurement of the running volts is to be made between 0.1 and 2.0 seconds after the contacts of the make before break type switch have broken.

5. The valves selected for this test are to be run in the circuit shown in fig.5 page 4. One application of the pulses shown in fig.4 page 4 is to be made every 85 ± 5 hours. The tube is to receive 20 such pulses and then be removed. A valve which fails to step on the application of the test pulses shall be rejected. The normal guide bias is to be +60V which will be reduced to +35V immediately prior to the application of pulses.

6. During the period between the completion of Group A tests and the commencement of Group C tests no further processing shall be applied.

FIG. 1

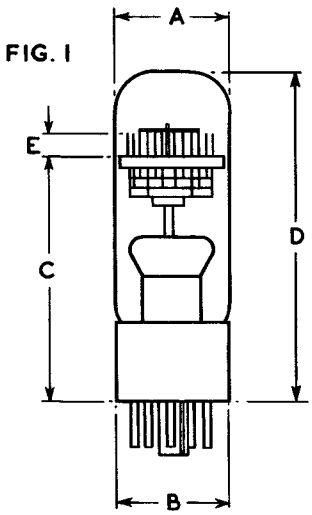

DIMENSIONS

DIMENSION	A	B	C	D
Min. (mms)	27·5	28	64	82·5
Max. (mms)	29·5	29·9	69	87·5

MAXIMUM ECCENTRICITY RADIUS 15·75mms

DIMENSION E WHICH WILL NORMALLY BE 6·0 ± 0·5mm., IS DETERMINED BY THE ASSEMBLY JIGS. FACILITIES MUST BE AVAILABLE FOR THESE JIGS TO BE CHECKED BY THE INSPECTING AUTHORITY AT WEEKLY INTERVALS

FIG. 2

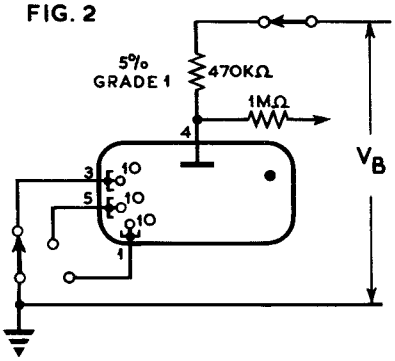

FIG. 3

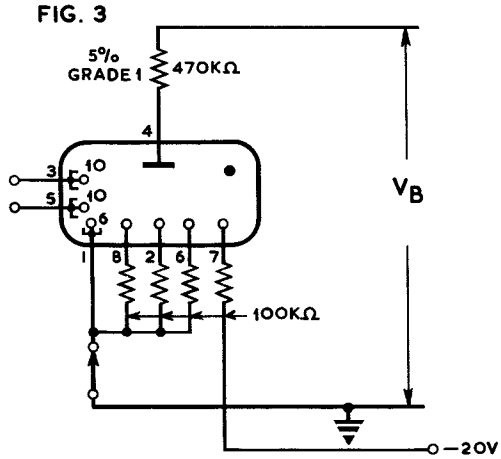

FIG. 4

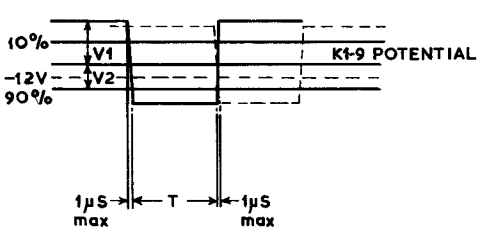

FIG. 5

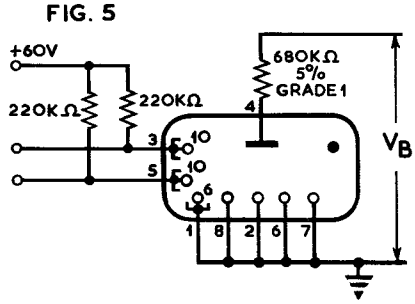

VALVE ELECTRONIC

CV6103

UNITED KINGDOM ATOMIC ENERGY AUTHORITY (A.E.R.E.)

Specification D.At.En./CV 6103 Issue 1	SECURITY	
Dated 13th February, 1962.	Specification	Tube
To be read in conjunction with K1C01	Unclassified	Unclassified

TYPE OF VALVE - Radial Beam Switching Tube. Permanent Magnet, High Vacuum, Ten Outputs.
CATHODE - Indirectly heated.
ENVELOPE - Glass, unmetallised.
PROTOTYPE - VX.9210.

MARKING

SEE K1001/4.

BASE

B26A

RATING			Notes
Heater Voltage	(V)	6.3	
Heater Current	(A)	0.50	
Max.spade to cathode voltage (Vs max.)	(V)	145	
Min.spade to cathode voltage (Vs min.)	(V)	80	
Max.target to cathode voltage (V_T max.)	(V)	300	
Min.target to cathode voltage (V_T min.)	(V)	50	
Min.switching grid to cathode voltage (V_{SG} min.)			
V_s 140V	(V)	80	
V_s 125V	(V)	65	
V_s 100V	(V)	50	
V_s 80V	(V)	40	
Min.spade resistance (R_s min.)			1
V_s 100V	(kΩ)	75	
Max.spade resistance (R_s max.)			
V_s 100V	(kΩ)	220	
Min.input pulse duration	(μS)	0.25	2
RECOMMENDED OPERATION			3
Spade to cathode voltage	(V)	100	
Spade resistance	(kΩ)	100	4
Target to cathode voltage	(V)	100	
Target Resistor	(kΩ)	4.7	5
Switching grid to cathode voltage	(V)	50	
Switching grid to cathode voltage pulse amplitude	(V)	-55	
Pulse duration	(μS)	0.25	

CONNECTIONS

Pin	Electrode	Pin	Electrode
1	Spade 0	14	Spade 2
2	Target 9	15	Target 1
3	Target 8	16	Even Switching Grid
4	Odd Switching Grid		
5	Target 7	17	Target 0
6	Spade 7	19	Spade 9
7	Target 6	20	Spade 8
8	Target 5	21	Heater
9	Spade 5	22	Spade 6
10	Target 4	23	Spade 4
11	Do not connect	24	Spade 3
		25	Heater
12	Target 3	26	Spade 1
13	Target 2	27	Cathode

DIMENSIONS

See Fig.1

DIMENSION	Max. (mms.)
A. Seated Height	81.5
B. Overall Dia.	44

MOUNTING POSITION

Any: providing that the tube is kept at least 2" from any magnetic material or 4" from a similar tube, a strong magnet, or a mu-metal screen.

NOTES

(1). The spade resistance is the total resistance, including resistors for beam formation, etc.
(2). Pulse amplitude should be sufficient to bring the switching grid potential to 5V below the cathode voltage. Pulse shape as in Fig.2.
(3). The recommended operating circuit is shown in Fig.3.
(4). Stray capacities must be kept to a minimum and for operation at high speed, each spade must be connected to a separate load resistor with not more than $\frac{1}{2}$" of connecting lead.
(5). Any number of target connections may be taken to a common target resistor.

TESTS

To be performed in addition to those applicable in K1001

Test	Test Conditions	A.Q.L. %	Insp. Level	Symbol	Limits Min.	Limits Max.	Units	Notes
Group A Acceptance Tests								
(a) Insulation	To be measured between heater and cathode. V_h = 150V. V_k = 0V		100%		5		MΩ	1
(b) Insulation	To be measured between cathode and heater. V_k = 150V. V_h = 0V		100%		5		MΩ	1
(C) Insulation	To be measured between any one electrode and parallel combination of all the others (Heater excluded) at 300V.		100%		50		MΩ	
(d) Heater Current	V_h = 6.3V		100%	Ih	.45	.55	Amp.	1
(e) Cut-off	V_b = 150V To be applied between all electrodes (heater excluded) and the cathode.		100%			75	μA	1
(f) Target Current	To be measured as shown in circuit in Fig.4a. $V_T = V_{SG}$ = 80V V_S = 140V Pulse frequency = 10kc/S		100%	I_T	15.0	18.0	mA	1
(g) Target Current	To be measured as shown in circuit in Fig.4a. $V_T = V_{SG}$ = 50V V_S = 100V Pulse frequency = 10kc/S		100%	I_T	6.5	9.0	mA	1
(h) Cathode Current	To be measured as shown in circuit in Fig.4a. $V_T = V_{SG}$ = 80V V_S = 140V Pulse frequency = 10kc/S		100%	I_K	16.0	20.0	mA	

Test	Test Conditions A.Q.L. %	Insp. Level	Symbol	Limits Min.	Limits Max.	Units	Notes
Group A Acceptance Tests - continued -							
(j) Cathode Current	To be measured as shown in circuit in Fig.4a. $V_T = V_{SG} = 50V$ $V_S = 100V$ Pulse frequency = 10kc/S	100%	I_K	7.0	10.0	mA	
(k) Noise	To be measured using the circuit shown in Fig.4a. $V_T = V_s = 100V$ $V_{SG} = 50V$	100%			0.75	V(pk-pk)	1,2 3.
(l) Speed	The tube shall count without error when tested in the circuit shown in Fig.4a. Frequency = 10kc/S $V_T = V_{SG} = 50V$ $V_s = 100V$	100%					1
(m) Speed	The tube shall count without error when tested in the circuit shown in Fig.4a. Frequency = 1Mc/S $V_T = V_{SG} = 50V$ $V_s = 100V$	100%					1
(n) Speed	The tube shall count without error when tested in the circuit shown in Fig.4a. Frequency = 2Mc/S $V_T = V_{SG} = 50V$ $V_s = 100V$	100%					1
(p) $\frac{1}{4}$ µ/s pulse slow speed	The tube shall count without error when tested as described in Fig.5. $V_T = V_s = 125V$ $V_{SG} = 65V$	100%					1

Test	Test Conditions	A.Q.L. %	Insp. Level	Symbol	Limits Min.	Limits Max.	Units	Notes
Group B Life Test								
(a) Regular running life test I.	Heater only							
Regular Running life test II	$V_T = V_s = 140V$ $V_{SG} = 70V$	Combined A.Q.L.		IC				4
Regular running life test III	$V_T = V_s = 100V$ $V_{SG} = 50V$ $\frac{1}{4}$ μ/s slow speed)	10%						5
Tests to be performed End Point = 1,000 hours.								
(b) Insulation	To be measured between heater and cathode Vh = 150V Vk = 0V		100%		4		MΩ	1
(c) Insulation	To be measured between cathode and heater Vk = 150V Vh = 0V		100%		4		MΩ	1
(d) Insulation	To be measured between one electrode and parallel combination of all the others (heater excluded) at 300V		100%		40		MΩ	
(e) Leakage Test	The tube shall count without error when tested in the circuit shown in Fig. 4b. $V_T = V_s = 100V$ $V_{SG} = 50V$ Pulse Freq. = 10 Kc/S.		100%					
(f) Heater Current	$V_h = 6.3V$		100%	I_h	.475	.525	Amp.	1
(g) Cut-off	$V_b = 150V$ To be applied between all electrodes (heater excluded) and the cathode.		100%			100	μA	1
(h) Target Current	To be measured as shown in circuit in Fig. 4a. $V_T = V_{SG} = 70V$ $V_s = 140V$ Pulse frequency = 10 kc/S		100%	I_T	14.0	19.0	mA	1

CV6103

Test	Test Conditions	A.Q.L. %	Insp. Level	Symbol	Limits Min.	Limits Max.	Units	Notes
Group B Life Test (Cont'd)								
(j) Target Current	To be measured shown in circuit in Fig. 4a. $V_T = V_{SG} = 50V$ $V_s = 100V$		100%	I_T	6.0	9.0	mA	1
(k) Cathode Current	To be measured using the circuit shown in Fig. 4a. $V_T = V_{SG} = 70V$ $V_s = 140V$ Frequency = 10 kc/s		100%	I_K	14.0	18.0	mA	1
(l) Cathode Current	To be measured using the circuit shown in Fig. 4a. $V_T = V_{SG} = 50V$ $V_s = 100V$ Frequency = 10 Kc/s.		100%	I_K	6.0	10.0	mA	1
(m) Noise	To be measured using the circuit shown in Fig. 4a. $V_T = V_s = 100V$ $V_{SG} = 50V$		100%			0.75	V(pk-pk)	1,2 3.
(n) Speed	The tube shall count without error when tested in the circuit shown in Fig. 4a. $V_T = V_{SG} = 50V$ $V_s = 100V$ Frequency = 10 kc/s		100%					1
(p) Speed	The tube shall count without error when tested in the circuit shown in Fig. 4a. $V_T = V_{SG} = 50V$ $V_s = 100V$ Frequency = 1 Mc/S		100%					1
(q) Speed	The tube shall count without error when tested in the circuit shown in Fig. 4a. $V_T = V_{SG} = 50V$ $V_s = 100V$ Frequency = 2 Mc/S		100%					1

Test	Test Conditions	A.Q.L. %	Insp. Level	Symbol	Limits Min.	Limits Max.	Units	Notes
Group B Life Test (Cont'd)								
(r) $\frac{1}{4}$ μ/S pulse slow speed.	The tube shall count without error when tested as described in Fig. 5. $V_T = V_s = 125V$ $V_{SG} = 65V$		100%					1
(s) Leakage Test	The tube shall count without error when tested in circuit shown in Fig. 4b.		100%					
Group C Tests to be performed after 28 days								
(a) Cut-off	$V_B = 150V$ To be applied between all electrodes (heater excluded) and the cathode.		100%			75	μA	1
(b) Target Current	To be measured as shown in circuit in Fig. 4a. $V_T = V_{SG} = 80V$ $V_s = 140V$ Pulse frequency = 10 kc/s		100%	I_T	16.0	19.0	mA	1
(c) Target Current	To be measured as shown in circuit in Fig. 4a. $V_T = V_{SG} = 50V$ $V_s = 100V$ Pulse frequency = 10 Kc/s		100%	I_T	7.0	9.5	mA	1
(d) Noise	To be measured using the circuit shown in Fig. 4a. $V_T = V_s = 100V$ $V_{SG} = 50V$		100%			0.75	V(pk-pk)	1,2,3.
(e) Speed	The tube shall count without error when tested in the circuit shown in Fig. 4a. $V_T = V_{SG} = 50V$ $V_s = 100V$ Frequency = 10 kc/s		100%					

Test	Test Conditions A.Q.L. %	Insp. Level	Symbol	Limits Min.	Limits Max.	Units	Notes
Group C (cont'd)							
(f) Speed	The tube shall count without error when tested in the circuit shown in Fig. 4a. $V_T = V_{SG} = 50V$ $V_s = 100V$ Frequency = 1 Mc/s	100%					1
(g) Speed	The tube shall count without error when tested in the circuit shown in Fig. 4a. $V_T = V_{SG} = 50V$ $V_s = 100V$	100%					1
(h) $\frac{1}{4}$ µ/s pulse slow speed	The tube shall count without error when tested as described in Fig. 5. $V_T = V_s = 125V$ $V_{SG} = 65V$	100%					1

NOTES

(1) Heater voltage 6.3V A.C. to be applied for at least one minute before test.

(2) Bandwidth of measuring instruments 50 c/s to 10 Mc/s.

(3) To be measured across the target resistance, with screened lead making total output cap. = 100 pF.

(4) The valves selected for this test are to be run in the circuit shown in Fig. 4a. The beam will be static on target '0'.

(5) The valves selected for this test are to be run in the circuit shown in Fig. 5.

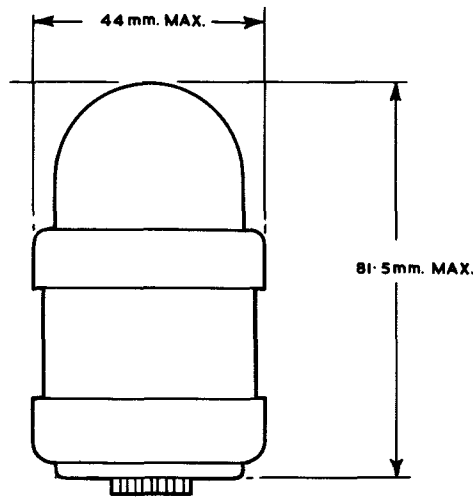

FIG. 1.

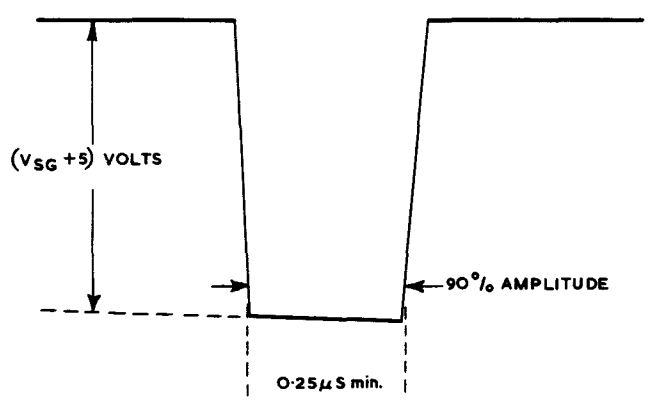

NOTE : AT MAXIMUM SPEED CARE MUST BE TAKEN TO ENSURE THAT PULSE CROSS-OVER DOES NOT OCCUR BELOW +35V WITH RESPECT TO CATHODE.

FIG. 2.

CV6103

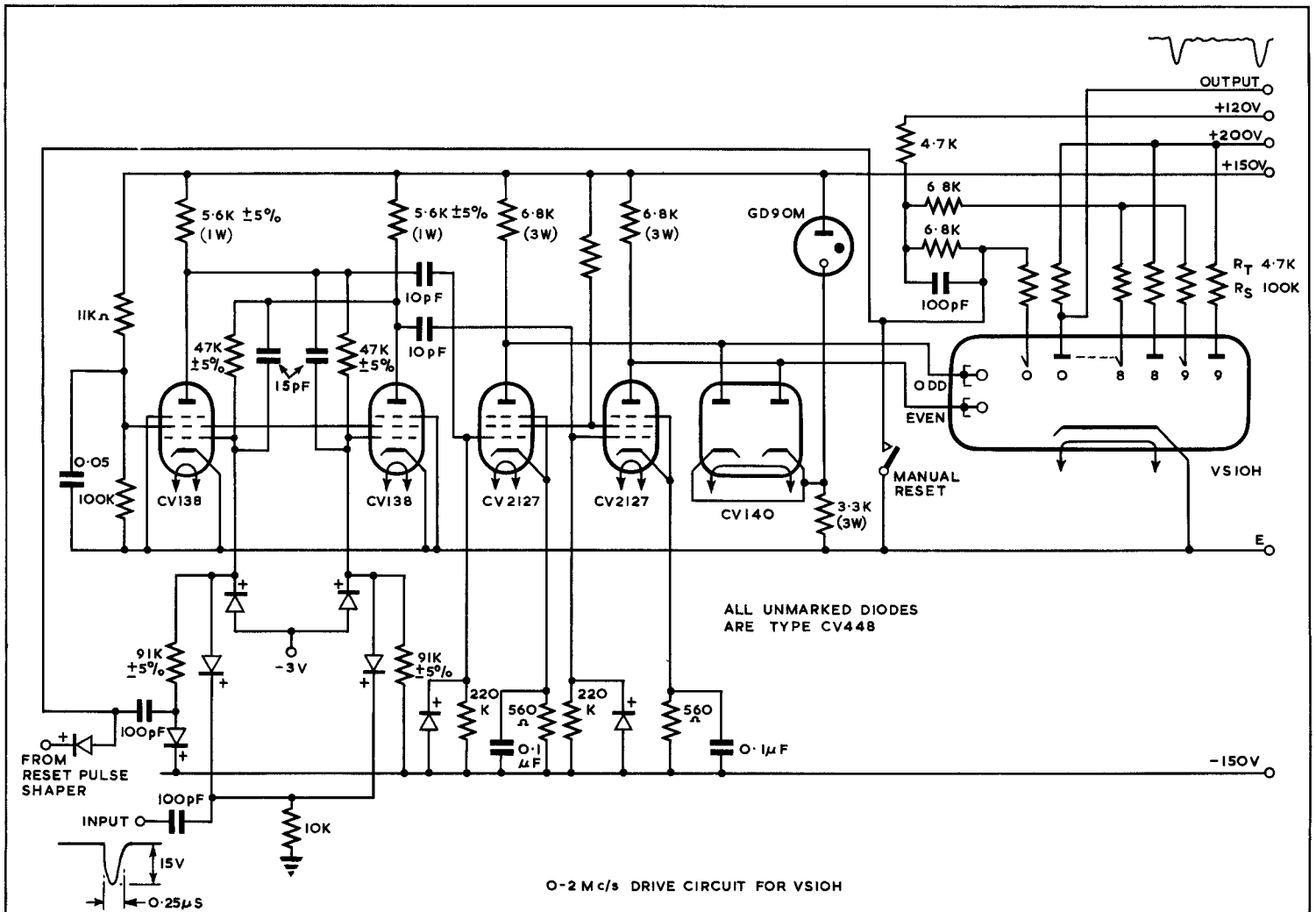

0-2 Mc/s DRIVE CIRCUIT FOR VSIOH

FIG. 3.

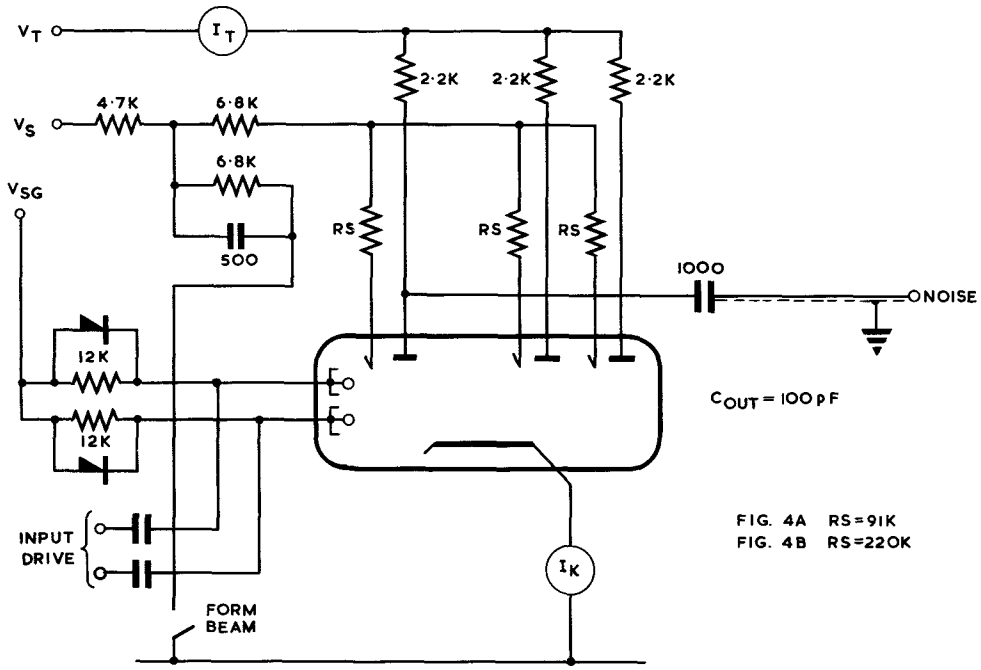
V_T
I_T
2·2K
2·2K
2·2K
4·7K
6·8K
V_S
6·8K
V_{SG}
500
RS
RS
RS
1000
NOISE
12K
12K
C_{OUT} = 100pF
INPUT DRIVE
I_K
FORM BEAM
FIG. 4A RS=91K
FIG. 4B RS=220K

FIG. 4.

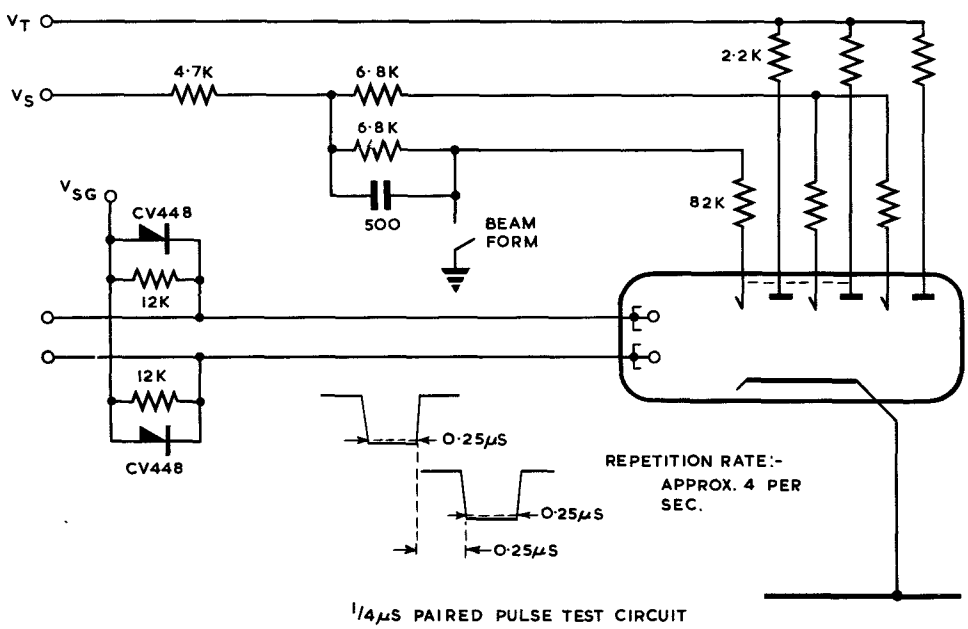
V_T
2·2K
4·7K
6·8K
V_S
6·8K
V_{SG}
CV448
500
BEAM FORM
82K
12K
12K
CV448
0·25μS
0·25μS
0·25μS
REPETITION RATE:-
APPROX. 4 PER SEC.
1/4μS PAIRED PULSE TEST CIRCUIT

FIG. 5.

MINISTRY OF AVIATION - DLRD/RRE

VALVE ELECTRONIC CV6106

Specification MOA/CV6106

Issue 1 dated 7th November, 1962.

To be used in conjunction with K1001

SECURITY	
Specification	Valve
Unclassified	Unclassified

——————→ indicates a change

TYPE OF VALVE - Low noise Travelling Wave Amplifier

CATHODE - Indirectly heated

ENVELOPE - Glass Envelope packaged in Metal Container

PROTOTYPE - N1017M

MARKING

See K1001/4

RATING

All limiting values are absolute

			Note
Heater Voltage	(V)	6.3 ± 0.3	
Heater Current	(A)	0.36	A
Maximum Heater/Cathode Voltage	(V)	30	C
Maximum Grid 1 voltage (positive value)	(V)	20	BH
Maximum Grid 1 voltage (negative value)	(V)	50	BH
Maximum Grid 2 voltage	(V)	150	BJ
Maximum Grid 2 Dissipation	(W)	C.1	
Maximum Grid 3 voltage	(V)	150	BH
Maximum Grid 3 Dissipation	(W)	0.1	
Maximum Helix voltage	(V)	400	BG
Maximum Helix current	(µA)	20	
Maximum Collector Voltage	(V)	600	BF
Maximum Collector Current	(µA)	250	
Frequency Range	K Mc/s	1.2 to 1.4'	
Minimum Low Level Gain over Frequency Range without adjustment	(dB)	25	D
Minimum Saturated Power Output	(mW)	2	
Minimum Cold Transmission Loss	(dB)	40	
Maximum Noise Factor	(dB)	7.5	
Magnetic Field	-	-	E
Net Weight	(lbs)	1.5	

BASE

International Octal

CONNECTIONS

Pin

1 - Cathode
2 - Heater
3 - Heater
4 - Grid 2
5 - Helix
6 - No connection
7 - Grid 1
8 - Grid 3

Cap Collector

R.F. CONNECTIONS

70 ohms Co-axial [redacted] Connectors TRANSRADIO CONNECTORS

DIMENSIONS

See Drawing P.6

MOUNTING POSITION

Any

NOTES

A. The peak instantaneous value of heater starting current must not exceed 2.5 Amp. The minimum cathode heating time required is 2 minutes, but in the event of a power supply failure of less than 30 seconds duration all voltages may be re-applied simultaneously.

B. All voltages given with respect to the cathode.

C. In normal operation the cathode lead should be connected to one side of the heater.

D. For input signals less than 10^{-7} watts.

E. The distribution of the magnetic field required to focus the valve is indicated on Page 6, and should be within ± 10% of values shown. Care must be taken to avoid distortion of the magnetic field by metal parts in the vicinity of the valve, and where possible non-magnetic material should be used for such parts. It is necessary to provide for alignment of the tube in the solenoid to achieve correct focussing, and generally adjustment of ± 0.2 inch about the axis is sufficient.

F. It is essential to maintain the collector positive with respect to the helix, and fluctuations in the collector voltage should be less than ± 10%.

G. The helix voltage should be adjusted to the optimum value and stabilized within ± 5%.

H. Voltages should be stabilized within ± 5%.

J. Voltage adjusted to provide 200 µA collector current and then stabilized within ± 5%.

K. Joint Services Catalogue No. 5960-99-037-2909.

SETTING UP PROCEDURE

Note: This T.W.T. is operated in a focussing solenoid and H.T. voltages must not be applied to the tube unless the solenoid is switched on.

1. Insert the tube in the solenoid. Apply pressure to the end cap rather than the R.F. connectors and ensure that the tube is fully home in the socket. Centralise the tube by means of the adjusting screws.

2. Set grid 2 voltage control to its minimum position and switch on heater and H.T. voltages. Allow two minutes for the cathode to heat up, meanwhile adjusting all voltages except grid 2 to their recommended values.

3. Increase grid 2 voltage slowly, observing both helix and collector current. The helix current will usually rise rapidly to its limiting value and it will be necessary to adjust the centering of the tube to obtain a minimum. Continue to increase grid 2 voltage and alter the centering screws until a collector current of 200 µA is obtained with a helix current of less than 2µA. The helix current should never be allowed to exceed 20 µA and should be finally set to the lowest possible value.

Note: For subsequent operation the tube may be switched on without re-adjustment.

4. If the recommended voltages on the test sheet accompanying the tube have been adhered to the tube should now be ready for use over the full frequency range. If the full "setting up" information is not available or it is desired to obtain optimum performance at a particular frequency the following procedure should be followed:

   Apply an R.F. signal of power level less than -40 dBm to the input of the tube, connect a suitable receiver to the output and adjust the helix voltage to give maximum power output.

   To set up for best noise factor remove the input signal, set the helix voltage 5 volts less than the value just obtained and adjust grid 3 voltage until the receiver output is a minimum.

TESTS

CV 6106

To be performed in addition to those applicable in K1001

Test Conditions unless otherwise stated:

Vh (V)	V Coll. (V)	I Coll. (μA)	Magnetic Field
6.3	V Helix + 100	200	see page 6.

K1001	Test	Test Conditions	AQL %	Insp. Level	Symbol	Limits Min.	Limits Max.	Units
	GROUP A							
	Heater Current	Vh. only, Note 1.		100%	Ih	0.33	0.4	A
	Helix Voltage			100%	V hel	0	290	V
	Helix Current			100%	I hel	-	5	μA
5J.6.1	Gain	Note 2. with input signal at -40 dBm level		100%		25	36	dB
	R.F. Stability	Note 3.		100%	-	No oscillations - Detected.		
5J.6.4	Noise Factor	Note 2. Compared to thermal noise at 290°K		100%	N.F.	-	7.5	dB
5J.6.7	V.S.W.R.(Input)	Note 2.		100%	-	-	2.0	-
	V.S.W.R.(Output)	Note 2.		100%	-	-	2.5	-
	GROUP B	Note 7						
	Saturation Test	Note 4 Frequency 1300 Mc/s	1.0	II	-	-	3	dB
	GROUP C	Omitted						
	GROUP D	Note 7						
5J.6.5	Cold Attenuation	Frequency 1300 Mc/s	6.5	I	-	40	-	dB
	GROUP E	Omitted						
	GROUP F	Note 5 & 7						
	Life Test							
	Test point 1000 hr.	I Coll = 200 μA	6.5	IC	-	-	-	-
	Gain	As in Group A				25	36	dB
	Noise Factor	As in Group A				-	7.5	dB

K1001	Test	Test Conditions	AQL %	Insp. Level	Sym-bol	Limits Min.	Limits Max.	Units
	GROUP G	Notes 6 and 7						
	Electrical retest after 14 days holding period	Note 2						
	Inoperatives	No voltages		100%				
	Gain	As in Group A.		100%	-	25	36	dB

NOTES

1. The heater current shall be measured not less than 2 minutes after application of heater voltage.

2. Tests shall be performed at 1200, 1300 and 1400 Mc/s.

3. The input waveguide shall be short circuited and the output waveguide mismatched to a V.S.W.R. not less than 10:1 at 1300 Mc/s, and terminated by a matched crystal detector connected to the vertical deflection plates of an oscilloscope. The helix and collector voltages shall be swept at 50 c/s by a waveform of 100 volts peak to peak amplitude, and the horizontal deflection plates of the oscilloscope swept in the same phase and frequency. The helix voltage is then adjusted to obtain a symmetrical trace on the oscilloscope. The sensitivity of the test circuit shall be that necessary to provide visible valve noise output.

4. Measure the gain as in Group A test with a large interference signal at 1400 Mc/s of amplitude -40 dBm also applied to the input. The measured gain of the 1300 Mc/s signal shall not differ from that obtained in the Group A test by more than 3dB.

5. The minimum sample size shall be according to the following table

Lot size	Sample size Normal	Sample size Reduced
2 - 15	2	1
16 - 40	3	2
41 - 110	5	3
111 - 300	7	4
301 - 800	10	5

801 and above as K1001 App. XI Table IIIB

The Manufacturer may test additional samples at his discretion.

Reduced Inspection shall be permitted after 10 consecutive lots have been accepted.

6. The lot shall be held in store for at least 14 days and shall then be tested for Inoperatives and Gain. If there are no failures the lot shall be accepted. If there are failures in either of the tests given the lot shall be held for a further 14 days and then retested. The lot shall be rejected if there are any further failures.

7. Where production is at a low rate, and consists of less than 25 per month, the lot size shall be considered as consisting of a month's production for the purpose of determining the sample size required by this specification for test purposes.

OUTLINE

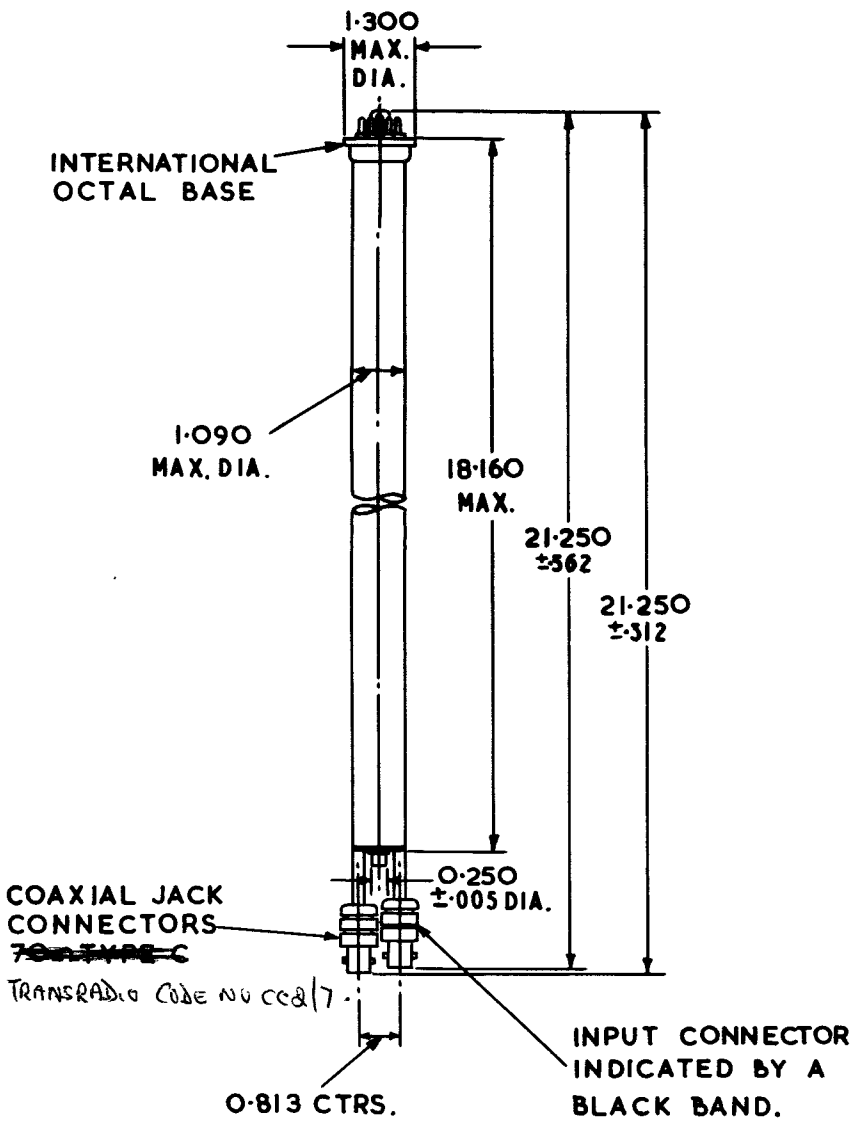

ALL DIMENSIONS IN INCHES.

CV6106

RECOMMENDED MAGNETIC FIELD DISTRIBUTION

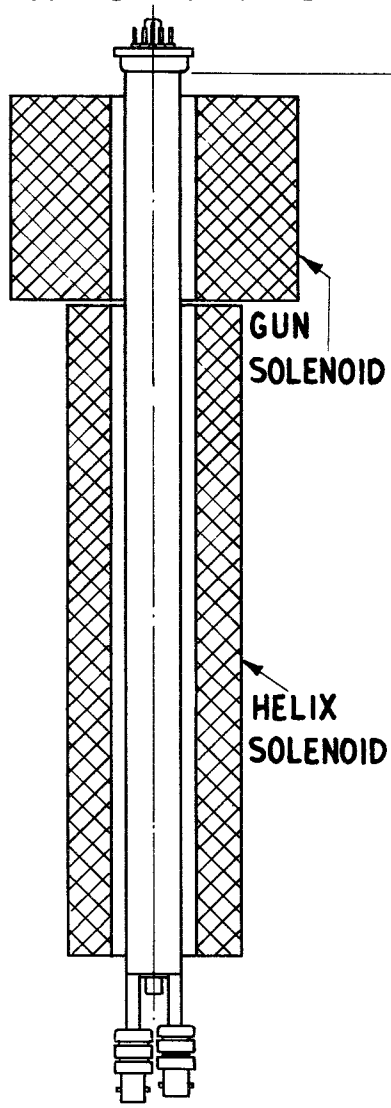

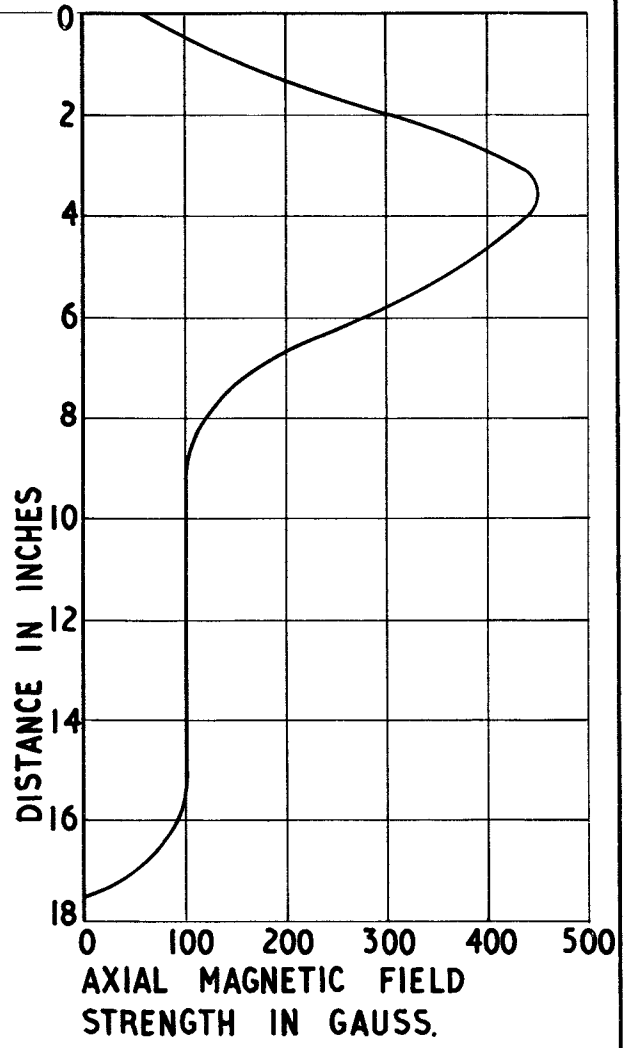

TYPICAL
NOISE/VOLTAGE CHARACTERISTIC

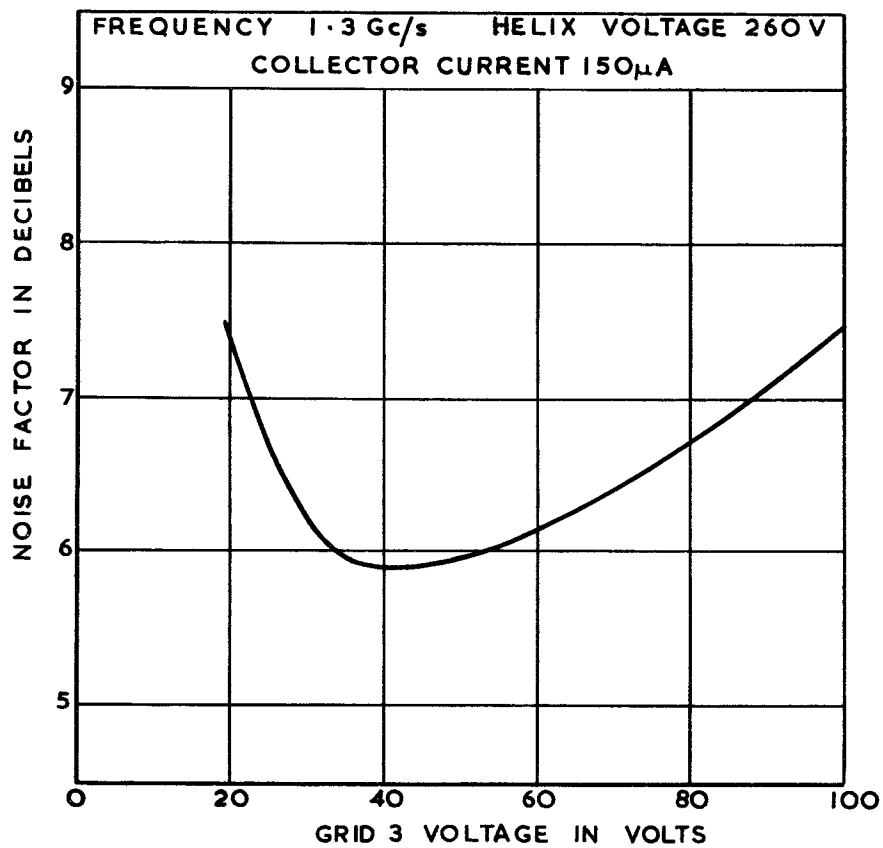

MINISTRY OF TECHNOLOGY - DLRD/RME

Valve Electronic **CV6107**

Specification Mintech/CV6107 Issue 2A dated December 1968 To be read in conjunction with K1001 excluding clauses:- 5.2,5.3,5.5,5.8,5.9,5.12, and 11.42	SECURITY Specification: Unclassified Valve: unclassified

Indicates change

TYPE OF VALVE - Monitor diode, note A CATHODE - Indirectly heated PROTOTYPE - VX 9237C BS510	MARKING As in K1001/4.

RATING

Non-simultaneous
All limiting values are absolute
Not for imspection purposes

			Notes
Initial heater voltage, volts r.m.s.		6.3±7½%	B
Heater current for Vh=6.3,Amps r.m.s.		1.2	
Frequency range,	GHz	2.7-3.2	C
Max. peak power input	kW	20	
Max. mean input power	W	18	
Max. ambient temperature	°C	70	D
Max. pulse length	μS	15	E

COLLECTIONS

See drawing on page 5
Locating collar:- heater and cathode
End Cap:- Heater
Centre contact:- Collector

END CAP

K1001/A1/D5.1

DIMENSIONS

See page 5

NOTES and DATA

A. The valve, as detailed on page 3 is normally used in a waveguide holder the arrangement being a waveguide-coaxial transistion into the distributed diode, and a coaxial load termination after the distributed diode.

B. For maximum life the heater voltage shall be adjusted, when the valve is running with an RF input, to a value between 10% and 20% above that required to maintain the diode output. A threshold heater voltage will be found which will just maintain the pulse output at the level obtained with 6.3 volts heater. Heater voltages below this will cause the pulse amplitude to sink to lower than the initial level.

C. By using suitable mounts, the diode will operate over the range 2.5 to 6.55 GHz.

D. The mount shall be positioned to allow free convection of air about the load.

E. In certain circumstances this maximum pulse length may be exceeded.

F. The NATO Stock Number is 5960-99-037-2964.

TESTS

To be performed in addition to those applicable in K1001.

Tests shall be performed after a minimum holding period of 168 hours.

Test Conditions: Unless otherwise stated:-

Vh = 6.3 V r.m.s.

The heater shall have been on for at least one minute before each measurement is made.

Test No.	Test	Test Conditions	Insp Level	AQL %	Limits Min.	Limits Max	Unit
	GROUP A		100%				
1	Heater Current				1.1	1.3	A rms
2	V.S.W.R.	No heater. Note 1.			-	1.3	ratio
3	Sensitivity	Notes 2 and 3. (a) f = 2800 ±25MHz, (b) f = 3100 ±25MHz } in appropriate approved mount.			235 250	290 305	Wpk Wpk
4	Mechanical Dimensions	In accordance with the outline drawing on page 5.			-	-	-
	GROUP B omitted						
	GROUP C		II	6.5			
5	Collector Current	Note 4.		4	35	-	µA
6	Emission	Note 5.		4	1.5	-	A
7	Diode Output for Heater Run	Notes 2, 6 and 7.		4	8.8	9.2	Vpk
	GROUPS D and E omitted						
	GROUP F						
8	Heater Cycle Life, 500 hours	One cycle to consist of 3 minutes at Vh = 7 ±0.1Vrms and 3 minutes off. Note 9.	Note 8				
	Post Test End Point						
	Heater Current	As in test (1)			1.0	1.4	Arms
9	Cathode Life 1000 hours	Ia = 40mA d.c. Note 9.	Note 8				
	Post Test End Point				Note 16		
	Collector Current	As in test (5)			-	10	% Δ
	Emission	As in test (6)			-	10	% Δ
	Sensitivity	As in test (3)			-	10	% Δ
10	Shelf Life 3 years	No voltages. Notes 9 and 10.	Note 11				
	Post Test End Point				Note 16		
	Sensitivity	As in test (3)			-	10	% Δ
	GROUP G omitted						

CV6107

TESTS (cont'd.)

Test No.	Test	Test Conditions	Insp. Level	AQL %	Limits Min.	Limits Max	Unit
	GROUP F		Q.A.				
11	Operational Life 1000 hours	Notes 2 and 7.					
	Post Test End Point				Note 16		
	V.S.W.R.	As in test (2)			-	10	%Δ
	Sensitivity	As in test (3)			-	10	%Δ
	Collector Current	As in test (5)			-	10	%Δ
	Emission	As in test (6)			-	10	%Δ
	Diode Output for Heater Run	As in test (7)			-	10	%Δ
12	Shock	No voltages. Acceleration = 6g Duration 10 mS. Note 12.					
	Post Shock				Note 15		
	V.S.W.R.	As in test (2)			-	-	
	Sensitivity	As in test (3)			-	-	
	Collector Current	As in test (5)			-	-	
	Emission	As in test (6)			-	-	
	Diode Output for Heater Run	As in test (7)			-	-	
13	Power Input (1)	Note 13.					
14	Power Input (2)	Note 14.			Note 14		

Notes

1. The r.f. match shall be measured with the valve cold over the frequency bands 2.7 to 2.95GHz and 2.95 to 3.2GHz in the two appropriate approved holders.

2. The valve shall be tested in an approved test rig as shown on page 7. at a minimum p.r.f. of 250 pps and pulse duration 10µS ±1µS. Sensitivity shall be measured by setting the pulse output of the monitor diode to 9V ±1% across a 68 ohm ±1% load. The observed output pulse shall be trapezoidal and the time of rise and fall shall be an insignificant fraction of the pulse duration. The p.r.f. shall be measured or otherwise deduced and the pulse duration between the half power points shall be measured and the peak power calculated from the following:-

$$\text{peak power} = \frac{\text{mean power}}{\text{pulse duration x p.r.f.}}$$

3. The manufacturer may carry out this test as many times as he wishes. All results must be recorded and the average must lie between the specified limits. If the manufacturer is required to retest valves the procedure given in Note 2 shall apply, without reference to previous results.

4. The current which flows through a total resistance of 3kΩ ±2% connected between cathode and collector shall be measured. The current shall flow into the collector.

5. A pulse voltage 15µS minimum and minimum p.r.f. 250pps shall be applied between collector and cathode. The voltage amplitude of the pulse, which shall not exceed 700V shall be adjusted for emission which shall be equal to, or greater than, 1.5A over the whole of the pulse.

6. The heater shall be reduced in steps by 0.55V ±0.05 volts per step and the valve run at each step for 10 seconds. When the step is reached at which the amplitude falls, the heater voltage shall immediately be raised by two steps. The diode output shall be measured across the same load as in test (3).

7. At the discretion of the manufacturer, tests shall be performed at either frequency range.

8. Two percent of production shall be tested.

9. Test is for information only. Any failures to be reported to the Qualification Authority.

10. The post test end point measurement shall be made at the following intervals:- 6 months, 12 months and 3 years.

11. One tube shall be submitted to shelf life test every three months during a production run.

12. The valve shall be mounted in wax in a box of square cross section. Three shocks shall be applied to the locating collar and along the cathode axis and three shocks shall be applied in one direction perpendicular to this.

13. The valve in an approved mount shall withstand a peak power input of 20kW minimum, with a pulse duration of 1.9 ±0.2µS at 500pps at any frequency within the range 2.7 to 3.7GHz, at the discretion of the manufacturer. The valve shall be running during the test.

14. With the test rig defined in Note 2 but with a pulse duration of 15µS, a sensitivity test, either test 3a or 3b, at the manufacturers discretion, shall be repeated to the same limits.

15. The initial test limits in Group A or Group C shall apply as appropriate.

16. The limits apply to the allowable change in the measured parameters from the initial pre-test measurement.

OUTLINE DRAWING

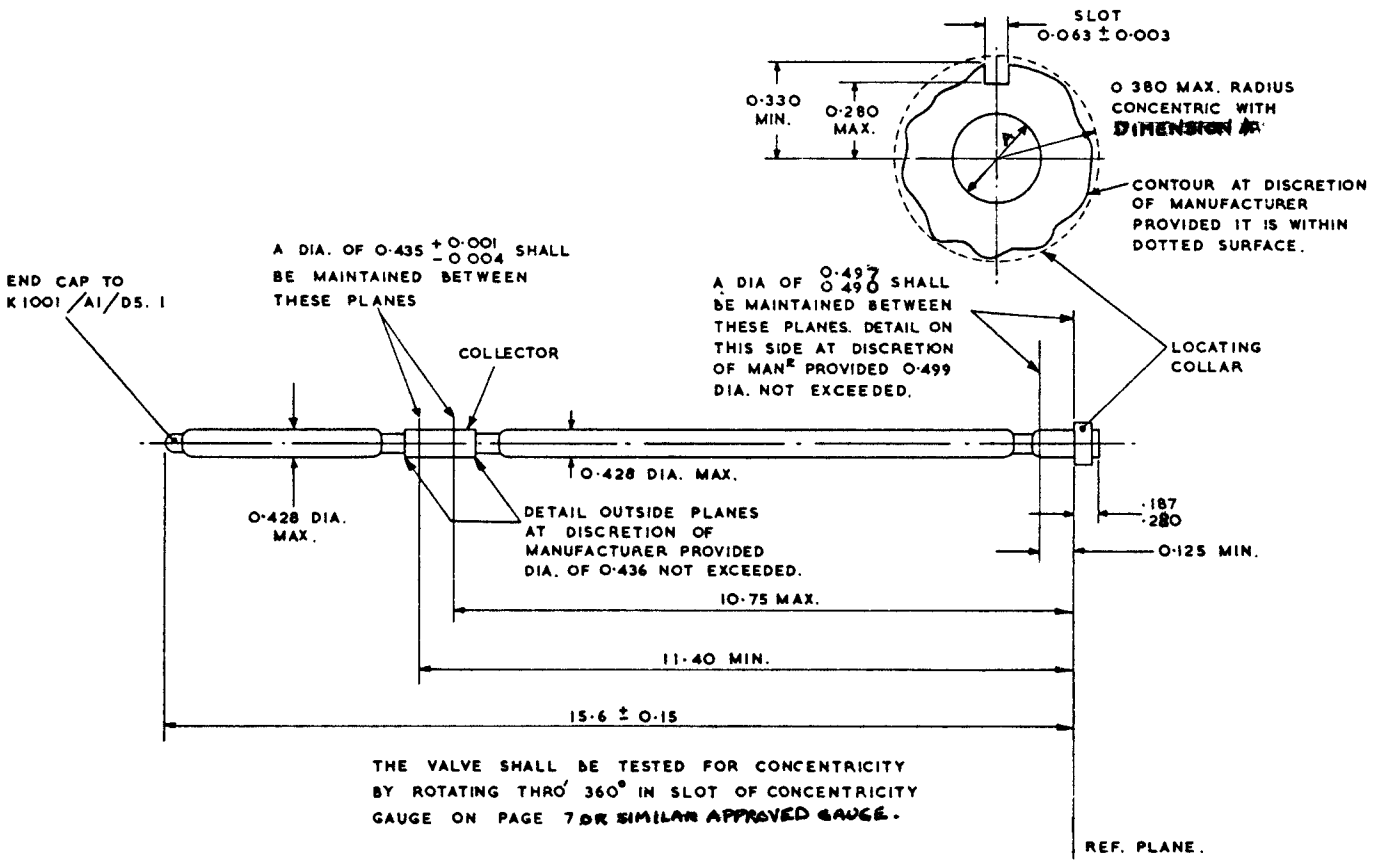

THE VALVE SHALL BE TESTED FOR CONCENTRICITY BY ROTATING THRO' 360° IN SLOT OF CONCENTRICITY GAUGE ON PAGE 7 OR SIMILAR APPROVED GAUGE.

ALL DIMENSIONS IN INCHES

CV6107/2A/5

CV6107

CONCENTRICITY GAUGE

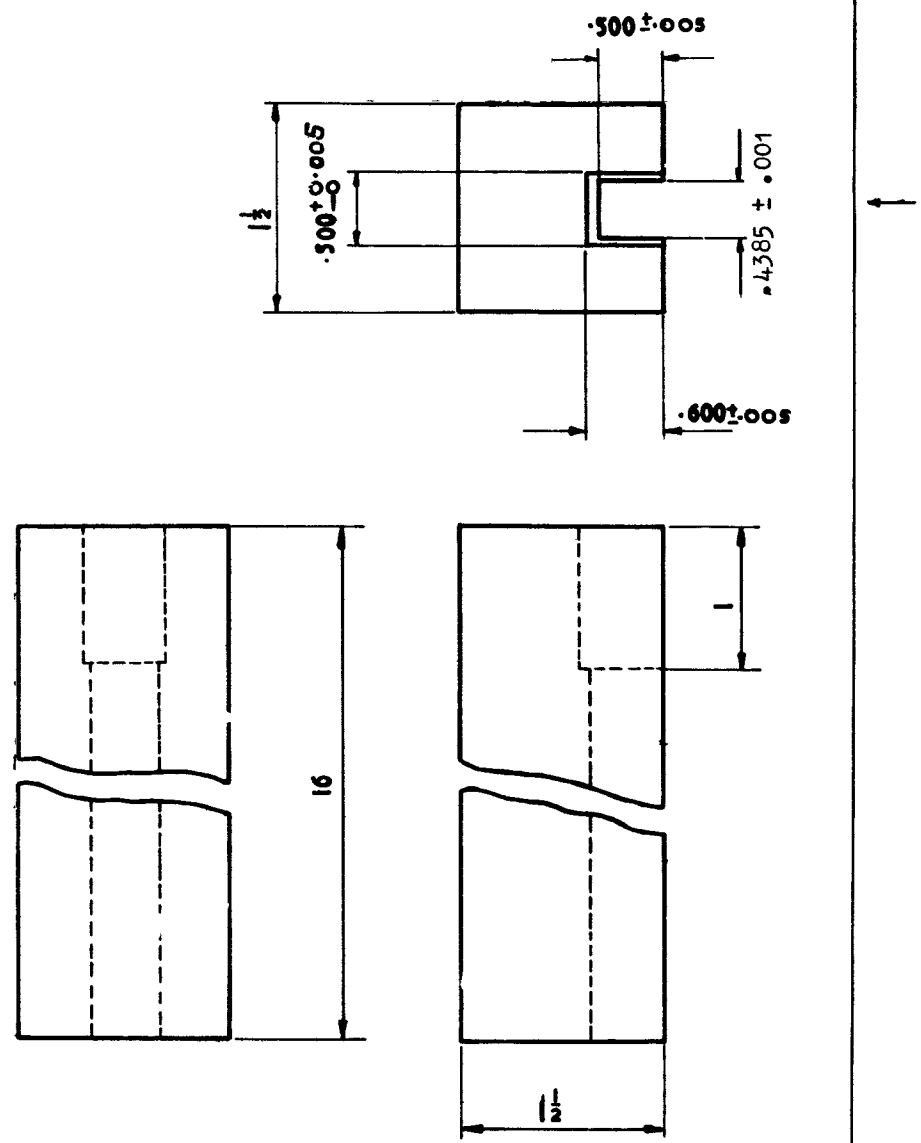

ALL DIMS IN INCHES

SCHEMATIC OF APPROVED TEST RIG. FOR MONITOR DIODE

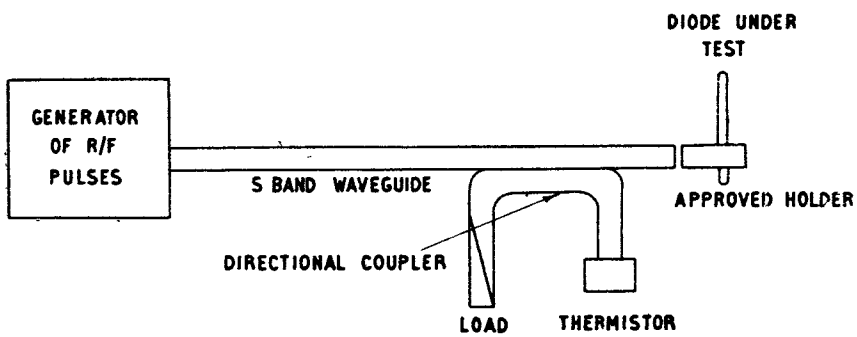

MINISTRY OF AVIATION - DLRD/RRE

VALVE ELECTRONIC CV6109

Specification MOA/CV6109	SECURITY	
	Specification	Valve
Issue 1 dated 18th June, 1962		
To be read in conjunction with K1001, BS448 and BS1409	Unclassified	Unclassified

→ indicates a change

TYPE OF VALVE - Cathode Ray Tube 'A' Scan
DEFLECTION - Electrostatic Symmetrical or Asymmetrical
FOCUS - Electrostatic
BULB - Glass Internalconductive coating
SCREEN - BY8
PROTOTYPE - 1646C,

MARKING

See K1001/5

BASE

B12F

CONNECTIONS

1.	Grid	g
2.	Cathode	k
3.	Heater	h
4.	Heater	h
5.	Anode 2	a2
6.	Internal Coating	m
7.	Anode 1	a1
8.	Deflection Plate	y1
9.	Deflection Plate	y2
10.	Anode 3	a3
11.	Deflection Plate	x2
12.	Deflection Plate	x1

RATING AND CHARACTERISTICS

All limiting values are absolute

			Note
Heater Voltage	(V)	6.3	
Heater Current	(A)	0.6	A
Max. Anode 1 voltage	(kV)	2.5	
Max. Anode 2 Voltage	(kV)	2.0	
Max. Anode 3 Voltage	(kV)	6.0	
Max. Negative Grid Voltage	(V)	200	B
Max. Heater-cathode Voltage	(V)	100	

TYPICAL OPERATING CONDITIONS

Anode 1 Voltage	(kV)	1.4
Anode 2 Voltage	(V)	830
Anode 3 Voltage	(kV)	3.75
Sensitivity x plates	(mm/V)	$\frac{1000}{Va/3}$
Sensitivity y plates	(mm/V)	$\frac{1270}{Va3}$

DIMENSIONS

See drawing on Page 5

NOTES

A. Alternatively, 0.3A

B. The grid must never become positive with respect to the cathode

C. Joint Service Catalogue No. 5960-99-037-2996

TEST CONDITIONS

Va1 (kV)	Vh (V)	-Vg(V)	Va3(kV)	Va2
1.4	6.3	adjust	3.75	Optimum Focus

The x and y deflection voltages shall be asymmetrical

K1001 Ref.	TEST	TEST CONDITIONS	AQL %	Insp. Level	Symbol	Limits Min.	Limits Max.	Units
5A.1	General Inspection	No Voltages See drawing on Page 5		100%				
5A.2	Loose Particles	No Voltages		100%				
5A3.1	Insulation			100%				
5A3.2	Grid Insulation Increase in Voltmeter reading	Rg = 5M		100%			100	%
5A3.3	Heater-cathode Leakage current	Vhk = ± 100v		100%	I_{hk}		50	µA
	Heater Current	Note 3		100%	I_h	0.54	0.66	A
5A.10	Negative Grid cut off Voltage (V1)	No deflection		100%	V_g	20	50	V
5A.8	Negative Grid Voltage (V2) and Cathode Current	Raster scan of convenient size. Adjust V_g for light intensity of .015 candela through C_2 filter. The beam current shall increase over the grid voltage range V_1 to V_2.		100%	V_g	RECORD		V
				100%	I_k		150	µA
	Grid drive (V_1-V_2)			100%	V_g		20	V
5A.12	Useful screen area	y direction		100%		35		mm
		x direction				125		mm
5A.17	Persistence measured as decay time to 1% brightness	With a raster of convenient size and a luminence of 2 foot lamberts when viewed through a C2 filter or equivalent.		100%		8		Secs.
5A.7	Focus, line width at centre of trace	With Vg adjusted to the value given in 5A.10 above, the grid is pulsed with a square waveform, p.r.f. 100 p.p.s. duration 100 µSecs and amplitude equal to the value V1 minus V2 as above		100%		-	0.8	mm

TESTS (Contd.)

CV6109

K1001 Ref.	TEST	TEST CONDITIONS	AQL %	Insp. Level	Symbol	Limits Min.	Limits Max.	Units
	Anode 2 Voltage	Optimum Focus, other conditions as above		100%		750	900	V
5A.11 .1	Spot Position and displacement			100%		-	7.5	mm
	Deflection Sensitivity x plates		6.5	IB	S_x	$\frac{900}{Va3}$	$\frac{1100}{Va3}$	mm/V
	y plates				S_y	$\frac{1100}{Va3}$	$\frac{1430}{Va3}$	mm/V
	Orientation of Deflection Axis	x axis relative to XX[1] axis on drawing page 5		100%		-2°	+2°	
		Angle between x and y deflection axes		100%		88°	92°	
	Orientation of Base axis to axis YY[1]	No Voltages		100%			+10°	
	Trapezoidal Distortions	Minimum area of scan 100 mm x 30 mm	6.5	IB				
	1) Angle between adjacent sides					87°	93°	
	2) Angle between opposite sides					177°	183°	
	Screen Blemishes Stones, Bubbles and Screen defects	Defocussed raster to cover useful screen area. Vg adjusted for convenient light intensity Note 1						
	Max. size of any blemish					-	1	mm
	No. of blemishes between 0.25-0.6 mm					-	10	
	No. of blemishes between 0.6-1.0 mm					-	5	
11.5	Vibration			QA				
5A.13	Capacitance	No Voltages	6.5	IC				
	Each x plate-all				Cx-all		10	pF
	Each y plate-all				Cy-all		10	pF
	Grid-all				Cg-all		9	pF
	Each x plate				Cx-y		3.5	pF
	Each y plate				Ck-all		7	pF
	Cathode - all							
5A.21	Resistance to External Pressure	No Voltages						
	LIFE	To be specified		Note 2				

NOTES

1. If two blemishes are separated by a distance not greater than the maximum dimension of the largest blemish in a group then the group of blemishes shall be considered as one blemish of dimensions equal to the maximum overall dimensions of the group.

2. One tube per lot shall be tested, further conditions to be determined.

3. Limits of 0.27A to 0.33A apply as alternative.

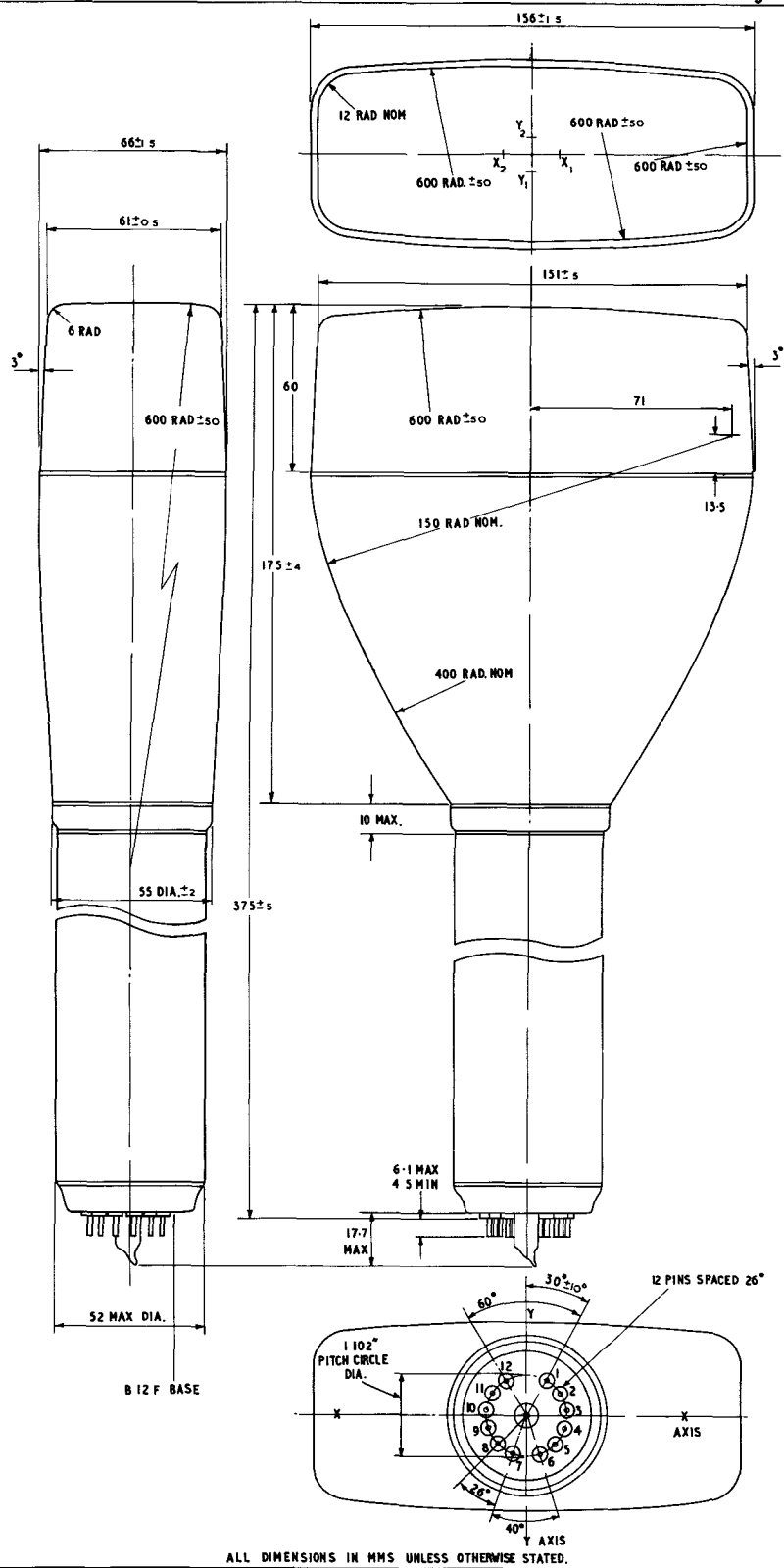

ALL DIMENSIONS IN MMS UNLESS OTHERWISE STATED.

THIS VALVE MAY BE RADIO ACTIVE TO CLASS 1 (SEE K1001, APPENDIX XX)

(AL3)

MINISTRY OF AVIATION - DLRD/RRE VALVE ELECTRONIC **V 611**

Specification MOA/CV6110 Issue 1 dated 9th March, 1962. To be read in conjunction with K1001	SECURITY Specification: Unclassified Valve: Unclassified

→ indicates a change

TYPE OF VALVE: Microwave Gas Switch (Pre TR Tube)

ENVELOPE : Silica

PROTOTYPE : VX9230

MARKING

See K1001/4

DIMENSIONS

See drawing on Page 5

MOUNTING POSITION

Any (Note C)

PACKAGING

See K1005

JOINT SERVICES CATALOGUE NUMBER

5960 - 99 - 037 - 3120

RATING

Not to be used for test purposes
All limiting values are absolute

		Note
Operating Frequency Range (kMc/s)	2 - 4	A
Max. Peak Power Input (MW)	6	B
Max. Mean Power Input (kW)	12	B
Max. Pulse width (μs)	10	

NOTES

A. The valve may be used in a suitable waveguide mount at any frequency in this range. The bandwidth and matching are determined by the design of the mount.

B. The quoted power is that which is measured incident on a balanced duplexer where two valves are each operating across both arms of the duplexer.

C. The hole through which the tube is mounted should be 0.5603"/0.5606" dia.

TYPICAL OPERATING CONDITIONS

Primary Switch at 3 kMc/s. Phase Shift Duplexer

Two tubes may be used side by side in a mount having a Q of 2.3 and an insertion loss of less than 0.1 dB (Drawing No.RR/C252285). With a 10 μs pulse and peak and mean powers of 12 MW and 24 kW respectively the recovery time of 3dB is approximately 200 μs and the arc loss 0.05dB. The leakage power will depend on the characteristics of the waveguide circuit and in general will be about 30dB down on the incident power. The life expectation is several thousand hours. The recovery time is less for lower mean powers or shorter pulse widths.

Primary Switch at 3kMc/s. Balanced Duplexer

The tubes may be operated in the same mount in a balanced duplexer. In this case the maximum peak and mean powers are reduced by a factor of 2 and the recovery time and are loss are the same as before. The leakage power is about 50dB down on the incident power.

TEST CONDITIONS

The valves shall be tested in an approved balanced duplexer in WG10. The minimum v.s.w.r. looking outwards from the balanced duplexer shall not be less than 0.83 on any arm.

tp(μsec)	Du	Freq.(kMc/s)
1.9 ± 10%	0.00095	3.000 ± 0.5

K1001	TEST	TEST CONDITIONS	AQL %	Insp. Level	Symbol	Limits Min.	Limits Max.	Units
	GROUP A							
5H.4.2.8	Firing Power	Adjust r.f. input power from a low value until valve strikes. Note 1		100%		-	50	kW
5H.4.2.5.1	Recovery Time to 3 dB	Peak power input = 150kW ± 10% Notes 1, 2, 3 and 4		100%		32	48	μsecs
	GROUPS B AND C OMITTED							
5H.4.1.3.2	GROUP D v.s.w.r.	Notes 5,6 and 10 Frequency (1) 2.800 ± 0.005kMc/s (2) 2.700 ± 0.005kMc/s (3) 2.900 ± 0.005kMc/s	6.5	I		 0.96 0.60 0.60	 - 0.75 0.75	
	GROUP E	Note 7		10%				
7.1	Glass strain	No Voltages						
11.3	Fatigue	No. Voltages Frequency any within range 40-200 c/s Min. peak acceleration = 5g Duration = 64hrs. Note 8						
11.4	Shock	No Voltages Hammer angle = 30°						

K1001	TEST	TEST CONDITIONS	AQL %	Insp. Level	Sym-bol	Limits Min.	Limits Max.	Units
	GROUP E (Contd.)							
5H.5.2.3	Temperature Cycling	No Voltages Three cycles between -40°C and 100°C						
	Post Fatigue Shock and Temperature Cycling Tests Breakdown							
	Breakdown Power	As in Group A				-	50	kW
	GROUP F OMITTED							
	GROUP G							
	Re-test after 28 days Holding period (Note 9)							
	Breakdown Power	As in Group A	1	100%		-	50	kW
	Recovery time	As in Group A	1	100%		32	48	μs

NOTES

1. The power measured or quoted shall be that which is incident on the balanced duplexer.

2. The valve shall be moved up and down in the duplexer through all positions for which the accurately dimensioned section of the valve is completely through both waveguides.

3. Measurements shall be made at various positions following rotation of the valve in the mount.

4. The power shall be applied for at least one minute immediately before this measurement is made.

5. This test shall be performed with the valve fitted into ~~a mount constructed to the details given in R.R.E. drawing~~ AN APPROVED MOUNT. ~~RR/C252285 or any other mount of approved design.~~ THE DETAILS FOR A SUITABLE MOUNT ARE GIVEN IN R.R.E. DRAWING RR/CQS-2265.

6. Valves shall be tested in pairs selected at random.

7. The sample size used for the purpose of the tests contained in Group E shall comprise of 10% of the lot size taken to the nearest whole number above the 10% value. Where the production rate is less than 25 per calendar month, a lot shall be considered as the total production of that month.

   The criterion of acceptance shall be that there shall not be more than one failure in any ten consecutive samples tested. During the initial period of any contract following a non-production period exceeding six months, valves may be despatched without awaiting the cumulation of the ten samples provided that the results of tests made do not preclude acceptance under the criterion.

NOTES (Contd.)

Where rejection is incurred production shall cease and the approval authority informed.

The manufacturer may, at his discretion, test additional valves or apply more than one test to each sample.

At least half of the samples taken for Group E shall be subjected to the mechanical tests.

8. The valve shall be vibrated in the horizontal plane only.

9. This test shall be performed in place of life tests.

10. R.F. power not to exceed 100mW.

* LOWER LIMIT APPLIES OVER OPERATIVE LENGTH ONLY.

DIMENSIONS IN INCHES.

CV6112

VALVE ELECTRONIC

ADMIRALTY SURFACE WEAPONS ESTABLISHMENT

Specification AD/CV6112. Issue No. 1 dated 25.5.62 To be read in conjunction with K1001 and B.S.1409	SECURITY Specification: Unclassified Valve: Unclassified

TYPE OF VALVE: Voltage Tuned Oscillator (Q Band)	MARKING
CATHODE: Indirectly heated.	See K1001/4
ENVELOPE: Glass enclosed in a metal shell	Ser. No. .....
PROTOTYPE: VX 7140	

RATING

(All limiting values are absolute)

			NOTE
Heater Voltage (Nom.)	(V)	6.3	A
Max. Heater Current	(A)	0.7	
Max. Heater Current Surge	(A)	2.0	
Max. Solenoid Current	(A)	10	B
Max. Solenoid Voltage	(V)	24	B
Min. Delay line Voltage	(V)	680	C
Max. Delay line Voltage	(V)	3000	C
Max. Cathode Current	(mA)	15	D
Max. Anode Voltage	(V)	700	
Max. Anode Current	(mA)	2	
Minimum Total Tuning Range	(kMc/s)	26.5 to	F
	(kMc/s)	40.0	
Min. Power Output	(mW)	10	
Max. Negative Grid 1 Voltage	(V)	450	

BASE

Flying lead with terminals
J.S. Cat. No. 5940-99-940-0053

CONNECTIONS

Lead Colour	Electrode
Yellow	Heater-Cathode (Note G)
Brown	Heater
Green	Grid
Blue	Anode
Red	Delay line and Collector (Note D)

Power output via Waveguide size No. 22 using Coupler Inter-Service Cat. No. Z830018. Note H.

Solenoid: Note J.

DIMENSIONS

See Drawing on page 6.

NOTES

See page 2.

NOTES

A. The h.t. voltages shall not be applied until at least two minutes after the application of the heater voltage. In all cases the solenoid and delay line voltages must be applied before the anode voltage.

B. The magnetic field required to collimate the electron beam is provided by a solenoid which is an integral part of the valve. The recommended value of the current to be taken by the solenoid is to be shown on data sheets provided by the manufacturer. It is recommended that a current stabilised solenoid supply be employed.

The value of this current must be 9.0 Amps for which a d.c. supply voltage of 16 V min. to 24 V d.c. max. is necessary. If the variations of the solenoid current (including transients, temperature effects etc.) are greater than $\pm$ 0.05 Amps about the stated value, then variations in the output frequency can be expected, accompanied by variations in power and noise output.

Stray magnetic fields from any source, can, if sufficiently strong, affect the performance of the valve.

The field strength of such magnetic fields should not exceed 30 gauss at the surface of the solenoid to avoid any effects.

C. In all cases the solenoid and delay line voltages must be applied before the anode voltage.

D. The delay line and collector are connected inside the valve and therefore, "delay line current" includes collector current.

E. The valve has been designed for forced air cooling from an axial flow fan and requires an airflow of 25 c.f.m. With this amount of airflow the valve will operate in ambient temperatures up to 55°C.

A fan designed to produce 53 c.f.m. at 0.13 in. total w.g. with an impellor diameter of 3.9 in. will deliver the requisite amount of air.

The airflow must be sufficient to limit the change in solenoid resistance to a factor of 1.4 above its value at 20°C.

F. The valve is tuned by varying the delay line voltage (V_{dl}). The relationship between frequency and delay line voltage is approximately as shown in Fig. 1 on page 7. The valve oscillates at a frequency of 26.5 kMc/s at a delay line voltage not lower than 680V, and at a frequency of 40.0 kMc/s at a delay line voltage not higher than 2750V.

G. One limb of the heater and the cathode are connected together inside the valve.

H. The waveguide output coupler is electrically connected to the solenoid shell but is isolated from the delay line of the valve. This permits the valve to be operated with either the line or the cathode at earth potential.

The solenoid shell should therefore be connected to earth potential.

The insulation resistance between all electrodes and the solenoid shell with 4 kV d.c. applied at N.T.P. shall exceed 100 megohms.

J. The connections to the solenoid are made to a two pin plug type A.P.208600 attached to the metal shell of the solenoid. Pin A is connected to the solenoid and to the shell. Pin B is connected to the solenoid only and should be connected to the positive side of the solenoid supply.

K. The Joint Service Catalogue No. is:- 5960-99-037-3123.

CV6112

TESTS

To be performed in addition to those applicable in K1001, and in the specified order unless otherwise agreed with the Inspecting Authority:

Test conditions, unless otherwise stated:-

V_h (V a.c.)	V_a (V)	V_{g1} (V)	I solenoid (A d.c.)	Cooling	V.S.W.R.
6.3	V_o (See Note 1)	0	9.0 (See Note 2)	(See Note 3)	<2.0 : 1

	Test	Test Conditions	No. Tested	Symbol	Limits Min.	Limits Max.	Unit
a	Heater Current (After 2 minutes)	$V_{dl} = V_a = 0$	100%	I_h	0.3	0.7	A
b	Oscillation at 26.5 kMc/s	Adjust V_{dl} for 26.5 kMc/s. Note 5, 6 & 7 (Record)	100%				
	(i) Delay line voltage.			V_{dl}	680	880	V
	(ii) Anode Current			I_a	-	2	mA
	(iii) Power Output			Po	10	-	mW
c	Oscillation at 33.0 kMc/s	Adjust V_{dl} for 33.0 kMc/s. Note 5. (Record)	100%				
	(i) Delay line voltage.			V_{dl}	1260	1480	V
	(ii) Cathode current			I_k	-	13	mA
	(iii) Anode current			I_a	-	2	mA
	(iv) Power Output			Po	10	-	mW
d	Oscillation at 40.0 kMc/s	Adjust V_{dl} for 40 kMc/s. Note 5. (Record)	100%				
	(i) Delay line voltage.			V_{dl}	2350	2750	V
	(ii) Cathode Current			I_k	-	15	mA
	(iii) Anode Current			I_a	-	2	mA
	(iv) Power Output			Po	10	-	mW
e	Anode Cut-Off	Adjust V_{dl} over range given by tests b(i) and d(i). Va = 0 Notes 8 and 5.	100%				
	Power Output			Po	-	0	mW
f	Grid 1 Cut-Off	Set V_{g_1} = -300V Adjust V_{dl} over range given by tests b(i) and d(i). Notes 5 and 8.	100%				
	Power output			Po	-	0	mW

	Test	Test Conditions	No. Tested	Symbol	Limits		Units
					Min.	Max.	
g	Stability at 26.5 kMc/s 30.0 kMc/s 33 kMc/s 36.5 kMc/s 40 kMc/s (i) Power Output (ii) Freq. Deviation	V_{dl} adjusted to test frequencies. Note 5. I solenoid set at 9.0A d.c. and then altered by ± 0.05A d.c. in turn.	Q.A.	 Po ΔF	 10 -	 - 10	 mW Mc/s
h	Frequency Pulling At 26.5, 33.0, and 40.0 kMc/s.	Adjust V_{dl} for test frequencies. Note 5 and 9	100%	 ΔF	 -	 40	 Mc/s
i	Grid Insulation Grid Current	V_{dl} = 2750V V_{g_1} = -450V	100%	I_{g_1}	-	40	μA
j	Insulation Resistance (i) Shell to delay line. (ii) Shell to Grid (iii) Shell to Cathode/ Heater. (iv) Shell to Anode	No operating voltages. 4kV d.c. applied between test electrode and shell of valve.	100%	 R_{dl} R_{gl} R_{hk} R_a	 100 100 100 100	 - - - -	 M ohm M ohm M ohm M ohm
k	Life (i) Time (ii) Power Output	Adjust V_{dl} for 33.0 kMc/s. Note 5 and 10	Q.A. and 2%	 t Po	 500 6.5	 - -	 Hour mW

NOTES

1. Vo which must be within the limits 200–450V d.c., must be quoted on the data sheets supplied with each valve. Vo is a single fixed value of Va with which I_k = 10 mA when V_{dl} is set for output at a frequency of 26.5 kMc/s, the other operating conditions being: V_h = 6.3V. I solenoid: as recommended by the manufacturer. V_{g_1} = 0.
2. The solenoid current shall be 9.0 amps (stabilised to within ± 0.05A).
3. The valve must be air-cooled, the air - at ambient temperature - must be fed into the Air Input provided. Air flow should be not less than 25 cu. ft/min.

4. Vibration tests (as agreed with the specifying authority) shall be carried out on the type approval samples, and a note on the performance of the valve under vibration conditions shall be included at a later date for the guidance of users.

5. The frequency shall be set to within $\pm \frac{1}{2}\%$.

6. The manufacturer is to supply, with each valve, a frequency versus delay line voltage (V_{dl}) characteristic covering the range 26.5 - 40.0 kMc/s. There must be no frequency discontinuities over this range.

7. The manufacturer is to supply, with each valve, a power output (Po) versus delay line voltage (V_{dl}) characteristic covering the range of frequencies from 26.5 - 40.0 kMc/s. The power output shall not fall below 10 mW at any point in this range.

8. The manufacturer is to supply, with each valve, a power output (Po) characteristic plotted against anode voltage (0 to Vo) and negative grid 1 voltage (0 to -300V) at the test frequencies 26.5, 33.0 and 40.0 kMc/s.

9. The pulling figure is the difference between the maximum and minimum frequencies recorded when a mismatch, placed in the output section is varied through all phases. The v.s.w.r. of the mismatch shall lie between 1.5 and 1.6 at each microwave frequency, but the manufacturer may, at his discretion exceed a v.s.w.r. of 1.6 during this test.

10. The life of a valve shall be considered to be terminated when, at any frequency in the range 26.5 - 40.0 kMc/s, the power output falls below 6.5 mW, and the valve falls outside any one of limits specified, with the following exceptions:- tests b. c. and d. Po min. shall be 6.5 mW; and Vo, as specified in Note 1, must lie within the limits 200-700 volts d.c. The quantity of valves from production which are to be subjected to life tests, and the procedure to be adopted in the event of failure in life testing, will be decided by the purchasing authority.

(AA1)

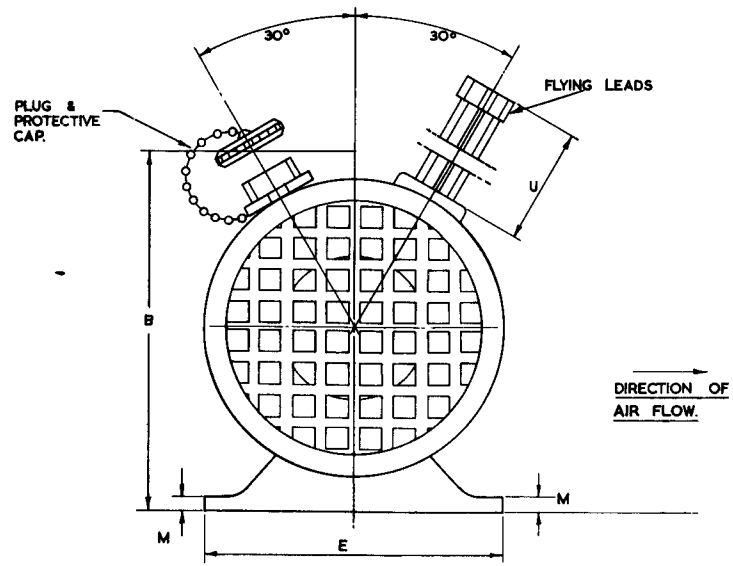

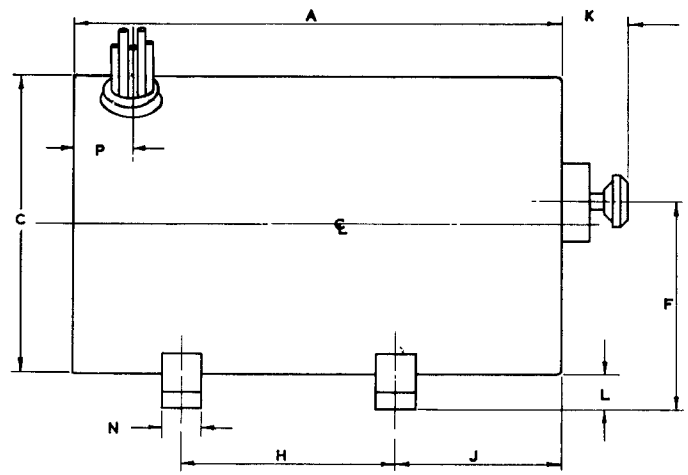

FLYING LEAD CONNEXIONS.

COLOUR MARKER.	ELECTRODE.
BROWN.	HEATER.
YELLOW	HEATER CATHODE.
GREEN.	GRID NO. 1.
BLUE	GRID NO. 2. (ANODE).
RED.	DELAY LINE.

PLUG CONNEXIONS.

PIN. A. SOLENOID AND SOLENOID CASE.
PIN. B. SOLENOID.

OUTLINE DRAWING.

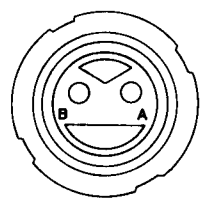

2 PIN PLUG INTER SERVICE CAT. NO. Z 560050.

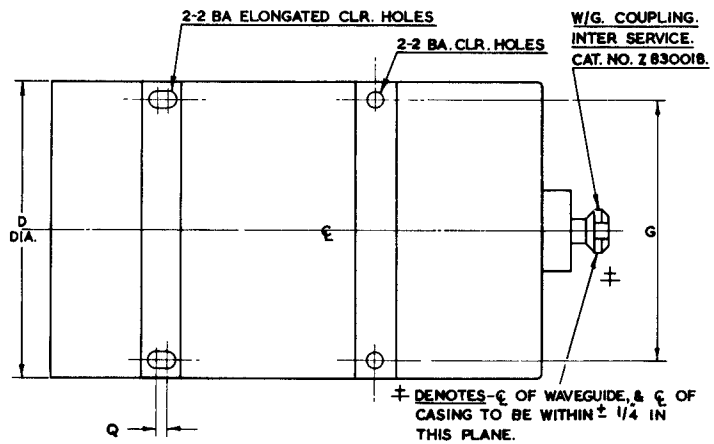

± DENOTES-℄ OF WAVEGUIDE, & ℄ OF CASING TO BE WITHIN ± 1/4 IN THIS PLANE.

NOTE-BASIC DIMENSIONS ARE INCHES.

DIM.	MILLIMETRES	INCHES	DIM.	MILLIMETRES	INCHES
A	225,4 MAX.	8 7/8 MAX.	J	73,0 ± 1,6	2 7/8 ± 1/16
B	155,6 APPROX.	6 1/8 APPROX.	K	27,0 APPROX	1 1/16 APPROX
C	149,2 MAX.	5 7/8 MAX.	L	12,7 ± 1,6	1/2 ± 1/16
D	136,5 MAX. DIA.	5 3/8 MAX. DIA.	M	6,4 ± 0,8	1/4 ± 1/16
E	133,4 ± 0,8	5 1/4 ± 1/32	N	12,7 ± 0,8	1/2 ± 1/32
F	89,7 ± 4,8	3 17/32 ± 3/16	P	25,4 ± 1,6	1 ± 1/16
G	120,65 ± 0,13	4·750 ± 0·005	Q	3,18 ± 0,13	0·125 ± 0·005
H	95,3 ± 1,6	3 3/4 ± 1/16	U	610 APPROX	24 APPROX.

DELAY LINE VOLTAGE VERSUS FREQUENCY

MINISTRY OF ~~AVIATION DLRD/RRE~~ TECHNOLOGY DLRD/RRE

VALVE ELECTRONIC **CV6113**

(AL2)

Specification ~~MOA/CV6113~~ ~~MINISTRY OF TECHNOLOGY DLRD/RRE~~ SPECIFICATION MINTECH/CV6113

Issue 1 Dated 28th January 1964

To be read in conjunction with K1001, BS448 and BS1409

SECURITY

Specification	Valve
UNCLASSIFIED	UNCLASSIFIED

indicates a change

TYPE OF VALVE - Cathode Ray Tube
DEFLECTION - Magnetic
FOCUS - Magnetic
GUN - Tetrode
BULB - Glass. Internal Conductive Coating
SCREEN - 007 (Aluminium backed)
PROTOTYPE - VX1531

MARKING

See K1001/4

BASE

See BS 448. B12A with short metal shell or approved alternative.

RATINGS

(Absolute non-simultaneous and not for Inspectorate)

			NOTES
Heater Voltage	(V)	6.3	
Heater Current	(A)	0.6	A
Max. Anode 1 Voltage	(V)	600	
Min. Anode 1 Voltage	(V)	250	
Max. Anode 2 Voltage	(kV)	15.5	
Min. Anode 2 Voltage	(kV)	9.0	
Max. negative Heater-Cathode Voltage	(V)	150	
Max. Beam Current	(μA)	50	

Typical Operating Conditions

Anode 1 Voltage	(V)	300	
Anode 2 Voltage	(kV)	15	
Max. Grid voltage for cut-off	(V)	-150	
Max. Grid Drive for Ib = 50 μA	(V)	40	

CONNECTIONS

Pin	Electrode	
1	heater	h
2	grid	g
6	no connection	
7	no connection	
10	anode 1	a1
11	cathode	k
12	heater	h
Side contact	anode 2	a2

SIDE CONTACT

See BS448. CT8

DIMENSIONS

See drawing on Page 6

CAPACITANCES

Cg - all (max)	(pF)	12	
Ck - all (max)	(pF)	12	

NOTES

A. The heater may be 0.3A or 0.6A nominal.

B. Screen shall not contain Beryllium.

C. The tube should be operated at its minimum useful brightness in order to prevent damage to the screen material.

D. Joint Services Cat. No. 5960-99-037-3705

GENERAL TEST CONDITIONS

Vh(V)	Vg(V)	Va1(V)	Va2(kV)	Vhk(V)	Focus Coil
6.3	adjust	300	15	0	See Note 7

An interlaced 405 line TV raster of convenient size may be used when required.

K1001 Ref.	TEST	TEST CONDITIONS	AQL %	Insp. Level	Symbol	Limits Min.	Limits Max.	Units
5A.3.1	General Inspection Dimensions	No Voltages. See drawing on Page 6		100%				
5A.3.2.2	Loose Particles	No Voltages		100%				
5A.4.1	Insulation			100%				
5A.4.1.2	Grid Insulation Leakage Current	Vh = 7.0V Vg = - 350V Rg = 3 M.ohms		100%	Ig	-	6	µA
5A.4.1.3	Heater-Cathode Leakage Current	Vh = 7.0V Resistor = 3M ohms						
		Vhk = 175V		100%	Ihk	-	30	µA
		Vhk = -450V		100%	Ihk	-	40	µA
	Heater Current	Note 1		100%	Ih	0.27	0.66	A
5A.4.3	Negative Grid Cut-off Voltage Vg1 A1 Characteristic	No deflection See Note 10		100%	Vg	60	150 Record Vg1	V
5A.4.4	Negative Grid Voltage Vg2	Ib = 50µA Defocussed beam, scanned or deflected off usable screen area. Note 2.11		100%		Record Vg2		V
(A-Q)	Grid Drive Vg1 - Vg2			100%		20	40	V
5A.4.2.1	Maximum Voltage	Va1 = 450 Vg = -300 Va2 = 18kV Focus field as in Focus Test. Preheat Cathode 2 mins. min.		100%		No Breakdown		
5A.4.2.3	Stray Emission	As above. Vg = twice cut off voltage as in Test 5A.4.3		100%		No visible Stray		
	Dark Current	Va1 = 300V Va2 = 18kV Focus field as in Focus Test. Adjust Vg until spot just not visible.		100%	Ia2	-	5	µA

K1001 Ref.	TEST	TEST CONDITIONS	AQL %	Insp. Level	Symbol	Limits Min.	Limits Max.	Units	
	Microphony	Focussed raster. See Note 3		100%					
	Cathode Quality measured as $K = \frac{Ia2}{Vg(cut\ off)\frac{2}{2}}$	Va1 = 300V Va2 = 2kV Vg = 0 Raster		100%	Ia2	measure		µA	(A41)
		Negative Grid cut-off voltage as in test 5A.4.3		100%	K	2	-	$\frac{\mu A}{V}$	
5A.4.5	Gas Test measured as ratio $\frac{Ia2}{Ik}$	Va1 = 200V Va2 = -25V Adjust Vg to give Ik = 400 µA min. Note 4		100%		-	$2x10^{-4}$		
5A.5.7	Focus								
	Astigmatism of undeflected focussed spot	Pulsed Spot Pulse Width = 0.1µSec p.r.f. = 100pps max. mains synchronised. Amplitude Ib = cut-off to 50µA See Note 5		100%		-	20	%	
5A.5.7.2.2	Line Width	Pulsed Line 250mm. Pulse width = 100µS Focus as in Astigmatism test. Modulation pulses and deflection waveform synchronised. Note 9		100%		-	0.2	mm	(A41)
5A.5.7.3	Unfocussed Spot diameter	No deflection or focussing Grid pulsed from cut-off by 100µS of amplitude Vg1 - Vg2. p.r.f. = 25 pps. max.		100%		-	19	mm	
5A.6.3	Useful Screen Area Diameter on geometric centre			100%		250	-	mm	
5A.6.4.2	Displacement of undeflected unfocussed spot from geometric centre of neck projection to screen	Focus off Raster off		100%		-	5	mm	
	Neck Alignment	Note 8		100%		-	5	mm	

K1001 Ref.	TEST	TEST CONDITIONS	AQL %	Insp. Level	Sym-bol	Limits Min.	Limits Max.	Units
5A.5.1.1 and 5A.5.1.2	Screen Efficiency	Va2 = 9kV Vg adjusted to give a light intensity of 0.12 candela using a focussed raster of convenient size Viewed through filter. Wratten No.22		100%	Ib	-	8	µA
5A.5.5	Persistence measured as a decay time to (i) 80% (ii) 15%	No focus field Vg adjusted to give screen luminance of 2 foot-lamberts viewed through Kodak Wratten No.22 Filter or equivalent. Linear raster of convenient size, uniform screen excitation. Excitation time = 120 secs. approx.	2.5	I		 100 -	 400 10	 mS secs
5A.3.5	Blemishes and screen defects	Scan over useful area with defocussed raster of convenient size.		100%				
	No. of blemishes within 80mm dia. circle in useful screen area 0.25mm - 0.75mm 0.75mm - 1 mm					 - -	 10 4	
	Blemishes larger than 1 mm See Note 6						0	
5A.4.6	Capacitances		6.5	IC	Cg-all Ck-all	- -	12 12	pF pF
5A.7.2	Resistance to External Pressure			QA				
5A.3.9	Q.A. Purposes only			QA				
5A.3.7	Holding Period - 7 days Repeat							
5A.4.5	Gas test			100%		-	2×10^{-4}	

CV6113

NOTES

1. The heater current shall not vary by more than 10% from the manufacturers nominal value.

2. The beam current shall increase continuously over the range of grid voltage Vg1 to Vg2.

3. The tube shall be held with the screen horizontal and uppermost. It shall be viewed for 10 seconds in a dark box whilst its neck is tapped with an approved forked rubber covered wooden mallet at a minimum rate of 4 taps per second. There shall be no dark lines or bars on the faintly illuminated screen.

4. This test shall be made not less than 7 days after completion of exhaust process.

5. Measure maximum and minimum axis at tube centre. No axis to be more than 0.2mm. Limits = $\frac{\text{Difference}}{\text{Max.}} \times 100$

6. Blemishes below 0.25mm shall be ignored, except where the separation between them is less than the maximum dimension of the largest blemish in a group.

7. A focus coil of good quality is to be positioned as shown in Drawing on Page 6. A Ferranti Type FC4 is suitable.

8. For deviation of centre of neck from geometric centre of tube face, measure by holding the tube neck between three sets of rollers. One set located near the cone, one set located near the base, and the other a spring loaded set located midway between the other two sets of rollers. The tube is rotated and a circle is described on the tube face, the centre of this circle is the neck projected centre.

9. The microscope used for line width measurement should have a 2" objective and an X7 eyepiece giving an overall magnification of approximately 19.

[redacted] ltage with A1 zero volts shall not exceed 1/7 of [redacted] as in 5A.4.3

[redacted] tube shall carry a label which reads as follows:

"Grid drive (for Ib = 50uA) = ... volts".

(The manufacturer to insert the value of drive voltage for each tube)

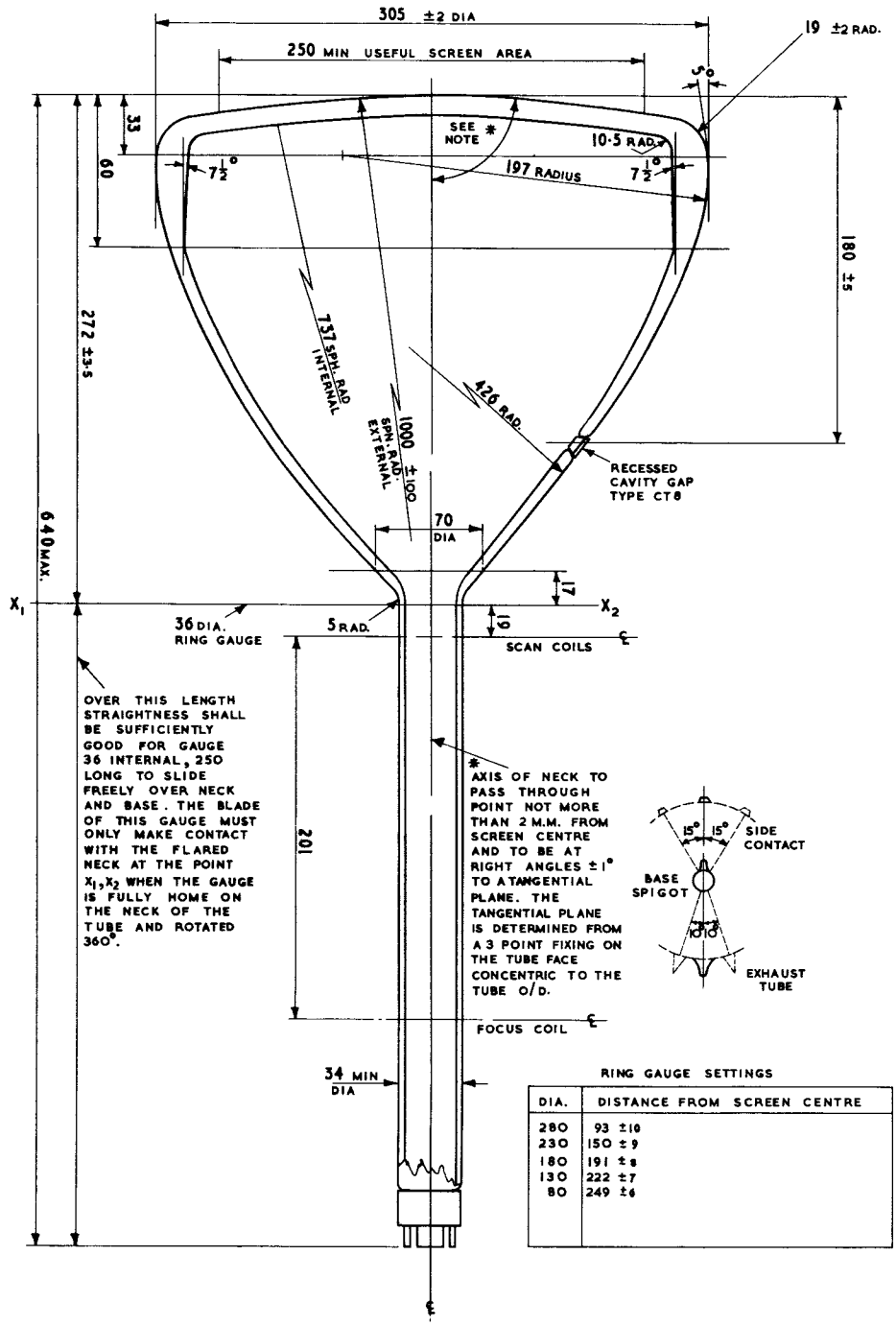

RING GAUGE SETTINGS

DIA.	DISTANCE FROM SCREEN CENTRE
280	93 ±10
230	150 ±9
180	191 ±8
130	222 ±7
80	249 ±6

ALL DIMENSIONS IN MILLIMETRES

MINISTRY OF TECHNOLOGY - DLRD/RRE

VALVE ELECTRONIC **CV6117**

Specification Mintech./CV6117
Issue 1A, Dated June 1968
To be read in conjunction with K1001

SECURITY	
Specification	Valve
Unclassified	Unclassified

→ indicates a change

TYPE OF VALVE - Low modulation noise, S band travelling wave power amplifier

ENVELOPE - Metal Capsule

PROTOTYPE - VX3322

RATINGS AND CHARACTERISTICS

Absolute, non-simultaneous ratings (Notes 1 & 2)
(Not for Inspection purposes)

			Note
Heater Voltage	(V)	3.5 ± 5%	
Max. Heater Current	(A)	8.0	4
Max. Anode Voltage	(kV)	2.5	3
Max. Anode Current	(mA)	1.5	
Max. Helix Voltage	(kV)	2.5	3
Max. Helix Current	(mA)	1.6	
Max. Collector Voltage	(kV)	3.0	2
Max. Collector Current	(mA)	25	

TYPICAL WORKING CONDITIONS

Heater Voltage	(V)	3.5 ± 5%	
Heater Current	(A)	3.5 - 4.5	4
Anode Voltage	(kV)	0.8 - 1.4	3
Anode Current	(mA)	0 - 1.0	
Helix Voltage	(kV)	2.15- 2.45	3
Helix Current	(mA)	0 - 1.5	
Collector Voltage	(kV)	2.4 - 2.6	2
Collector Current	(mA)	22	
V.S.W.R.		-	10
Bandwidth	(GHz)	2.7 - 3.25	6
Min. gain at an input power of 30mw	(dB)	19	7
Max. Thermal noise figure	(dB)	30	
Min. Isolation	(dB)	80	
Max. Noise Factor	(db/Hz)	-156	5,9

MARKING

See K1001/5

BASE

International Octal

CONNECTIONS

Pin	Electrode
1	Heater
2	N.C.
3	omitted
4	Anode
5	N.C.
6	Helix
7	omitted
8	Heater - Cathode
Case	Earthed Collector

DIMENSIONS

See drawing page 8

NOTES

1. Operated in an appropriate solenoid mount Assembly J.S. No. 5950-99-580-0584 as shown on Page 9 The Base end of the mount is centralised and locked by the manufacturer and should not be adjusted. Any focussing necessary for individual tubes should be done with the four screws at the collector end. Adjust for minimum Helix current. Solenoid current is adjusted to 6 amps.

2. All voltages are positive to cathode. The collector is connected to the capsule which is normally earthed. The collector voltage should not under any circumstance be permitted to have a value less than that of the helix voltage.

3. Adjusted in operation.

4. The surge current must not exceed 8 amps.

5. The noise power quoted is that given by a pair of sidebands which may be above or below the carrier frequency.

6. This tube has the specified minimum gain over this bandwidth.

7. The valve is designed for operation without forced air cooling when mounted in a horizontal position at an ambient temperature of 20°C. Cooling is normally effected by Thermal conduction through the base plate, which must be mounted on a suitable heat sink and by Thermal convection from the radiator. When operated in other mounting positions and/or higher ambient temperatures, forced air cooling may be required. The solenoid must be so mounted and cooled that no external part of the Valve Capsule is at a temperature in excess of 140°C.

8. The tube must be operated into an r.f. circuit presenting a v.s.w.r. not greater than 5:1.

9. The noise output is such that the mean sideband to carrier ratio over frequency ranges of 180 ± 50 kHz bandwidth centred 150 ± 5 MHz and 300 ± 5 MHz from the carrier, when taken together, does not exceed - 156 db/c/s bandwidth when the valve is operating with an output of 2.25 ± 0.25W.

10. The v.s.w.r. of the input and output couplers measured with $I_{coll} = 0$ is not greater than 2.0 over the band 2.8 - 3.1 GHz and not greater than 3.0 elsewhere in the band 2.7 - 3.25 GHz.

11. N.A.T.O. Stock Number is 5960 - 99 - 037 - 3208

TESTS

CV6117

To be performed in addition to those applicable in K1001

TEST CONDITIONS: unless otherwise specified:

V_h 3.5V | V_{hel} (Adjust) | V_{coll} 2.4 kV | Va (adjust) | NOTE 1

K1001	Test	Test Condition	AQL %	Insp. Level	Symbol	Limits Min.	Limits Max.	Units
	GROUP A (a) Heater current	No voltages except Vh = 3.5 Note 2		100%		3.5	4.5	A
	(b) Anode Voltage	V_{hel} = 2.3 Increase Va from zero until I_{coll} = 22mA Notes 1 and 3		100%		0.8	1.4	kV
	(c) Anode current	as in(b) Notes 1 and 3		100%		-	1.0	mA
	(d) Helix current	as in(b) Notes 1 and 3		100%		-	1.5	mA
5j6.7	(e) v.s.w.r. (1) Input (2) Output	No voltages. Measured over the frequenoy ranges (a) 2.7 - 2.8 GHz (b) 2.8 - 3.1 GHz (c) 3.1 - 3.25GHz		100%		 - - -	 3.0 2.0 3.0	ratio
	(f) Helix Voltage	Adjust Va from zero until I_{coll} = 22mA Apply signal of r.f. power 30 ± 0.5 mW to the input. Frequency 3250 ± 50 MHz Adjust V_{hel} to give max r.f. power Notes 1 and 3		100%		2.15	2.45	kV

K1001	Test	Test Conditions	AQL %	Insp. Level	Symbol	Limits Min.	Limits Max.	Units
5j6.1 (Meth 1)	(g) r.f. Gain	V_{hel} as obtained in (f) Measured at the following frequencies 2700 ± 20 MHz 3000 ± 20 MHz 3250 ± 20 MHz Notes 1 and 3 Adjust Va from zero until I_{coll} = 22mA Apply a signal of r.f. power 30 ± 0.5 mW to the input		100%		19		dB
	(h) Noise Output as ratio to carrier power	Adjust Va from zero until I_{coll} = 22 mA Apply a signal of r.f. frequency 3045 ± 20 MHz to the input. Adjust level of R.F. input signal until an output of 2.25 ± 0.25 W is obtained with V_{hel} adjusted for max. r.f. output at this level. Notes 1, 3, 4 and 9.		100%			-156	dB/ cycle band-width
5j6.5	(j) Isolation	No voltages. Measure insertion loss at 2.7 MHz and 3.25 MHz, and for each frequency add figure to gain measured in Test (g) at that frequency.		100%		80		dB
5j6.3	(k) Stability	As (g) but with V_{hel} swept ± 50V about this figure. Tube input connector short circuited. The output line shall be mismatched. Notes 1, 3, 5 and 8		100%				µA

TESTS (Contd.)

CV 6117

K1001	Test	Test Condition	AQL %	Insp. Level	Sym-bol	Limits Min.	Limits Max.	Units
	(m) Helix Admittance (i) Negative Capacitance (ii) Susceptance	No voltages. Measured at 148.5MHz ± 2 MHz.		100%	 -C b	 70 0	 10 75	 pF m.mhos
	GROUPS B and C omitted							
	GROUP D (n) Thermal noise figure at sideband frequencies used in test (h)	As in test (h) but without rf signal - The input connector shall be matched Notes 1 and 3		Note 10 4%			30	dB
	(o) r.f. Gain	As in test (g) but measured at 50 MHz interval over frequency range 2.7 - 3.25 GHz commencing at 2700 ± 20 MHz Note 8		10%			3	dB
	GROUP E	Omitted						
	GROUP F (p) LIFE TEST End Point	V_{hel} value as obtained in test (f) Adjust V_a for I_{cell} = 22 mA Notes 1 and 3	Note 11	4%		Note 7		
	GROUP G Electrical tests after a holding period of 14 days r.f. Gain Noise Output	Tests and limits as contained in Group A		100%				

NOTES

1. The valve shall be tested in an approved standard mount equivalent to that shown on page 9. The solenoid current shall be adjusted to a value of 6 amp. All measurements of voltage and current shall be made to the accuracy provided by B.S. 89 Industrial grade instrument.

2. The surge current shall not exceed 8 amps.

3. During adjustment and test the helix current must not exceed 1.6mA

4. The pair of sidebands measured may be above or below the carrier frequency at the option of the manufacturer.

5. The tube input short circuit shall be fixed. The output from the tube shall be coupled via a 20 db directive feed to a short circuit having a 1 db pad in front of it. To increase the sensitivity of measurement an amplifier valve CV5362 shall be fitted in the secondary arm of the directive feed leading to the detector.

   The output from the detector shall be indicated on a galvanometer.

   A calibration curve of the sensitivity of the system over the frequency range 2.7 to 3.3 GHz shall be plotted for a constant 150 uw against galvanometer deflection. The power shall be fed into the cable normally connected to the output of the tube under test.

   The galvanometer reading at the point of lowest sensitivity shall indicate the rejection limit. No spurious output or oscillation shall give a greater deflection.

   Before each batch of tubes to be tested, the calibration shall be checked by feeding in a signal of 150 uw at 3 GHz and adjusting the galvanometer sensitivity to give the correct reading as indicated on the curve.

   The sensitivity of the system over the full range of 2.7 to 3.3 GHz shall be checked after each 20 valves tested.

6. Measurement to be taken after ten minutes.

7. <u>End of Life Conditions</u>

   The life test end point shall be 1000 hours or
   (a) When the valve fails test (b) contained in Group A. or
   (b) When the gain at 2.0 watts output falls below 18 dB at the specified frequencies given in test (g) contained in Group A. or
   (c) When the noise output is more than 3 dB worse than the specified limit given in test (h) contained in Group A.

   Where the life test is terminated because of either (a) (b) or (c) above the number of hours over which the valve operated satisfactorily shall be recorded.

8. Expressed as variation in gain obtained over the specified frequency band. The variation in gain over any measured 100 MHz shall not exceed 1.5 dB.

9. Measured as mean sideband to carrier ratio over frequency ranges of 180 ± 50 kHz bandwidth centred 150 ± 5 MHz and 300 ± 5 MHz from the carrier, when taken together.

NOTES

10. The tests contained in Group D shall be performed on a sampling basis consisting of the specified percentage of the contract requirement (taken to the nearest whole number in excess of the percentage value) and spread evenly over the production period. Samples used shall be taken from those values in current production at the time of commencement of the test.

In the case of test (o) r.f. Gain the sample size shall be 10% or one per month whichever is the greater.

During continuous production (which for the purpose of this specification shall be considered as being production which has not been interrupted for a period in excess of six calendar months) the criterion of acceptance shall be based on not more than one failure in any ten consecutive samples tested and shipment of valves may be permitted from the commencement of a contract provided that rejection of earlier production lots had not occurred.

Following a six months non-production period, shipment may be permitted after the first sample satisfies the specified tests, but in the event of an early failure, before the criterion of acceptance can be applied, the Manufacturer shall test at least two further samples made at the time of the failure.

If neither samples fail acceptance then shipment is permitted, but in event of an additional failure 100% Inspection shall be instituted and the Approval Authority informed. Where 100% Inspection has been incurred the results of all valves tested shall be supplied to the Approval Authority and shall continue until the Authority is satisfied that the cause offailure has been removed.

11. The criterion of acceptance shall be that the average life expectancy at 1000 hours shall be at least 90% where

$$\text{Life Expectancy} = \frac{\text{Total hours of life operation}}{\text{Total possible hours}} \times 1000$$

If the life expectancy falls below 90% the Approval Authority shall be informed and the valves made during the relevant period held pending investigation and agreements as to disposal.

In the event of a failure which would incur rejection under this criterion the manufacturer may substitute a further sample from the current production, in which case the Approving Authority shall be informed as to the cause of failure of the replaced valve. Should the second valve fail the valves made during the relevant period shall be held pending investigation.

VALVE OUTLINE

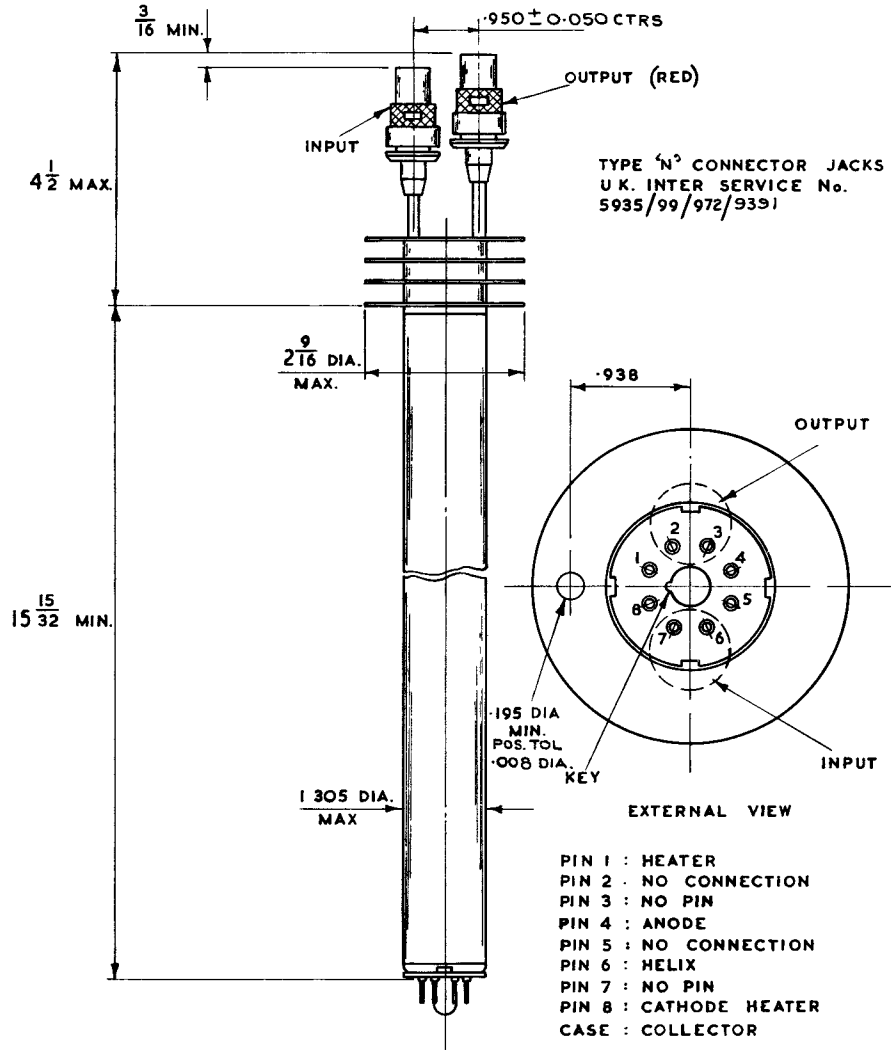

THIS DRAWING COVERS PRESENT MANUFACTURING PRACTICE. APPARATUS EMBODYING THIS TYPE MUST BE CONSIDERED IN THE LIGHT OF POSSIBLE VALVE STOCKS OF EARLIER DESIGN.

DIMENSIONS IN INCHES SCALE 1:2 & FULL SIZE

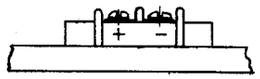

SCRAP VIEW ON ARROW 'X'
SCALE 1·1

ITEM.	PART.	FINISH
G	BASE.	PLAIN ANODISE TO D.T.D. 910 & STOVE ENAMEL DARK B/SHIP GREY TO B.S. 381C TINT 632.
F	CLAMPS.	ANODISE TO D.T.D. 910 & STOVE ENAMEL DARK B/SHIP GREY TO B.S. 381C TINT 632.
E	SCREWS.	CAD. PLATE D.T.D. 904 PASSIVATE D.T.D. 923.
D	COOLING FIN.	ANODISE TO D.T.D. 910 & STOVE ENAMEL DARK B/SHIP GREY TO B.S. 381C TINT 632.
C	CLAMP BANDS.	CADMIUM PLATE & STOVE ENAMEL DARK B/GREY TO B.S. 381C TINT 632.
B	END PLATE.	CHROMIUM PLATE & POLISHED.
A	MOUNT.	NICKEL PLATE POLISHED BRIGHT.

OPERATING CURRENT 6 AMPS. MAX. CURRENT 8 AMPS.
OPERATING VOLTAGE 24 VOLTS. APPROX. MAX. VOLTAGE 32 VOLTS.

SOLENOID MOUNT OUTLINE.

ALL DIMENSIONS IN INCHES. SCALE HALF FULL SIZE.

VALVE ELECTRONIC

ADMIRALTY SURFACE WEAPONS ESTABLISHMENT

CV6127

Specification AD/CV6127 Issue No. 1A dated 28th July, 1964 To be read in conjunction with K1001	SECURITY	
	Specification	Valve
	Unclassified	Unclassified

TYPE OF VALVE: Travelling-wave tube limiter

CATHODE: Indirectly heated

ENVELOPE: Glass

PROTOTYPE: VX7161

MARKING

See K1001/4

BASE

Special: Pin spacing as for B9A
See drawing on page 7

RATING

All limiting values are absolute

			Note
Heater Voltage	(V)	6.3	
Heater Current	(A)	0.45	
Max. Grid 2 Voltage	(V)	230	D
Max. Helix Voltage	(V)	230	D
Max. Collector Voltage	(V)	330	D
Max. Helix Current	(μA)	100	
Max. Collector Current	(μA)	350	

TYPICAL OPERATING CONDITIONS

			Note
Grid 2 Voltage	(V)	20 to 140	A,D
Helix Voltage	(V)	170 to 220	B,D
Collector Voltage	(V)	300	
Helix Current	(μA)	0 to 10	
Collector Current	(μA)	125 to 320	
Frequency Range	(Mc/s)	2500 to 4100	
Small Signal Gain	(dB)	11 to 23	
Max. Working Saturated Power output	(μW)	500	E
Min. Working Saturated Power output	(μW)	60	E
Focusing Field Strength (nom)	(oersteds)	440	C
Noise factor (nom)	(dB)	16	

CONNECTIONS

Pin	Electrode	
1	Helix and Grid 3	hel
2	Grid 2	g2
3	I.C.	
4	Heater	h
5) 6) 7)	Heater-Cathode-Grid 1	h,k,g1
8	I.C.	
9	I.C.	
End Cap	Collector	Col

DIMENSIONS

See drawing on Page 7

MOUNTING POSITION

ANY
(see note F on page 2)

OPERATING TEMPERATURE

See note G on page 2.

WEIGHT

Valve only 1¼ ozs.
Solenoid only
(see note J on page 2) 12¼ lbs.

NOTES

A. This electrode draws very low current (less than 10 μA) Grid 2 voltage must not exceed helix voltage.

B. Voltage adjusted for optimum value at 3300 Mc/s.

C. When operated in the approved circuit (No. 495-LWA-007) the current in the field coils giving this field strength is 10 amps.

D. All voltages are relative to the cathode. The collector is normally earthed.

E. The saturated power obtained at synchronous helix potential. The maximum saturated power refers to the output at 23 dB gain. The minimum saturated power is for a collector current of 125 μA.

F. The valve will operate in any position with suitable fixing arrangements on the mount.

G. During operation the solenoid temperature must not be allowed to exceed that value at which the solenoid resistance is 1.25 times the cold resistance measured in an ambient temperature of 20°C. This implies forced air cooling if the ambient temperature exceeds 30°C.

H. A set of operating data (including setting-up procedure) is supplied with each valve.

J. The preferred solenoid (495-LWA-007) is not supplied with the valve.

K. When mounting the valve in the approved circuit it is advantageous to give the valve a slight clockwise rotation to ease its entry. The valve should then be rotated in the same direction until the valve and circuit markings are aligned.

→ L. The valve gain will not vary by more than $\pm \frac{1}{2}$ dB when subjected to a vibration acceleration of 1g over the frequency range 5 c/s - 30 c/s. It will operate satisfactorily after application, in any direction, of 20g peak square-shaped shock pulses with a 6 m sec. base. The performance after application of 30g shocks is marginal.

M. Valve NATO Stock No. 5960-99-037-3506

Solenoid NATO Stock No. 5950-99-972-1105

TESTS

To be performed in addition to those applicable in K1001.

Tests are to be performed in the specified order unless otherwise agreed with the Inspecting Authority.

Test Conditions - unless otherwise stated:-

V_h (V)	V_{hel} (V)	$V_{col.}$ (V)	$I_{col.}$ (μA)	Solenoid current
6.3	200	300	125	10 amps.

K	Test	Test Conditions	AQL %	Insp. Level	Symbol	Limits		Units
						Min.	Max.	
a	Heater Current	No voltages except V_h No magnetic field Note 1.		100%	I_h	0.37	0.63	A
b	Grid 2 Voltage	Notes 2 and 3		100%	V_{g2}	20	100	V
c	Helix Current	V_{g2} = Value obtained in test b. Note 2.		100%	I_{hel}	-	50	μA
d	Helix Voltage	V_{g2} = value obtained in test b. Notes 2 and 4.		100%	V_{hel}	170	220	V
e	Small signal gain.	V_{g2} = value obtained in test b. V_{hel} = value obtained in test d. Notes 2, 6 and 11.		100%		11	20	dB
f	Working Saturated Power output	V_{g2} = value obtained in test b. V_{hel} = value obtained in test d. Notes 2 and 10.		100%		-12	-4	dBm
g	Helix Voltage at 23 db Gain.	V_{g2} = Adjust V_{hel} = Adjust Notes 2 and 7		100%	V_{hel}	170	220	V
h	Grid 2 Voltage at 23 dB Gain.	V_{g2} = Adjust V_{hel} = Value obtained in test g Notes 2 and 8		100%	V_{g2}	20	140	V
j	Collector Current to obtain 23 dB Gain.	V_{g2} = Adjust V_{hel} = Value obtained in test g. Notes 2 and 8.		100%	I_{col}	-	320	μA

K	Test	Test Conditions	AQL %	Insp. Level	Symbol	Limits Min.	Limits Max.	Units
k	Gain Variation	V_{g2} = value obtained in test h. V_{hel} = value obtained in test g. I_{col} = value obtained in test j. Notes 2, 9 and 11.		100%		- Variation	5	dB
l	Spurious Oscillations	V_{g2} = Adjust V_{hel} = Value obtained in test g. Notes 2 and 5.		100%		No oscillations should be detected.		
m	Cold Attenuation	Measured at a frequency of 3300 Mc/s No voltages. No magnetic field. Notes 2 and 11.		100%		45	-	dB
n	Life	Notes 2 and 3			Note 14			
p	Operational Vibration	Acceleration = 1g Frequency Range 6 c/s to 30 c/s. V_{hel} = value obtained in test g. V_{g2} adjusted to give value of I_{col} obtained in test j. Notes 2 and 12.		T.A.			Gain variation ± 1	dB
q	Shock	Peak Acceleration = 20g. Duration of shock = 6 m secs. No voltages Note 13.		T.A.		Valve must satisfy test clauses (a) to (m) after shock test.		

NOTES

1. The heater current shall be read at least three minutes after switching on.

2. These tests shall be performed in a solenoid (495-LVA-007) which has been approved by the Type Approving Authority by comparison with the reference standard held by that Authority.

3. Adjust the grid 2 voltage to obtain a collector current of 125 μA.

4. Adjust helix voltage for maximum small signal gain at 3300 Mc/s, with an input power not greater than -40 dBm.

5. The value of collector current obtained in test k is increased by 10% by adjusting grid 2, and the helix voltage swept by a 50 c/s voltage of r.m.s. value 30V, about the value obtained in test d. The R.F. output against helix voltage characteristic is examined on an oscilloscope, with an r.f. input of less than -40 dBm. The characteristic should be a smooth curve with a maximum at the optimum helix voltage, and should decrease and increase as the input level is decreased and increased. Any oscillation present will give an output which does not decrease with input level or discontinuities in the otherwise smooth trace.

6. Small signal gain shall be measured at 2500, 3000, 3300, and 4100 Mc/s with an input not greater than -40 dBm.

7. Vary the collector current by adjusting the grid 2 voltage to obtain a small signal gain of 23 dB at 3300 Mc/s, with the helix voltage adjusted for maximum gain at this frequency. The input level shall not be greater than -40 dBm.

8. Vary the collector current by adjusting the grid 2 voltage to obtain a small signal gain of 23 dB at 3000 Mc/s. The input level shall not be greater than -40 dBm.

9. The small signal gain shall be measured at 2500, 2700, 3300, 3600, 3900 and 4100 Mc/s with the collector current set at the value obtained in test j. The input shall not be greater than -40 dBm in each case. The difference between any two readings shall not be greater than 5 dB.

10. The working saturated power output shall be measured at 2500, 3000, 3300 and 4100 Mc/s.

11. At Type Approval, measurements shall be taken at intervals of 100 Mc/s over the band 2500 to 4100 Mc/s.

12. The frequency of vibration shall be varied through the range in steps of 1 c/s, at 1 minute intervals. The R.F. input, at a frequency of 4100 Mc/s and a level adjusted to give an output at least 5 dB below the saturated output at that frequency, shall be modulated with a square-wave pulse, the output being detected and displayed on an oscilloscope. The variation in gain shall be measured with the direction of vibration a) perpendicular to the valve axis and b) parallel to the valve axis.

13. The valve alone shall be subjected to 6 shocks in each of 3 directions (a) perpendicular to valve axis, (b) parallel to valve axis in direction of collector and (c) parallel to valve axis in direction of base. The shock pulse shall be approximately rectangular in shape with a peak acceleration of 20g and a width (at 50% of peak height) of 6 m secs.

The sample size shall be as follows:-

Lot size	Sample size
1 - 25	1
26 - 50	2
51 - 150	3
151 - or greater	2%

The manufacturer may test additional samples at his discretion. For the first lot of any production order, deliveries shall be held until satisfactory completion of a minimum of 250 hours life. Where previous life test data is available deliveries may be released at the discretion of the Inspection Authority. Thereafter, where previous results have proved satisfactory shipment of valves may be permitted without awaiting results of current tests.

For the purpose of this test the life of a valve shall be considered terminated when the performance of the valve falls outside any one of the test limits specified below:-

Test	Limits		Units
	Min.	Max.	
a	.37	.63	A
b	18	160	V
c	-	100	μA
d	160	230	V
e	Small signal gain must not be more than 3 dB below that measured at 0 hours.		
f	-13	-3.5	dBm
g	160	230	V
h	18	V_{helix} in test g.	V
j	-	350	μA
k	-	Variation 6.5	dB
l	No oscillations should be detected.		
m	-	40	dB

The target sample average life is 500 hours. In the event of a sample failure the Approving Authority must be informed. Shipments will only be stopped upon notification from the Approving Authority.

CV6127

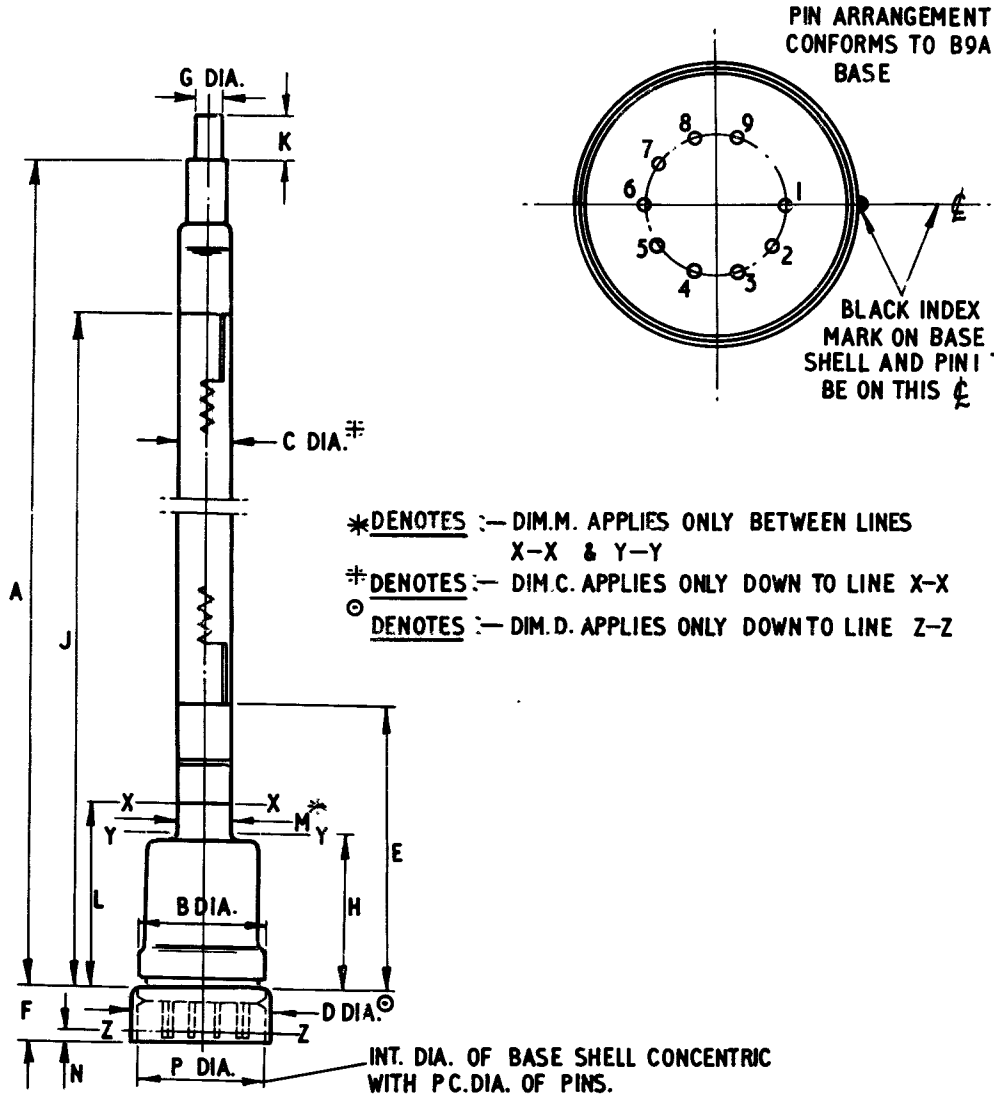

DIM.	MILLIMETRES	INCHES	DIM.	MILLIMETRES	INCHES
A	177·34 ± 0·63	6·982 ± 0·025	G	5·99 ± 0·18	0·236 ± 0·007
B	23·24 MAX.	0·915 MAX.	H	24·13 MAX.	0·950 MAX.
C	9·27 MAX.	0·365 MAX.	J	149·86 ± 0·38	5·900 ± 0·015
D	25·30 ± 0·18	0·996 ± 0·007	K	7·62 ± 0·76	0·300 ± 0·030
E	48·26 ± 0·89	1·900 ± 0·035	L	27·56 MAX.	1·085 MAX.
F	10·16 ± 0·63	0·400 ± 0·025	H	9·60 MAX.	0·378 MAX.
P	22·22 MIN	0·875 MIN	N	1·59 MAX.	0·063 MAX.

NOTE:— BASIC FIGURES ARE INCHES

CV6127

VALVE ELECTRONIC

ADMIRALTY SURFACE WEAPONS ESTABLISHMENT

Specification AD/CV6127 Issue No. 1 dated 2nd September, 1963. To be read in conjunction with K1001	SECURITY Specification: Unclassified Valve: Unclassified

TYPE OF VALVE: Travelling-wave tube limiter

CATHODE: Indirectly heated

ENVELOPE: Glass

PROTOTYPE: VX 7161

RATING
(All limiting values are absolute)

			Note
Heater Voltage	(V)	6.3	
Heater Current	(A)	0.45	
Max. Grid 2 Voltage	(V)	230	D
Max. Helix Voltage	(V)	230	D
Max. Collector Voltage	(V)	330	D
Max. Helix Current	(μA)	100	
Max. Collector Current	(μA)	350	

TYPICAL OPERATING CONDITIONS

Grid 2 Voltage	(V)	20 to 140	A,D
Helix Voltage	(V)	170 to 220	B,D
Collector Voltage	(V)	300	
Helix Current	(μA)	0 to 10	
Collector Current	(μA)	125 to 320	
Frequency Range	(Mc/s)	2500 to 4100	
Small Signal Gain	(dB)	11 to 23	
Max. Working Saturated Power output	(μW)	500	E
Min. Working Saturated Power Output	(μW)	60	E
Focusing Field Strength (nom)	(oersteds)	440	C
Noise factor (nom)	(dB)	16	

MARKING
See K1001/4

BASE
Special: Pin spacing as for B9A
See drawing on page 7

CONNECTIONS

Pin	Electrode	
1	Helix and Grid 3	hel
2	Grid 2	g_2
3	I.C.	
4	Heater	h
5)		
6)	Heater-Cathode-Grid 1	
7)		h,k,g_1
8	I.C.	
9	I.C.	
End Cap	Collector	Col

DIMENSIONS
See drawing on Page 7

MOUNTING POSITION
ANY
(see note F on page 2)

OPERATING TEMPERATURE
(see note G on page 2)

WEIGHT
Valve only 1½ ozs.
Solenoid only
(see note J on page 2) 12¾ lbs.

NOTES

A. This electrode draws very low current (less than 10μA).
Grid 2 voltage must not exceed helix voltage.

B. Voltage adjusted for optimum value at 3,300 Mc/s.

C. When operated in the approved circuit(No. 495-LVA-007) the current in the field coils giving this field strength is 10 amps.

NOTES (Contd.)

D. All voltages are relative to the cathode. The collector is normally earthed.

E. The saturated power obtained at synchronous helix potential. The maximum saturated power refers to the output at 23 dB gain. The minimum saturated power is for a collector current of 125 μA.

F. The valve will operate in any position with suitable fixing arrangements on the mount.

G. During operation the solenoid temperature must not be allowed to exceed that value at which the solenoid resistance is 1.25 times the cold resistance measured in an ambient temperature of 20°C. This implies forced air cooling if the ambient temperature exceeds 30°C.

H. A set of operating data (including setting-up procedure) is supplied with each valve.

J. The preferred solenoid (495 LVA-007) is not supplied with the valve.

K. When mounting the valve in the approved circuit it is advantageous to give the valve a slight clockwise rotation to ease its entry. The valve should then be rotated in the same direction until the valve and circuit markings are aligned.

L. The valve gain will not vary by more than $\pm \frac{1}{2}$ dB when subjected to a vibration acceleration of 1g over the frequency range 5 c/s - 30 c/s. It will operate satisfactorily after application, in any direction, of 20g peak triangular-shaped shock pulses with a 12 m sec. base. The performance after application of 30g shocks is marginal.

M. The Joint Services Catalogue number is 5960-99-037-3506.

CV6127

TESTS

To be performed in addition to those applicable in K1001. Tests are to be performed in the specified order unless otherwise agreed with the Inspecting Authority.

Test Conditions - unless otherwise stated

V_h (V)	V_{hel} (V)	V_{col} (V)	I_{col} (μA)	Solenoid current
6.3	200	300	125	10 amps

	Test	Test Conditions	AQL %	Insp. Level	Symbol	Limits Min.	Limits Max.	Units
a	Heater Current	No voltages except V_h No magnetic field Note 1		100%	I_h	0.37	0.63	A
b	Grid 2 Voltage	Notes 2 and 3		100%	V_{g2}	20	100	V
c	Helix Current	V_{g2} = Value obtained in test b Note 2		100%	I_{hel}	-	50	μA
d	Helix Voltage	V_{g2} = Value obtained in test b Notes 2 and 4		100%	V_{hel}	170	220	V
e	Small signal gain	V_{g2} = Value obtained in test b V_{hel} = Value obtained in test d Notes 2, 6 and 10		100%		11	20	dB
f	Working Saturated Power output	V_{g2} = Value obtained in test b V_{hel} = Value obtained in test d Notes 2 and 9		100%		-12	-4	dBm
g	Helix Voltage at 23 dB Gain	V_{g2} = Adjust V_{hel} = Adjust Notes 2 and 7		100%	V_{hel}	170	220	V
h	Grid 2 Voltage at 23 dB Gain	V_{g2} = Adjust V_{hel} = Adjust Notes 2 and 7		100%	V_{g2}	20	140	V
j	Collector Current to obtain 23 dB Gain	V_{g2} = Adjust V_{hel} = Adjust Notes 2 and 7		100%	I_{col}	-	320	μA

	Test	Test Conditions	AQL %	Insp. Level	Symbol	Limits Min.	Limits Max.	Units
k	Gain Variation	V_{g2} = value obtained in test h. V_{hel} = value obtained in test g. I_{col} = value obtained in test j. Notes 2, 8 and 10.		100%	Gain Variation	-	± 5	dB
l	Spurious Oscillations	V_{g2} = Adjust V_{hel} = Value obtained in test g. Notes 2 and 5.		100%		No oscillations should be detected.		
m	Cold Attenuation	Measured at a frequency of 3300 Mc/s. No voltages. No magnetic field. Notes 2 and 10.		100%		45	-	dB
n	Life	Notes 2 and 3.				Note 13		
p	Operational Vibration	Acceleration = 1g Frequency Range 6 c/s to 30 c/s. V_{hel} = value obtained in test g. V_{g2} adjusted to give value of I_{col} obtained in test j. Measured at a frequency of 4100 Mc/s. Notes 2, 8 and 11.		Q.A.	Gain Variation		± 1	dB
q	Shock	Peak Acceleration = 20g Duration of shock = 12m secs. No voltages Note 12.		Q.A.		Valve must satisfy test clauses (a) to (m) after shock test		

CV6127

NOTES

1. The heater current shall be read at least three minutes after switching on.

2. These tests shall be performed in a solenoid (495-LVA-007) which has been approved by the Qualification Approving Authority by comparison with the reference standard held by that Authority.

3. Adjust the grid 2 voltage to obtain a collector current of 125 μA.

4. Adjust helix voltage for maximum small signal gain at 3300 Mc/s, with an input power not greater than -40 dBm.

5. The value of collector current obtained in test k is increased by 10% by adjusting grid 2, and the helix voltage swept by a 50 c/s voltage of r.m.s. value 30V, about the value obtained in test "d". The R.F. output against helix voltage characteristic is examined on an oscilloscope, with an r.f. input of less than -40 dBm. The characteristic should be a smooth curve with a maximum at the optimum helix voltage, and should decrease and increase as the input level is decreased and increased. Any oscillation present will give an output which does not decrease with input level or discontinuities in the otherwise smooth trace.

6. Small signal gain shall be measured at 2500, 3000, 3300, and 4100 Mc/s with an input not greater than -40 dBm.

7. Vary the collector current by adjusting the grid 2 voltage to obtain a small signal gain of 23dB at 3000 Mc/s, with the helix voltage set to obtain maximum gain at 3300 Mc/s. The input level shall not be greater than -40 dBm.

8. The small signal gain shall be measured at 2500, 2700, 3300, 3600, 3900 and 4100 Mc/s with the collector current set at the value obtained in test j. The input shall be not greater than -40 dBm in each case. The difference between any two readings shall not be greater than 5 dB.

9. The working saturated power output shall be measured at 2500, 3000, 3300 and 4100 Mc/s.

10. At Qualification Approval, measurements shall be taken at intervals of 100 Mc/s over the band 2500 to 4100 Mc/s.

11. The frequency of vibration shall be varied through the range in steps of 1 c/s, at 1 minute intervals. The R.F. input shall be modulated with a square-wave pulse, the output being detected and displayed on an oscilloscope. The variation in gain shall be measured with the direction of vibration, (a) perpendicular to the valve axis, and (b) parallel to the valve axis.

12. The valve alone shall be subjected to 6 shocks in each of 3 directions, (a) perpendicular to valve axis, (b) parallel to valve axis in direction of collector, and (c) parallel to valve axis in direction of base. The shock pulse shall be approximately triangular in shape with a peak acceleration of 20g and a base width of 12 m secs.

1?/ over

13 The sample size shall be as follows:-

Lot size	Sample size
1 - 25	1
26 - 50	2
51 - 150	3
151 - or greater	2%

The manufacturer may test additional samples at his discretion. For the first lot of any production order, deliveries shall be held until satisfactory completion of a minimum of 250 hours life. Where previous life test data is available deliveries may be released at the discretion of the Inspection Authority. Thereafter, where previous results have proved satisfactory shipment of valves may be permitted without awaiting results of current tests.

For the purpose of this test the life of a valve shall be considered terminated when the performance of the valve falls outside any one of the test limits specified below:-

Test	Limits		Units
	Min.	Max.	
a	.37	.63	A
b	18	160	V
c	-	100	µA
d	160	230	V
e	Small signal gain must not be more than 3dB below that measured at 0 hours		
f	- 13	- 3.5	dBm
g	160	230	V
h	18	V helix in test g.	V
j	-	350	µA
k	-	Variation 6.5	dB
l	No oscillations should be detected.		
m	-	40	dB

The target sample average life is 500 hours. In the event of a sample failure the Qualification Approval Authority must be informed. Shipments will only be stopped upon notification from the Qualification Approval Authority.

CV6127

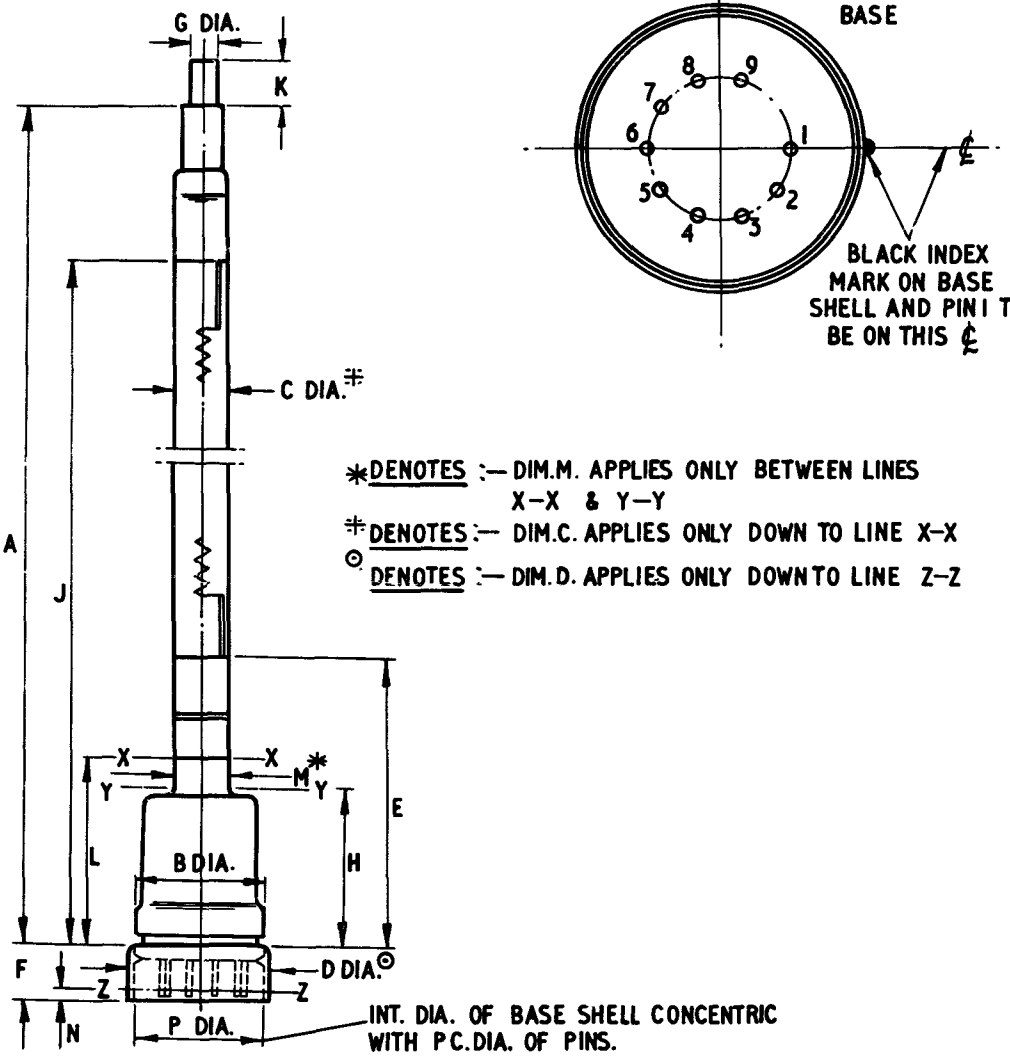

*DENOTES :— DIM.M. APPLIES ONLY BETWEEN LINES X–X & Y–Y

⁂DENOTES :— DIM.C. APPLIES ONLY DOWN TO LINE X–X

⊙ DENOTES :— DIM.D. APPLIES ONLY DOWN TO LINE Z–Z

DIM.	MILLIMETRES	INCHES	DIM.	MILLIMETRES	INCHES
A	177·34 ± 0·63	6·982 ± 0·025	G	5·99 ± 0·18	0·236 ± 0·007
B	23·24 MAX.	0·915 MAX.	H	24·13 MAX.	0·950 MAX.
C	9·27 MAX.	0·365 MAX.	J	149·86 ± 0·38	5·900 ± 0·015
D	25·30 ± 0·18	0·996 ± 0·007	K	7·62 ± 0·76	0·300 ± 0·030
E	48·26 ± 0·89	1·900 ± 0·035	L	27·56 MAX.	1·085 MAX.
F	10·16 ± 0·63	0·400 ± 0·025	H	9·60 MAX.	0·378 MAX.
P	22·22 MIN	0·875 MIN	N	1·59 MAX.	0·063 MAX.

NOTE:— BASIC FIGURES ARE INCHES

THIS VALVE MAY BE RADIO ACTIVE (Note E)

MINISTRY OF [redacted] TECHNOLOGY (MINTECH) – DLRD/RRE

VALVE ELECTRONIC CV6129

Specification [redacted]/CV6129 Issue 1A Dated 8th April 1964 To be read in conjunction with K1001	SECURITY Specification: Unclassified Valve: Unclassified

← Indicates a change

TYPE OF VALVE: Microwave Gas Switch (Plug-in type T.R. Cell)

ENVELOPE: Metal and Glass

PROTOTYPE: VX3293

MARKING

See K1001/4

DIMENSIONS

See Drawing, Page 6

MOUNTING POSITION

Any

PACKING

See K1005

RATINGS AND CHARACTERISTICS

(Not for inspection purposes)

All limiting values are absolute			Note
Operating frequency range	(kMc/s)	2.6-3.9	C
Max. peak r.f. power	(kW)	5	A
Min. peak r.f. power	(W)	10	B

NOTES

A. At a duty cycle of 0.002. For use above max power level it should be used in conjunction with power limiter of CV2430 type or equivalent.

B. This power level is the minimum at which the valve will fire consistently when followed by a matched load.

C. Operating Frequency Range

The valve is designed to operate in No. 10 or No. 11 waveguide and the mount must be chosen to suit the desired operating frequency band. Chokes are provided on the valve.

A typical mount for No. 11 Waveguide (Mount A), is shown on page 7 and for No.10 Waveguide (Mount B), on page 8. The iris width will decrease and Q value will increase with increasing frequency. Higher Q values can be obtained using double irises and lower Q values by using a small ridge in the waveguide.

D. Joint Services Catalogue Number 5960-99-037-3518

E. Nominal Radio activity ~~3200~~ 100 micro curies (Tritium)

Typical Performance (See Note vii)

		MOUNT A	MOUNT B	NOTES
Centre frequency	(Mc/s)	3620	3265	
Loaded Q Value		6.0	4.5	(i)
Insertion Loss	(dB)	0.12	0.15	(ii)
Spike leakage energy	(e/p)	11	45	(ii) (iii) (iv)
Flat break through peak power	(W)	-	2.0	(ii) (iii) (iv)
Total leakage energy at 0.8 usecs pulse	(e/p)	32	-	(ii) (iii) (iv)
Recovery time to 6 dB	(μsecs)	17	15	(ii) (iii) (v)
Firing Power	(W)	1.7	4.0	(ii) (vi)

NOTES

(i) Q value. This is the Q of the cell in its mount when loaded with a matched guide in both directions. To calculate Q the v.s.w.r. of the mount terminated in a matched load is plotted as a function of frequency. The Q is then deduced from the formula:-

$$Q_L = \frac{1 - r}{2\sqrt{r}} \times \frac{f_o}{f_2 - f_1}$$

where r = v.s.w.r. (less than 1) within the range 0.5 to 0.6 at which f1 and f2 are quoted.

(ii) Measured at the nominal centre frequency

(iii) Measured with a peak incident r.f. power of 5 kW.

(iv) Calculated as given in Note 5 on page 4

(v) See Note 6 on page 5.

(vi) See Note 2 on page 5

(vii) The valve is intended for use in a conventional duplexer in front of a primed gap or, if leakage power requirements are less stringent, may be used solely with pre TR or other unprimed gap.

TESTS

To be performed in addition to those applicable in K1001

Valves should be held for a period of at least seven days after manufacture before commencing tests.

TEST CONDITIONS:- Unless otherwise stated

Freq (Mc/s) 3620 ± 50

K1001	Test	Test Conditions	AQL %	Insp. Level	Symbol	LIMITS Min.	LIMITS Max.	Units
	GROUP A							
	(a)							
5H. 4.1.6	Centre frequency OF RANGE WITH IN V.S.W.R. OF 0.75 ± 0.05.	The line shall be energised with 20 ± 10 mW r.f. power and terminated in an impedance matched better than 0.98 v.s.w.r. Note 1		100%		3600	3645	Mc/s
	(b)							
5H. 4.1.3	V.S.W.R. Determined with the line terminated in a matched load.	As test (a) f = 3620 Mc/s ± 3 Mc/s Note 1		100%		0.89	-	ratio
	(c)							
5H. 4.1.1	Insertion loss	f = 3620 Mc/s ± 3 Mc/s The line shall be energised with 20 ± 10 mW r.f. power and the valve mounted between impedances matched better than 0.91 v.s.w.r. Note 1		100%		-	0.20	dB
	(d)							
5H. 4.2.8	Firing Power	Increase r.f. power input slowly until cell fires. Notes 1, 2 and 3		100%		-	10	W
5H.	(e) High Power leakage	The line shall be energised with 5 ± 1kW peak r.f. power and the valve mounted between impedances matched better than 0.91 v.s.w.r. Pulse length						
1.14.3	Spike leakage	(i) 0.1 µsec. min				-	13.5	e/p
1.14.2	Total leakage	(ii) 0.9 ± 0.1 usec Notes 1, 4 and 5				-	36	e/p

K1001	Test	Test Conditions	AQL %	Insp. Level	Symbol	LIMITS Min.	LIMITS Max.	Units
5H. 4.2.5.1	(f) Recovery Time	Conditions as in Test (e) Pulse Length = 0.9 ± 0.1 µsecs Frequency of simulated echo 3620 ± 10 Mc/s Notes 1 and 6		100%			24	µsecs
	GROUPS B, C, D and E omitted							
5H. 5.3	GROUP F (g) Life Test	Note 7 The valve shall be mounted on the side-arm of a matched T-junction Incident peak power = 5 ± 1kW. p.r.f. = 500 p.p.s. ± 50 p.p.s. t_p = 2 µSecs ± 0.2µSecs or alternatively:- p.r.f. = 1200 p.p.s. ± 100 p.p.s. t_p = 0.1 µSec ± 0.1 µSecs		See Note 10				
	Life Test end-point 1000 hours	Note 8						
	(i) Centre Frequency					3595	3680	Mc/s
	(ii) v.s.w.r.					0.85		
	(iii) Insertion Loss						0.25	dB
	(iv) Firing Power						20.0	W
	(v) High Power leakage							
	Spike energy						15	e/p
	Total energy						44	e/p
	(vi) Recovery Time						50	µsecs

NOTES

1. The valve shall be tested in Mount A shown on Page 7.

2. The valve shall be tested in the line between terminations matched better than 0.91 v.s.w.r. The firing power is that power present in the line when the cell breaks down.

3. This test to be carried out before tests (e) and (f).

4. Measured with a thermistor head having a band width not less than 350 Mc/s at a v.s.w.r. of 0.67 and centred at the magnetron frequency.

5. If the measured mean leakage powers are p1 and p2 microwatts respectively then:

$$\text{Spike Leakage} = \frac{10p1}{\text{p.r.f.}} \quad \text{ergs/pulse}$$

$$\text{Total leakage energy} = \frac{10p2}{\text{p.r.f.}} \quad \text{ergs/pulse}$$

6. The time shall be measured from the trailing edge of the transmitter pulse for an insertion loss 6dB greater than that immediately before the transmitter pulse.

7. The Valve shall be tested in Mount B on page 8.

8. The post life tests shall be made under the conditions given in tests a, b, c, d, e and f, and the relaxed limits as stated shall apply.

9. These conditions apply to production Life testing.

10. The number of valves to be life tested shall be not less than 4% of the contract quantity. The tests shall be performed at regular intervals during the contract production period. Cells placed on test shall be representative of those produced at the time the test commences.

The criterion for acceptance shall be that there shall not be more than one failure in any ten consecutive samples tested. During the initial period of any contract following a non-production period exceeding six months, valves may be dispatched without awaiting the accumulation of the ten samples provided that the results of tests made do not preclude acceptance under the criterion. Where rejection is incurred, shipment shall cease and the Approval Authority shall be informed.

OUTLINE DRAWING

THIRD ANGLE PROJECTION

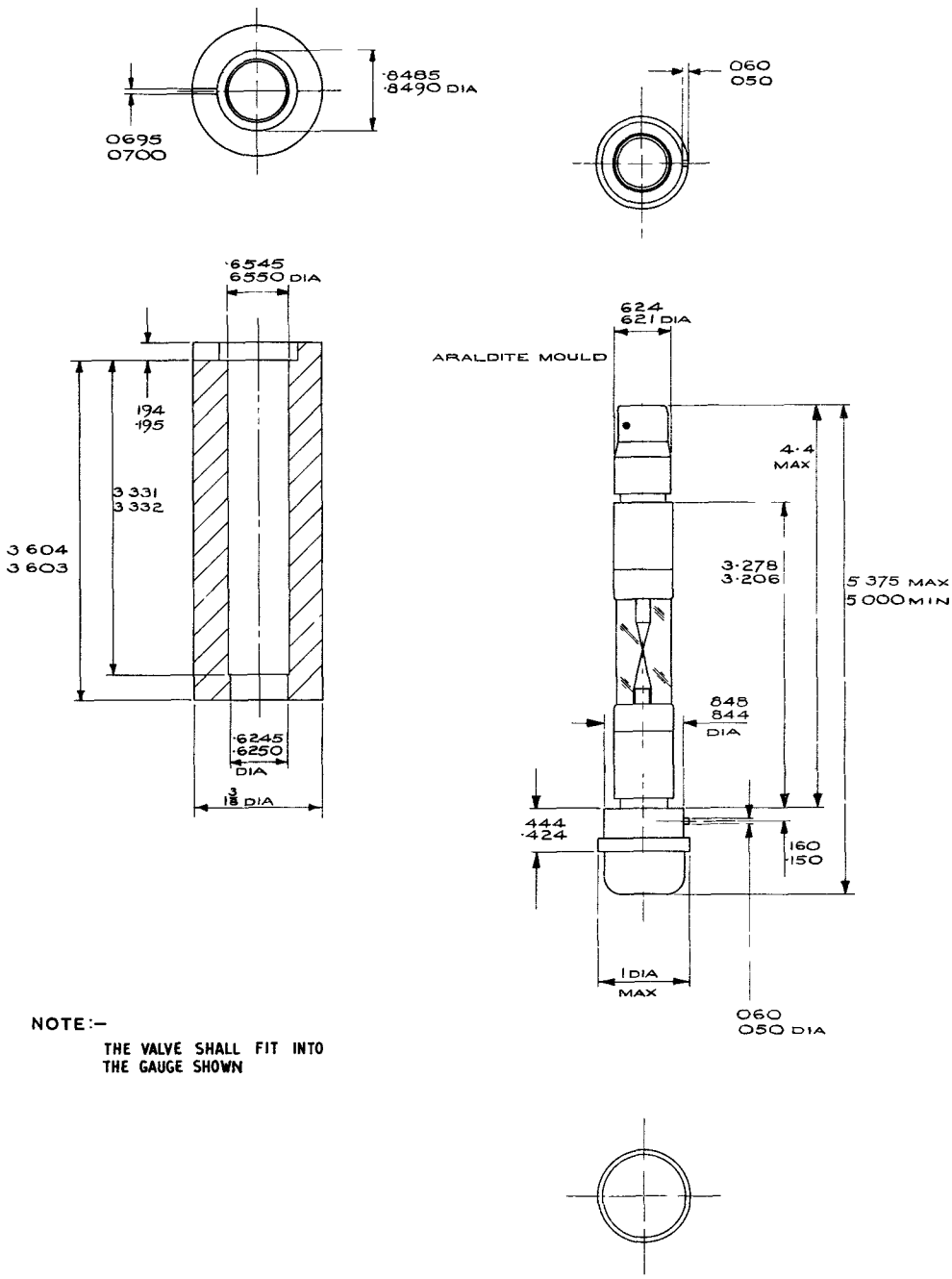

NOTE:–

THE VALVE SHALL FIT INTO THE GAUGE SHOWN

ALL DIMENSIONS IN INCHES

FIG. 2

TEST MOUNT "A"

(THIRD ANGLE PROJECTION)

DIMENSIONS IN INCHES

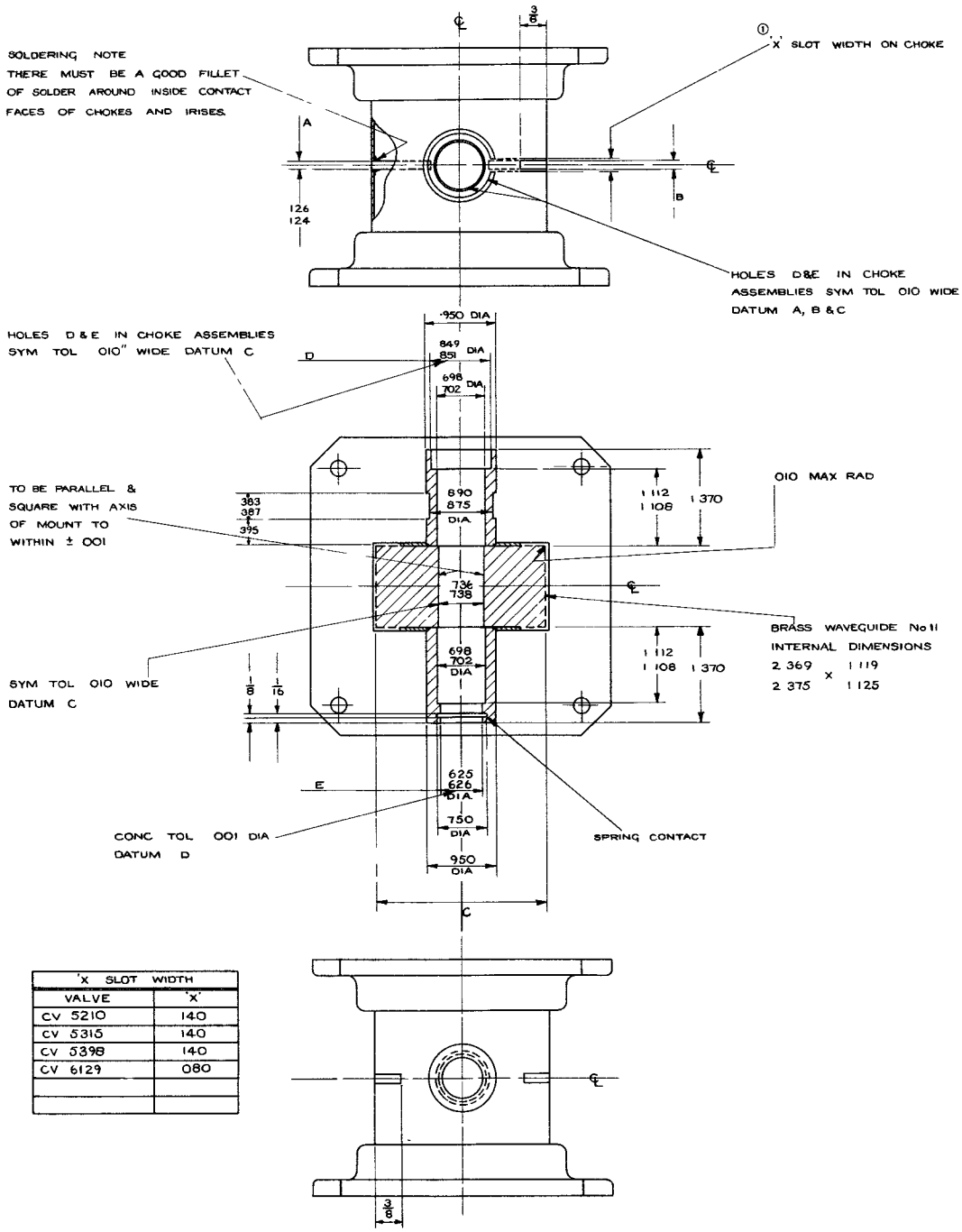

'X' SLOT WIDTH	
VALVE	'X'
CV 5210	140
CV 5315	140
CV 5398	140
CV 6129	080

FIG. 3

TEST MOUNT B

(THIRD ANGLE PROJECTION)

DIMENSIONS IN INCHES

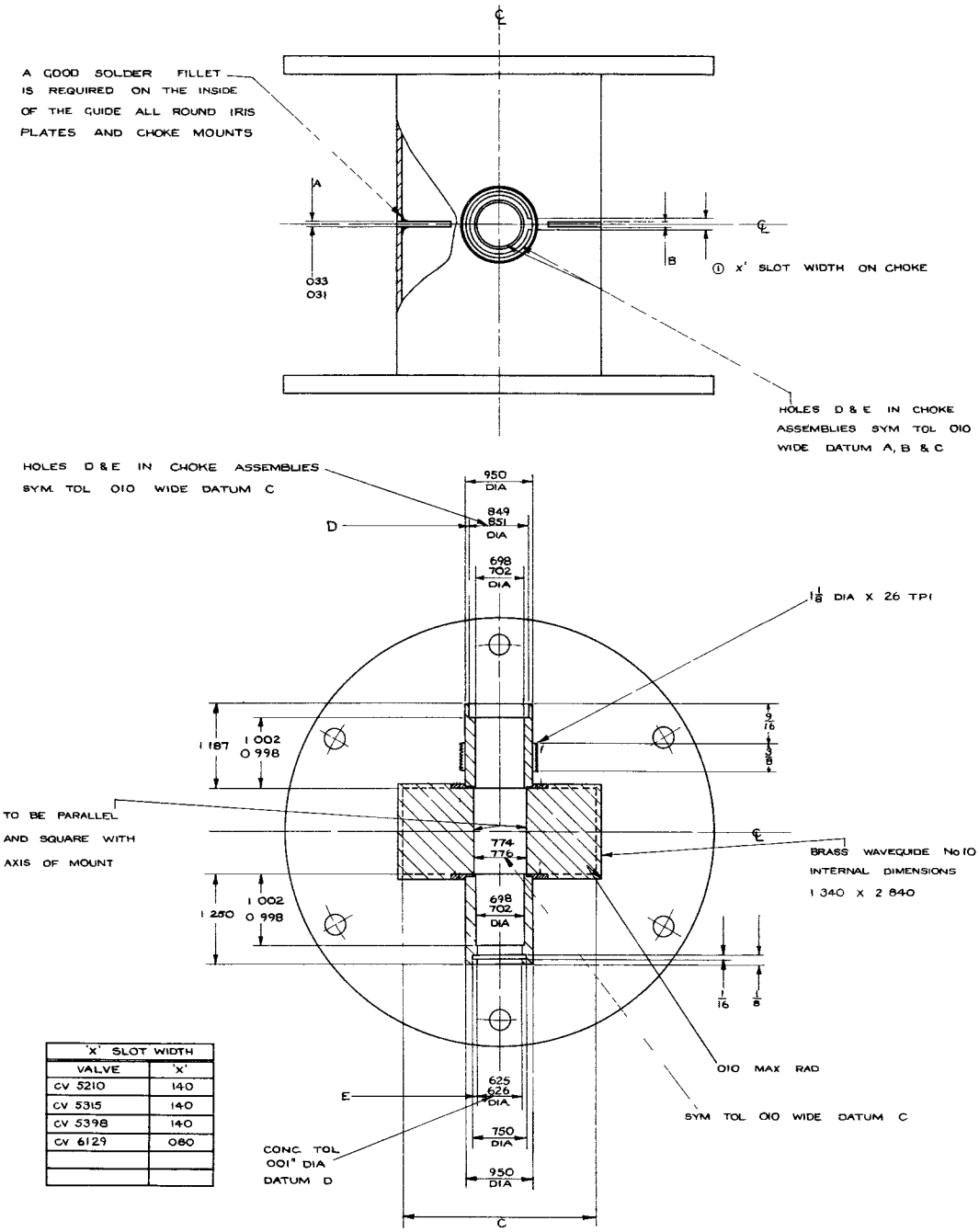

'X' SLOT WIDTH	
VALVE	'X'
CV 5210	140
CV 5315	140
CV 5398	140
CV 6129	080

Ministry of ~~[illegible]~~ DLRD/RRE
MINISTRY OF TECHNOLOGY.

VALVE ELECTRONIC CV6132

Specification MOA/CV6132 Issue No. 1A Dated 8th April 1965 To be read in conjunction with K1001 and BS1409	SECURITY	
	Specification	Valve
	Unclassified	Unclassified

→ Indicates change

TYPE OF VALVE: Broad-band T.R. Cell

PROTOTYPE: CV2307

MARKING

See K1001/4

RATINGS AND CHARACTERISTICS
(Absolute, non-simultaneous and not for Inspectorate)

DIMENSIONS & CONNECTIONS

See Drawing on Page 6

			Note
Operating Frequency	(Mc/s)	8500 to 9100	
Max. Peak Power	(kW)	200	A.B
Min. Peak Power	(kW)	4	
Primer Supply Voltage	(V)	-1000	
Max. Primer Current	(μA)	150	C

NOTES

A. Operation at this power level results in considerably reduced life. For satisfactory operation at power levels above 50 kW, it is recommended that the valve be preceded by a Pre-T.R. valve.

B. With duty ratio not exceeding 0.001.

C. Primer current to be limited by a series resistance of 5.5 Megohms of which at least 0.5 megohms must be placed adjacent to the valve.

D. NATO Stock number: 5960-99-037-3590

(278498)

TESTS

To be performed in addition to those applicable in K1001

Section 5H

TEST CONDITIONS: unless otherwise specified primer supply voltage = -1000v

K1001 Ref. 5H		Test	Test Condition	AQL %	Insp. Level	Sym-bol	Limits Min.	Limits Max.	Units
3.1.1	a	Primer Breakdown The delay between application of primer voltage and initial breakdown to be measured.	Primer supply voltage to be -900v. Test to be performed at least 7 days after any previous discharge.		100%	t_i	-	5	s
3.1.2	b	Primer Operating Current The primer current to be measured after breakdown has occurred.	As for test "a"		100%	I_d	75	150	µA
4.1.3.1	c	VSWR VSWR to be measured at frequencies: 8500, 8800 and 9100 Mc/s.	Line to be energised with not more than 10 mW RF power and terminated in a load matched better than 1.02 VSWR.		100%	-	-	1.2	-
4.1.1.1	d	Low Level Insertion Loss Measured at frequencies: 8500, 8800 and 9100 Mc/s.	Valve to be mounted between impedances matched better than 1.1 VSWR. Line to be energised with not more than 10 mW RF power.		100%	αp	-	0.8	dB
4.2.4	e	High Power Leakage	Line to be energised using 50kW ± 10% peak RF power with PRF = 1000 c/s ± 10% terminated in a matched load. Test frequency: 8800 Mc/s ± 100 Mc/s.				See Page 3		

CV6132

TESTS (Cont'd)

K1001 Ref. 5H		Test	Test Condition	AQL %	Insp. Level	Symbol	Limits Min.	Limits Max.	Units
4.2.4.2.1 (Cont'd)	e	1. Spike energy	tp1 = 1.0 µS ± ± 10% tp2 = .15 µS ± ± 10%		100%	Wαs	-	0.2	ergs/ pulse
4.2.4.1		2. Total Leakage power	tp = 1.0 µS ± ± 10%		100%	Pα	-	100	mW
4.2.5	f	Recovery Time The time to be measured from the trailing edge of the applied pulse until the insertion loss has fallen to a value 3 dB above its value immediately before the pulse is applied.	tp = 1 µS ± 10% Other conditions as in test "e"		100%	tdα	-	2	µS
4.2.4.4	g	Low Power Leakage The peak total leakage through the valve is to be measured as the applied power is varied.	Applied peak RF power varied from 100 mW to 100 Watts. tp = 1 µS ± 10% Other conditions as in test "e" (Note 5)	6.5	I	PαL	-	250	mW
4.2.7	h	Position of Short The distance of the effective RF short circuit behind the front flange of the valve is to be measured.	tp = 1 µS ± 10% Other conditions as in test "e" (Note 5)	6.5	I	1	0.014	0.028	in

TESTS (Cont'd)

K1001 Ref 5H		Test	Test Condition	AQL %	Insp. Level	Sym-bol	Limits Min.	Limits Max.	Units
4.2.2	j	Arc Loss	Line to be energised with 4 kW peak RF power measured immediately after the valve. tp = 1 μS ± 10%. Other conditions as in test "e" Note 2		Q.A.	(A)α arc	-	0.8	dB
5.2.3	k	Temp Cycling Post Temperature Cycling Tests	The valve shall be stored at 100°C for one hour and followed by one hour at room temperature and one hour at -40°C, this cycle to be repeated six times. Tests and limits as contained in (a) and (b) Note 4		4.0%				
5.3	l	Life Test Valves to be run for 1000 hours. Tests "b" to "f" to be performed at 0.100, 200 300, 750 and 1000 hours.	The valves to be mounted on E-Plane T junctions followed by a matched load. Input power not exceeding 30 kW. Output power not less than 20 kW. Other conditions as in test "e" 2. Note 3 and 4		4.0%		See Note 5		

NOTES

1. Where the rate of production is low a batch size may be considered as being that obtained over a period of one month. The manufacturer may at his discretion test more valves than that quoted.
2. Maintenance of Q.A. quality to be agreed with the manufacturer.
3. A further six sample valves to be provided by the manufacturer for Q.A. life tests.
4. The tests shall be performed on a sampling basis consisting of the specified percentage of the contract requirement (taken to the nearest whole number in excess of the percentage value) and spread evenly over the production period. Samples used shall be taken from those values in current production at the time of commencement of the test.

/During

CV 6132

During continuous production (which for the purpose of this specification shall be considered as being production which has not been interrupted for a period in excess of six calendar months) the criterion of acceptance shall be based on not more than one failure in any ten consecutive samples tested and shipment of valves may be permitted from the commencement of a contract provided that rejection of earlier production lots had not occurred.

Following a six months non-production period, shipment may be permitted after the first sample satisfies the specified tests, but in the event of an early failure, before the criterion of acceptance can be applied, the Manufacturer shall test at least two further samples made at the time of the failure.

If neither samples fail acceptance then shipment is permitted, but in event of an additional failure the Approval Authority shall be informed.

5. End of life will be indicated by failure to pass any of the b, c, d, e, f tests with the following relaxations of limits:-

(c) VSWR Max. 1.4
(d) Insertion Loss Max. 1.5 dB.
(e) Spike Energy 0.25 ergs/pulse max.
(f) Recovery Time 10 dB at 4 μs

OUTLINE DRAWING
(THIRD ANGLE PROJECTION)

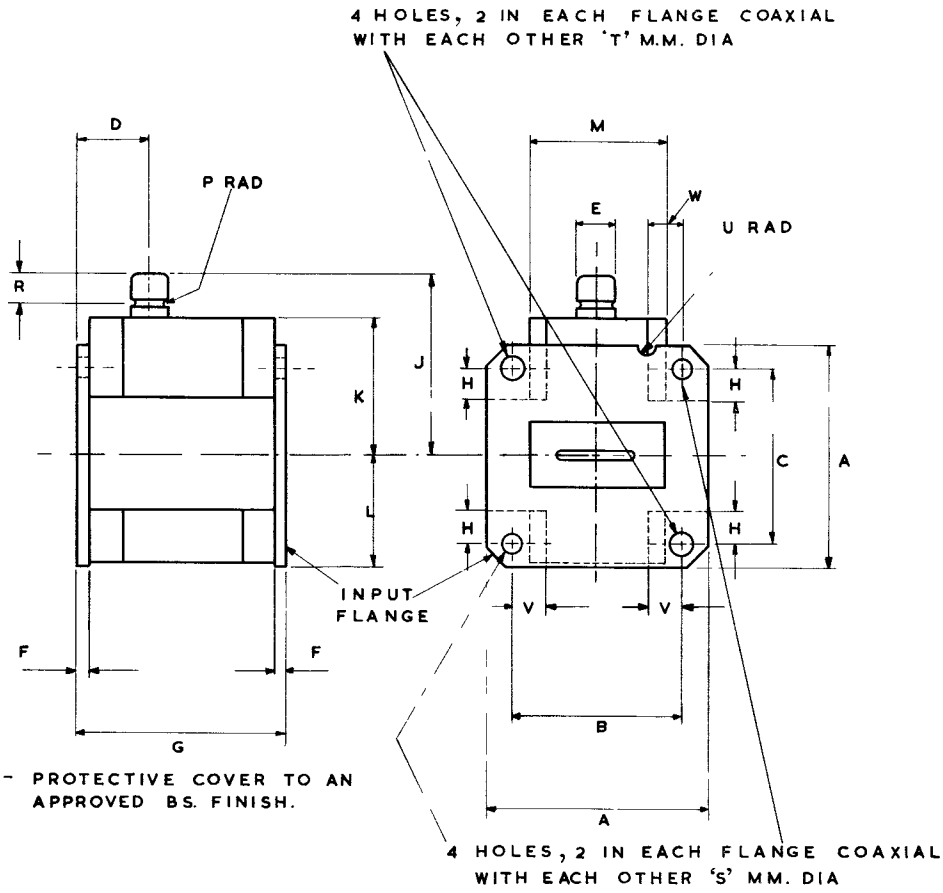

FINISH :- PROTECTIVE COVER TO AN APPROVED BS. FINISH.

REF.	MIN.	NOM	MAX	REF.	MIN	NOM	MAX
A	–	1 5/8	–	L	–	–	53/64
B	1·216	–	1·224	M	–	–	1
C	1·276	–	1·284	P	–	0·030	–
D	–	17/32	–	R	–	0·170	–
E	–	0·250	–	S	3·7 MM	–	3·9 MM
F	3/32	–	1/8	T	4·2 MM	–	4·4 MM
G	1·553	–	1·557	U	1/32	–	3/32
H	3/16	–		V	7/32	–	
J	1·11/32	–	1·13/32	W	0·225	–	0·245
K	–	–	1·125	–			

DIMENSIONS IN INCHES UNLESS OTHERWISE STATED

MINISTRY OF AVIATION DLRD(T) R.R.E.

VALVE ELECTRONIC **CV6142**

Specification MOA/CV6142 Issue 1 Dated 17th June 1965 To be read in conjunction with K1001 & BS448	SECURITY	
	Specification	Valve
	Unclassified	Unclassified

Type of valve: Velocity modulated oscillator
Cathode: Indirectly Heated
Prototype: RVTS 0031. K391/A

RATINGS AND CHARACTERISTICS

(Absolute, non-simultaneous and not for Inspectorate)

			Note
Heater Voltage	(V)	6.3	
Heater Current	(A)	0.565	
Max. Resonator Voltage	(V)	400	
Max. Resonator Dissipation	(W)	20	
Reflector Voltage Range	(V)	140-200	A B
Min.r.f. Power Output	(mW)	40	
Mechanical Tuning Range	(Mc/s)	8805 - 8885	C
Typical Electrical Tuning Rate @ Mode centre	(Mc/s/V)	0.9	
Typical Mechanical Tuning Rate	(Mc/s/°)	1.0	
Min. Electronic Tuning Range	(Mc/s)	30	
Max. Total Impedance in the Reflector cathode circuit	(Mohms)	0.5	

MARKING
See K1001/4

BASE
Flying leads

CONNECTIONS
See Drawing Page 4

MOUNTING POSITION
Any

PACKAGING
See K1005

DIMENSIONS
See Page 4

ALTITUDE
80,000 feet

NOTES

A. Each valve shall be marked with the reflector voltage at which the valve will oscillate and give a power output of at least 40 mW over the whole band.

B. The Reflector voltage must always remain negative with respect to cathode. If during AFC working there is any possibility that the reflector voltage will become equal to or more positive than the cathode a protective diode should be incorporated.

C. Clockwise rotation of the tuner decreases frequency.

D. Joint Services Catalogue No:- 5960-99-037-4077

Test conditions unless otherwise stated

V_h (V)	V_{res} (V)	V_{ref} (V)	Freq (Mc/s)
6.3	350		8845 ± 20

Adjust to give maximum Power Output

K1001 Ref. 5B	Test	Test Condition	AQL %	Insp. Level	Symbol	Limits Min.	Limits Max.	Units
	GROUP A			100%				
3.1.1	Heater Current				I_h	0.52	0.61	Amps
	Power Oscillation (1)							
4.1	r.f Power Output				P_{out}	40	-	mW
	Resonator Current				I_{res}	20	38	mA
	Reflector Voltage				V_{ref}	140	200	V
	Power Oscillation (2)	At any frequency in the band 8805 to 8885 Mc/s not less than 20 Mc/s from the centre frequency.						
4.1	r.f. Power Output				P_{out}	40	-	mW
	Reflector Voltage				V_{ref}	140	200	V
4.2.6	Electronic Tuning Range				Δf	30	-	Mc/s
	Vibration Frequency Modulation	25 to 1000 c/s at 10g swept at rate of 1 Oct/min Note 1.			Δf	-	100	kc/s
	GROUP B		6.5	II				
3.4	Emission	V_h = 5.7 Volts Note 2.			ΔI_{res}	-	10	%
4.3.1.1	Negative Temperature Coefficient	Over any 30°C range within the overall temperature range -20°C to +70°C				50	200	Kc/s/°C
1.1.3	Warm up Test	Note 3			ΔP_{out}	-	± 1	dB
					Δf	-	10	Mc/s
	GROUP C		6.5	I				
4.4.1	N.F. Noise	Note 5				-	4×10^{-14}	W/Mc/s/mW
	Tracking Factor	Measured over frequency 8805 to 8885 Note 4.				-	2	Mc/s

GROUPS D and E Omitted

TESTS (Cont'd)

K1001 Ref. 5B	Test	Test Conditions	AQL %	Insp. Level	Symbol	Limits Min.	Limits Max.	Units
	GROUP F							
	Life test					1000	-	Hours
	Life test end points							
	r.f. Power Output				P_{out}	40	-	mW
	Reflector Voltage				V_{ref}	140	200	V
	GROUP G							
	Retest after 14 days holding period	Tests and Limits as in Group A						

NOTES

1. The vibration test shall be performed with the valve attached by its waveguide flange to an approved mount. The valve shall be vibrated with sinusoidal excitation in the direction of the electron beam.

2. The Heater Voltage shall be lowered from 6.3 to 5.7 volts and after a minimum period of 2 minutes the Resonator current shall not have decreased by more than 10% from the value obtained at 6.3 Volts.

3. Measurements shall be within the given limits in a period of time not exceeding 2 minutes following the application of all voltages.

4. Reflector voltage for mode optimum shall be plotted as a function of the angular position of the tuning shaft over the frequency range 8805 to 8885 Mc/s. The tracking error is defined as the product of the voltage deviation of this plotted curve from the straight line drawn through the two voltages corresponding to 8805 and 8885 Mc/s and the corresponding electronic tuning rate sensitivity at the measuring point; the tracking error being expressed in Mc/s.

5. The rf noise is defined as the sum of the rf noise powers in two channels 40 Mc/s above and below the frequency of oscillation compared with the thermal noise at 290°K in the same channels.

   The recommended noise standard is the CV 1881. The noise power is to be expressed in watts per megacycle of IF bandwidth per milliwatt of power output.

CV6142

OUTLINE DRAWING
(THIRD ANGLE PROJECTION)

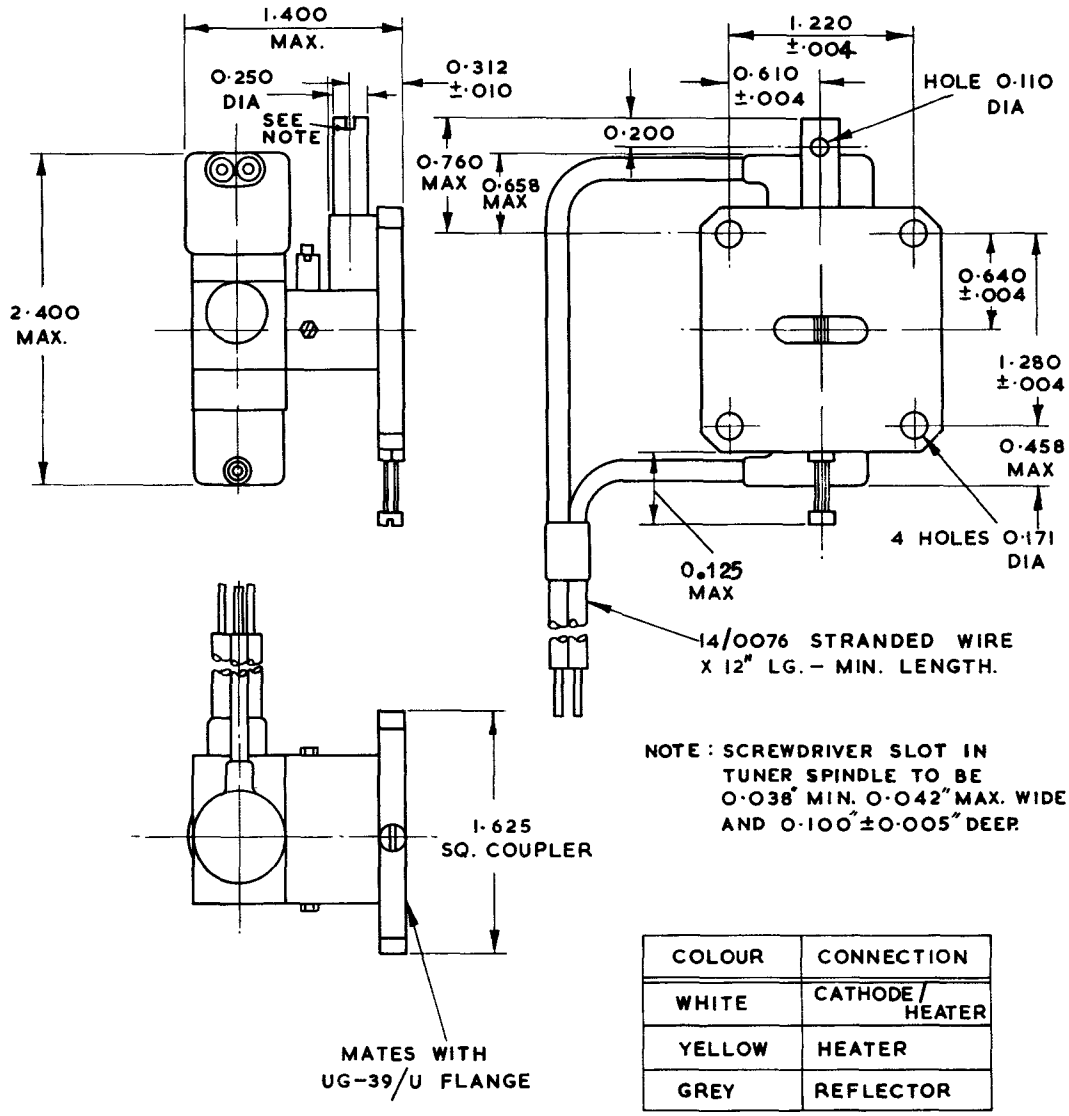

NOTE : SCREWDRIVER SLOT IN TUNER SPINDLE TO BE 0·038" MIN. 0·042" MAX. WIDE AND 0·100" ±0·005" DEEP.

COLOUR	CONNECTION
WHITE	CATHODE / HEATER
YELLOW	HEATER
GREY	REFLECTOR

DIMENSIONS IN INCHES

ADMIRALTY SURFACE WEAPONS ESTABLISHMENT

VALVE ELECTRONIC CV6157

Specification AD/CV6157
Issue No. 1 dated November 1967
To be read in conjunction with K1001

SECURITY

Specification	Valve
Unclassified	Unclassified

TYPE OF VALVE: S-band travelling wave tube power amplifier with low modulation noise.

CATHODE: Indirectly heated

ENVELOPE: Metal capsule

PROTOTYPE: VX3290

MARKING

See K1001/4

BASE

B.S.448/B80

RATINGS
(All limiting values are absolute and non-simultaneous)

			Note
Heater Voltage	(V)	3.5	
Max. Heater Current	(A)	4.5	F
Max. Grid 1 Voltage	(kV)	2.5	A B
Max. Grid 1 Current	(mA)	1.5	A
Max. Helix Voltage	(kV)	2.7	A B
Max. Helix Current	(mA)	1.5	A
Max. Collector Voltage	(kV)	3	A B
Max. Collector Current	(mA)	20	A

CONNECTIONS

PIN	ELECTRODE	
1	Heater	h
2	N.C.	
3	Omitted	
4	Grid 1	g1
5	N.C.	
6	Helix	hel
7	Omitted	
8	Heater/Cathode	h,k
Case	Collector/Earth	Col

TYPICAL OPERATING CONDITIONS H

Heater Voltage	(V)	3.5	
Heater Current	(A)	3.5-4.5	
Grid 1 Voltage	(kV)	0.5-1.0	A B
Grid 1 Current	(mA)	0-1.0	A
Helix Voltage	(kV)	2.0-2.3	A B
Helix Current	(mA)	0-1.0	A
Collector Voltage	(kV)	2.0-2.5	A B
Collector Current	(mA)	14-16	A
Min. Working Saturated Power Output	(W)	0.5	G
Frequency Range	(GHz)	2.5-4.1	
Min. Gain at a Power Output of 0.5 watts	(dB)	20	
Max. Noise Factor	(dB)	30	
Min. Insertion Loss	(dB)	25	

DIMENSIONS

See drawing on page 6

MOUNTING POSITION

Any (but see Note D re cooling)

WEIGHT

Valve only: $2\frac{1}{8}$ lbs

Valve in solenoid mount assembly $43\frac{3}{4}$ lbs (See Note J)

NOTES

A. These figures are for operation in the approved solenoid mount assembly (see Note 2 on Page 4) and adjusted for minimum helix current. The minimum solenoid current required to focus the electron beam is 4 Amps when valve and mount are aligned for minimum helix current by means of the adjusting screws on the solenoid. The max. solenoid current is 8 Amps and the solenoid operating voltage is 16 volts (approx.). Max. voltage 32 volts. All voltages are positive relative to the cathode. The collector is connected to the capsule which is normally earthed. The helix voltage should never exceed the collector voltage.

NOTES (CONT'D)

B. Adjusted in operation.

C. The v.s.w.r. of the output and input couplers, measured when I col = 0 is not greater than 3:1. The valve must be operated in an r.f. circuit presenting a v.s.w.r. not greater than 5:1.

D. The valve is designed for operation without forced air cooling when mounted in a horizontal position at an ambient temperature of 20°C. Cooling is normally effected by thermal conduction through the base plate, which must be mounted on a suitable heat sink, and by thermal convection from the radiator.

When operated in other mounting positions and/or higher ambient temperatures, forced air cooling may be required. The solenoid must be so mounted and cooled that no external part of the valve capsule is at a temperature in excess of 130°C.

E. The performance of four tubes has been examined while operating and while subjected to the following tests:-

(i) Resonance Search, amplitude 0.004" frequency sweep 0-30 c/s for 2 minutes, test performed three times.

(ii) Vibration

Amplitude Inches	Frequency c/s	Time Mins.
0.030	0-11	2
0.020	11-16	1
0.010	16-21	1
0.004	21-30	2

Test performed three times

(iii) Fatigue

Vibrated for 25 minutes with an amplitude of 0.010" at a frequency of 20 c/s.

Test performed six times.

Results

There was no measurable effect on gain, noise output and r.f. power output.

F. The surge current shall not exceed 8 Amps.

G. Conditions as in test clause f on page 3.

H. A data sheet giving operating conditions is supplied with each valve.

J. The solenoid mount assembly is not supplied with the valve. An outline drawing showing the valve in the solenoid mount assembly is shown on Page 7.

K. The N.A.T.O. Stock number is 5960-99-037-4305.

CV6157

TESTS

To be performed in addition to those applicable in K1001

Tests are to be performed in the specified order unless otherwise agreed with the Inspecting Authority.

Test Conditions - Unless Otherwise Specified

Vh (V) 3.5 | V Col (kV) Vhel+150V

Clause	Test	Test Conditions	AQL %	Insp. Level	Symbol	Limits Min.	Limits Max.	Units
a	Heater Current	No voltages except Vh		100%	Ih	3.5	4.5	A
b	Grid 1 Voltage	Vhel = 2.3 kV increase Vg1 from zero until I Col = 15 mA Note 2		100%	Vg1	0.5	1.0	kV
c	Grid 1 Current	Conditions as in test b. Note 2		100%	Ig1	-	1.0	mA
d	Helix Current	Conditions as in test b. Note 2		100%	Ihel	-	1.0	mA
e	Helix Voltage	Increase Vg1 from zero until I Col = 15 mA Apply a signal of r.f. power 5 ± 0.5 mW frequency 3.3 GHz ± 50 MHz to the input. Adjust Vhel to give Max r.f. power output. Note 2		100%	Vhel	2.0	2.3	kV
f	R.F. Power	Increase Vg1 from zero until I col = 15 mA Vhel = value obtained in Test Clause (e)						
	(i) Output 1	Apply a signal of r.f. power 5 ± 0.5 mW to the input at frequencies		100%				
		2.5 GHz ± 20 MHz				0.5		W
		3.3 GHz ± 20 MHz				0.5		W
		4.1 GHz ± 20 MHz Note 2				0.5		W
	(ii) Input	Increase the r.f. power input until the output falls beyond saturation to 500 mW Note 2		100%		65.0		mW

Clause	Test	Test Conditions	AQL %	Insp. Level	Sym-bol	Limit Min.	Limit Max.	Units
	R.F. Power (Contd.)							
f	(iii) Output 2	As in f (i) Increase the r.f. power input to 70 mW Note 2		100%		0.4	2.8	W
	(iv) Output 3	As f (i) at frequency intervals of 100 MHz ± 20 MHz over the band 2500 to 4100 MHz		Q.A.		0.5		W
g	High Level Noise Factor	Conditions as in test f (i) frequency of r.f. signal = 3.3 GHz ± 20 MHz. Notes 2 and 3		100%		-	30	dB
h	Cold v.s.w.r.	No voltages Measured over the frequency range 2.5 to 4.1 GHz		100%		-		
		(a) Input				-	3:1	Ratio
		(b) Output				-	3:1	Ratio
j	Hot v.s.w.r.	D.C. conditions as in f(i). Measured over the frequency range 2.5 to 4.1 GHz		100%				
		(a) Input					6.5:1	Ratio
		(b) Output Note 2					6.5:1	Ratio
k	Life	Note 4		Note 4		Note 4		

NOTES

1. The surge current shall not exceed 8 Amps.

2. Measured with the valve operating in a solenoid mount assembly which has been approved by comparison with the reference standard held by the Qualification Approval Authority. During adjustment and test the helix current must not exceed 1.5 mA.

3. The noise factor is measured by comparing the noise with that from a standard noise source, the detector being a broad-band crystal and receiver having a pass-band 5-50 MHz.

NOTES Cont'd.

4. (a) The sample size shall be as follows:-

Lot Size	Sample Size
1-25	1
26-50	2
51-100	3
100 or greater	2%

The manufacturer may test additional samples at his discretion.

(b) For the first lot of any production order, deliveries shall be held until satisfactory completion of a minimum of 500 hours life.

Where previous life test data is available deliveries may be released at the discretion of the Inspection Authority.

Thereafter, where previous results have proved satisfactory, shipment of valves may be permitted without awaiting the results of current tests.

(c) The criterion of acceptance shall be that the average life of the sample shall be at least 1,000 hours.

(d) In the event of a failure, the Qualification Approval Authority shall be informed.

(e) The end of life is reached when, after adjustment of the voltages within the specified limits, the valve fails to meet the Specification except that the levels of r.f. power output, noise and gain may deteriorate by 3 dB.

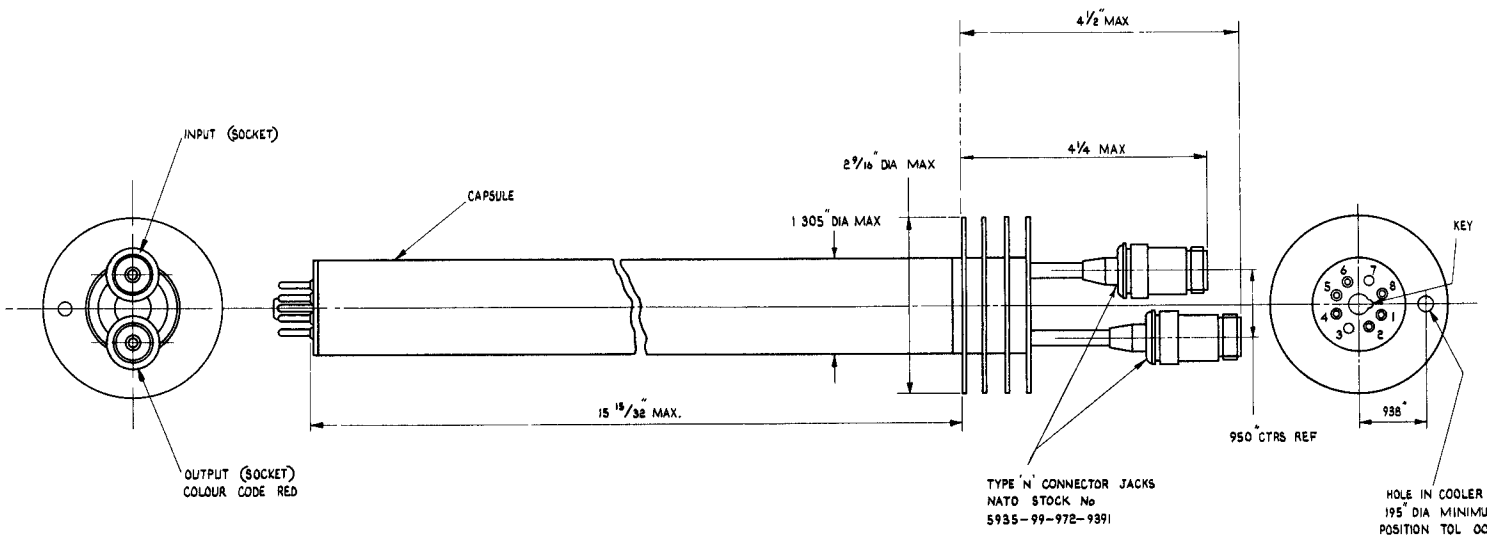

TOLERANCE
DECIMAL ± 005
FRACTION ± 1/64

DIMENSIONAL DRAWING OF VALVE

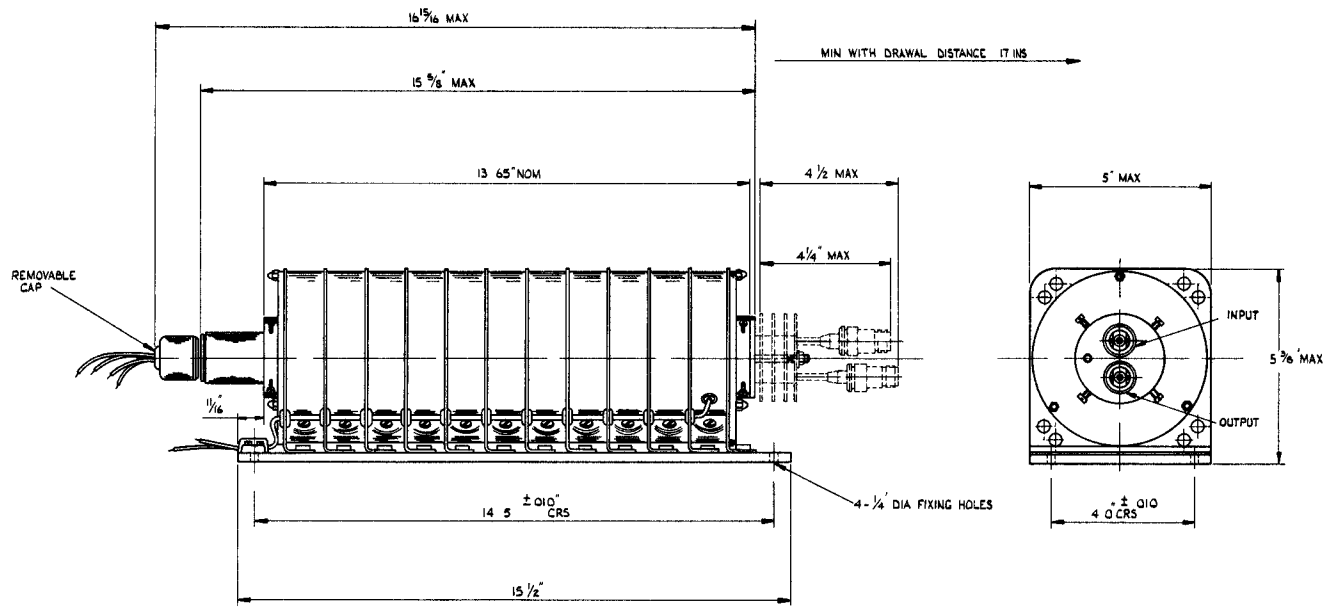

OUTLINE DRAWING OF VALVE IN SOLENOID MOUNT ASSEMBLY

(FOR THE INFORMATION OF EQUIPMENT (DESIGNERS)

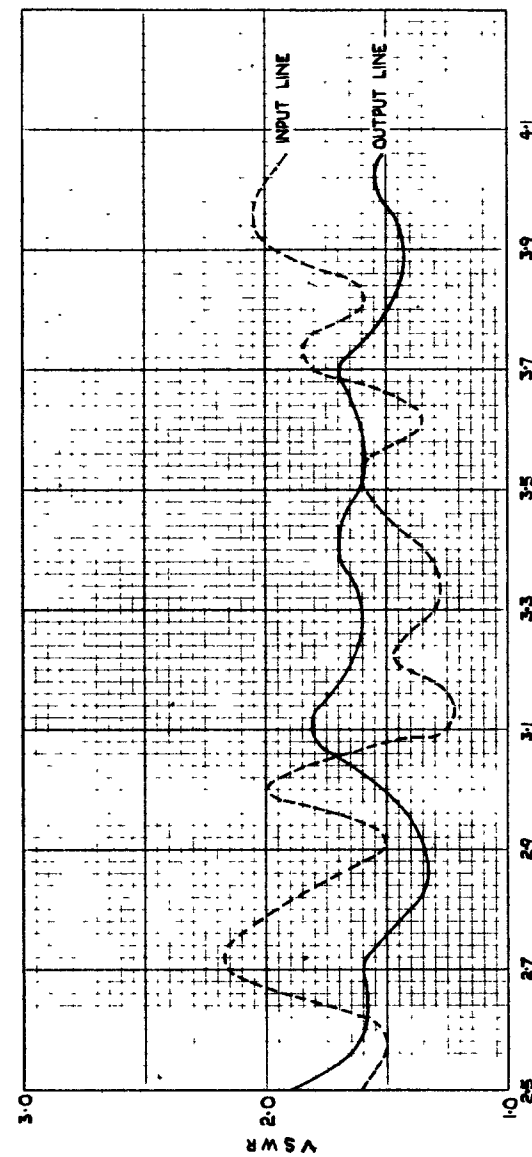

VARIATION OF MATCH WITH FREQUENCY
(MEASURED COLD)

DATA SHEET CV6157

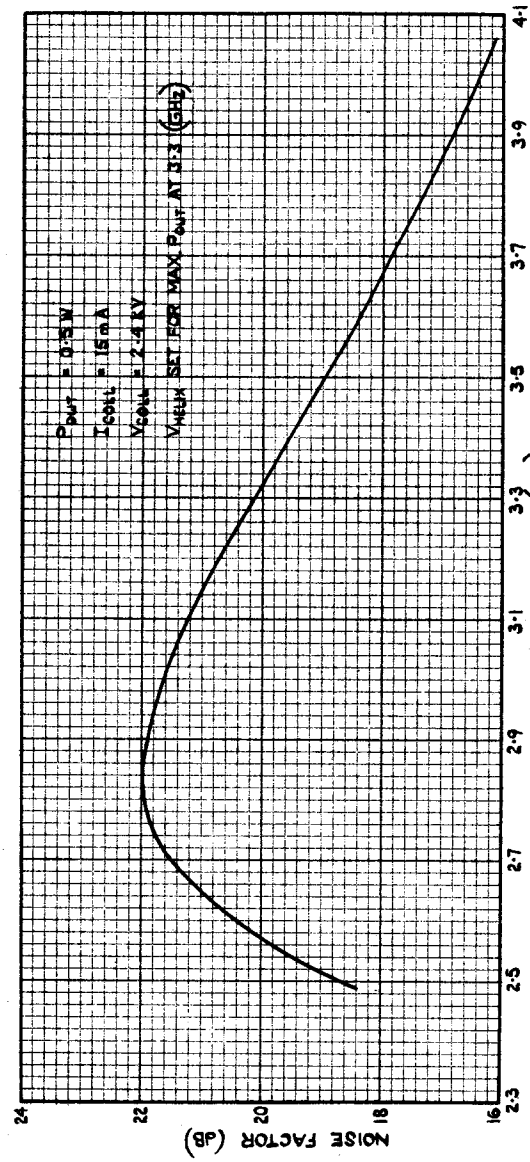

VARIATION OF NOISE FACTOR WITH FREQUENCY

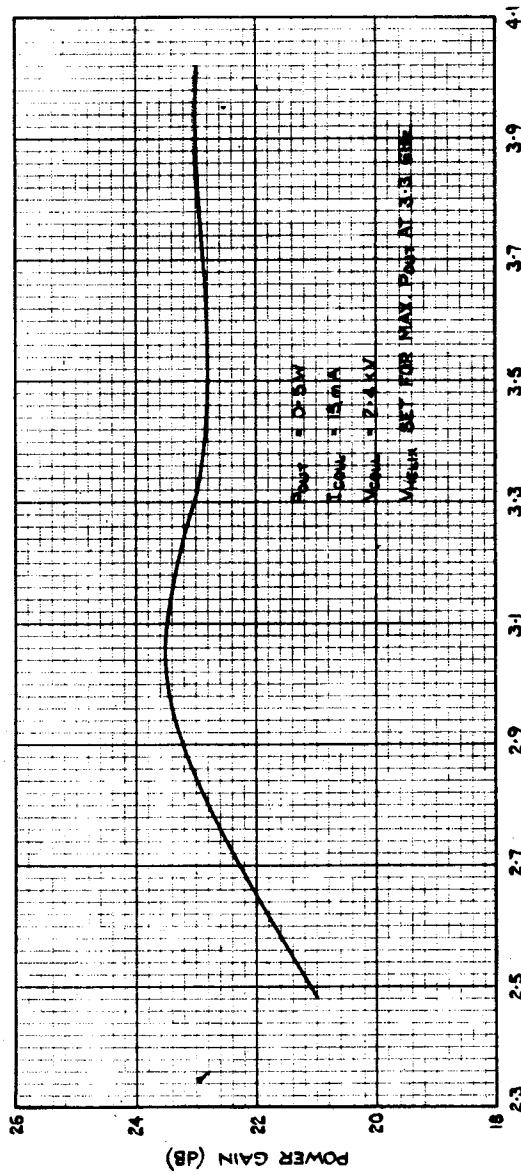

VARIATION OF POWER GAIN WITH FREQUENCY

DATA SHEET CV 6157

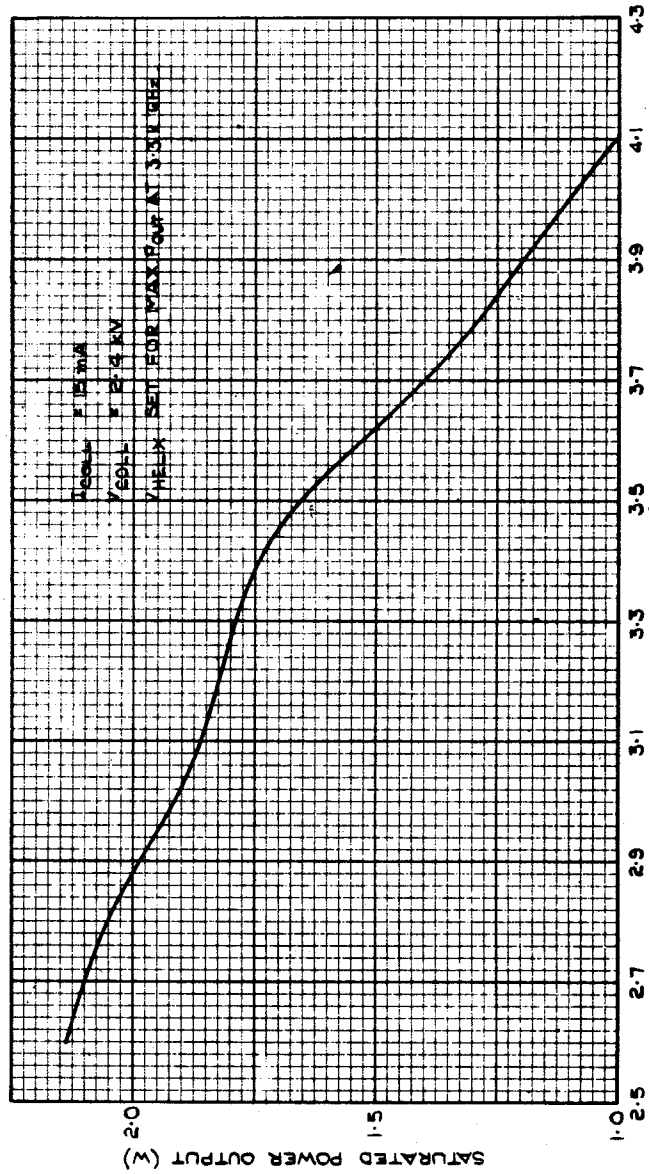

VARIATION OF SATURATED POWER WITH FREQUENCY

MINISTRY OF AVIATION - DLRD/RRE

VALVE ELECTRONIC **CV 6164**

Specification MOA/CV6164

Issue 1 Dated 22nd September 1965

To be read in conjuction with K1001, and BS1409

SECURITY	
Specification	Valve
Unclassified	Unclassified

⟶ Indicates a change

TYPE OF VALVE - Cathode Ray Tube
SCREEN AREA - 3" x 1" nom
DEFLECTION - Major Axis Magnetic, Minor Axis-Electrostatic
FOCUS - Electrostatic
BULB - Glass, internal conductive coating (Note A.
SCREEN - GG4
PROTOTYPE - VX5104

MARKING

See K1001/4

BASE

Potted with flying leads

RATINGS AND CHARACTERISTICS

(Absolute, non-simultaneous and not for Inspectorate)

			NOTES
Heater Voltage	(V)	6.3	
Heater Current	(A)	0.095	
Max. Anode1 & 3 Voltage	(kV)	5.0	B
Min. Anode1 & 3 Voltage	(kV)	1.0	B
Max. Anode 2 Voltage	(V)	300	
Min. Anode 2 Voltage	(V)	0	
Max. Heater - Cathode Voltage	(V)	125	
Max. Operating temperature	(°C)	75	

Typical Operating Conditions

Anode 1 & 3 Voltage	(kV)	3.0
Anode 2 Voltage for Focus	(V)	75
Max. Grid Voltage for Cut-off	(V)	60

CONNECTIONS

Lead Colour	Electrode
Yellow	Cathode - k
Pink	Deflection Plate - y1
Black	Deflection Plate - y2
Red	Anode1&3 - a3
Green	Grid - g
Brown	Heaters - h
Grey	Anode 2 - a2

DIMENSIONS

See drawing on Page 6

NOTES

A. The internal conductive coating permits the tube to be operated with the cathode at earth potential without the danger of spot movement due to face charging.

B. Anode 1 and Anode 3 are internally connected and will be referred to throughout the specification as Anode 3 (a3).

C. NATO Stock Number: 5960-99-037-4384

TESTS

To be performed in addition to those tests applicable in K1001

Test conditions, unless otherwise stated:

Vh (V)	Va3 (kV)	Va2 (V)
6.3	3.0	Optimum focus

K1001 Ref.	Test	Test Conditions	Insp. Level	Symbol	Limits Min.	Limits Max.	Unit
5A.3.1	(a) General Inspection-Dimensions	No Voltages See Drawing Page 6.	100%				
5A.3.2.1	(b) Loose Particles See Note 5	No Voltages	100%				
	(c) Heater Current	No Voltages except Vh	100%	Ih	0.08	0.12	A
5A.4.1.2	(d) Grid Insulation Leakage Current	Vh = 6.8V Rg = 10M ohm Vg = -100V	100%	Ig	-	10	µA
5A.4.1.3	(e) Heater-Cathode Leakage Current	Vh = 6.3V V_{hk} = ±125V	100%	Ih-k	—	25	µA
5A.4.3	(f) Negative Grid Cut-off Voltage	No deflection fields	100%	-Vg	30 Record	60	V
5A.5.1.1 and 5A.5.2	(g) Grid Drive (i) Minimum negative Vg (ii) Change of value of Vg from that in (f) above.	Adjust raster to cover useful screen area. Adjust Vg to give a light intensity of 0.35 candela.	100%		1 -	- 40	V V
5A.5.7	(h) (i) Line width measured at centre of trace. (ii) Focus Anode - Voltage & Current	Using magnetic deflection, scan along the major (or X) axis with a time base of 50 c/sec nominal, line length 65 mm. Adjust Vg to give I_a3= 50 µA. Adjust Va2 for optimum focus. Without re-focusing, repeat on minor (Y) axis using electrostatic deflection with a time base of 10 Kc/s nominal, line length 24 mm. Adjust Vg to give Ia3=15µA.	100%	Va2 Ia2	— 0 —	0.75 150 15	mm V µA

K1001 Ref.5A	Test	Test Conditions	Insp. Level	Sym bol	Limits		Units
					Min.	Max.	
5A.6.4.1 and 5A.6.4.2	(j) Spot Displacement, Deviation of undeflected focused spot from geometrical centre of screen.	No deflection fields. Adjust Vg to give Ia3 = 5μA. (may be pulsed if necessary - pulse width approx. 100 μsecs, p.r.f. 50c/sec)	100%		—	3	mm
5A.6.5	(k) Spot Displacement - Leakage	Conditions as in (j) Insert 1 Mohm between each Y plate and a3.	100%		—	2	mm
	(l) Spot shift due to External Charging	Apply 50c/sec time base to X axis to give a line length of approx. 65mm. Adjust Vg to give Ia3 = 1μA. Apply Va3 and earth potential alternately via an electrode to the centre of tube face parallel to the time base. Note 1.	100%		—	0.25	mm
5A.6.1	(m) Deflection Sensitivity- 'Y' axis	Y1 and Y2 are alternately connected to a3. Positive deflecting voltage being applied to the remaining Y plate.	100%		1.6	2.0	V/mm
5A.6.2.2	(n) Orthogonality Angle between mean major axis of tube face and scanned line.	Apply 'Y' scan to deflect over useful screen area.	100%		87°	93°	
5A.6.3	(o) Useful Screen Area Rectangular area free from shadowing about the geometric centre	Focused raster to slightly overscan area. 'X' axis 'Y' axis	100%		 ±32.5 ± 10	 — —	 mm mm
5A.3.5	(p) Blemishes and Screen Defects Blemishes larger than 0.5 mm 0.25mm - 0.5 mm. See Note 2	Scan over useful area with defocused raster.	100%		 — —	 0 5	

K1001 Ref.	Test	Test Conditions	Insp Level	Sym bol	Limits Min.	Limits Max.	Units
	(q) Flashover and Stray Emission	Scan conditions as in test (o) - Symmetrical deflection. Pre-heat the cathode at Vh = 6.3V for at least 2 minutes before applying other voltages. Increase Va3 to 5 kV at the same time increasing Vg to near cut-off. See Note 3.	100%				
	(r) Cathode Quality measured as $K = \frac{Ia3}{Vg\ (cut\ off)^{\frac{3}{2}}}$	Ia3 = 3kV Va2 = 0 Vg = 0 Negative grid cut off voltage as in test (f).	100%	Ia3 K	measure 2.7	 -	µA
5A.4.6	(s) Capacitances	Cg - all Ck - all Cy - all excluding other y plate Measured with lead under test separated from remainder.	5%			15 10 10	pf pf pf
5A.3.7	(t) Holding period - repeat tests (f) and (r)		100%		7	-	days
5A.8	(u) Life - See note 4 for inspection levels. Life end point	Focused raster Ia3 = 40µA Repeat Test (f) Record Vg Apply Grid drive as follows:- If Cut-off voltage exceeds 41 volts apply 40V grid drive. If Cut-off is less than 41 Volts apply drive until Vg equals -1V Measure Ib		 Ib	500 70	- -	hrs µA
5A.7.2	(v) Resistance to External Pressure		QA				

TESTS Cont'd

K1001 Ref.	Test	Test Conditions	Insp Level	Sym bol	Limits		Units
					Min.	Max.	
5A.8	(w) Life test - period life test end point	Focused raster Ia3 = 40µA Repeat Test (f). Record V_g Apply Grid drive as follows: If cut-off voltage exceeds 41 Volts apply 40 Volt grid drive. If Cut-off is less than 41 Volts apply drive until Vg = -1V. Measure Ib	QA	Ib	1000 50	– –	hrs µA
	(x) Vibration	No deflection fields. Focused spot. Freq. range 20 - 200c/s. Rate of change of freq. 0.2 octaves per minute. Amplitude 4in/sec. or 3.3g, whichever is the lower. Spot enlargement at any point not to exceed 1.5 diameters.	QA				

NOTES

1. A suitable electrode is a metal strip approximate dimensions 1 mm x 60 mm.
2. Blemishes below 0.25 mm shall be ignored, except where the separation between them is less than the maximum dimension of the largest blemish in the group, when they will be considered as a blemish having the mean dimensions of the closely spaced blemishes.
3. The tube shall be held with the screen horizontal and uppermost. It shall be viewed for 15 seconds in a dark box whilst the tube neck is being tapped with an approved forked rubber covered wooden mallet at a minimum rate of 4 taps per second. There shall be no evidence of flashover or stray emission after the first five seconds.
4. The scale of life testing shall be related to the production. For production orders of less than 51, at least one valve shall be life-tested. For production orders of greater than 50, the production shall be divided into batches of 50 and at least one valve from each shall be life-tested. The batch corresponding to the valve undergoing the life test shall not be released until the life test has completed 80% of the required life. At the option of the manufacturer and at his expense any number of additional valves may be life-tested, in which case the average of the lives of these valves shall exceed 80% of the required life before the batch can be released.
   Life Test is considered satisfactory when an accumulated total of 500 hours per sample is reached.
5. Referring to Fig. 5A/1 particles may be present from Groups 1, 2, 3 and 4 and if present must not exceed size A.

OUTLINE DRAWING

(THIRD ANGLE PROJECTION)

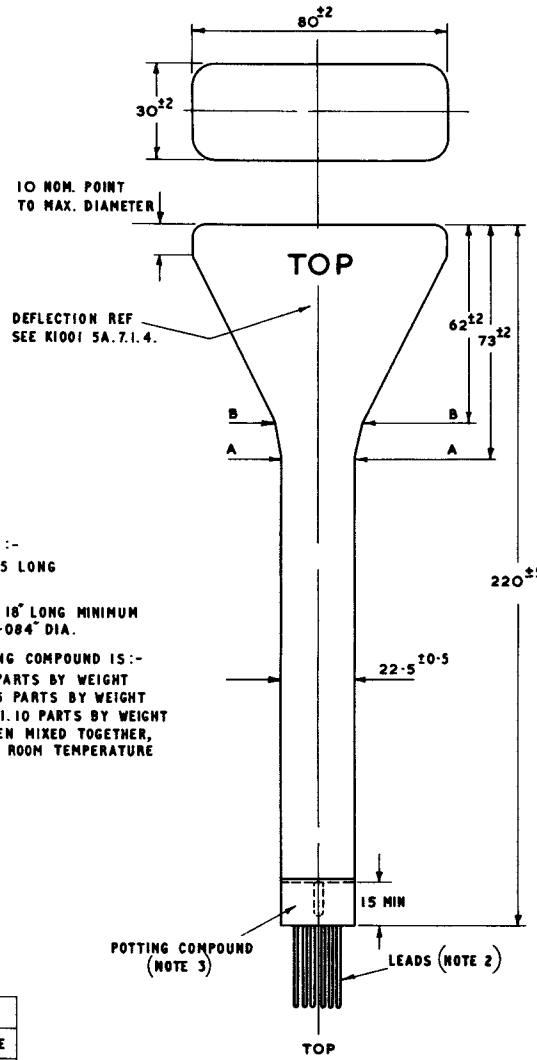

NOTES :-

1. STRAIGHTNESS GAUGE :-
   RING GAUGE "A" 23 x 45 LONG
   RING GAUGE "B" 27
2. FLYING LEADS TO BE 18" LONG MINIMUM TO DEF. 12C TYPE 4.0-084" DIA.
3. AN APPROVED POTTING COMPOUND IS :-
   CIBA TYPE Hy 753. 5 PARTS BY WEIGHT
   SHELL EPICOTE 871 95 PARTS BY WEIGHT
   CIBA HARDENER Hy 951. 10 PARTS BY WEIGHT
   THESE MATERIALS, WHEN MIXED TOGETHER, ARE LEFT TO SET AT ROOM TEMPERATURE FOR 48 HOURS.

COLOUR	LEAD
YELLOW	CATHODE
PINK	y1
BLACK	y2
RED	a1/a3
GREEN	GRID
BROWN	HEATER
BROWN	HEATER
GREY	a2 FOCUS

ALL DIMENSIONS IN MILLIMETRES

MINISTRY OF AVIATION -DLRD/RRE

VALVE ELECTRONIC

CV6167

Specification MOA/CV 6167 Issue 1. Dated 1st November 1965 To be read in conjunction with K1001, BS448 and BS 1409	SECURITY Specification: Unclassified Valve: Unclassified

Indicates change

TYPE OF VALVE - Cathode Ray Tube
DEFLECTION - Magnetic
FOCUS - Magnetic
GUN - Tetrode
BULB - Glass, Internal Conducting Coating
SCREEN - 009 (Aluminium backed)
PROTOTYPE - CV6113, T963Z, 12/48H2MA.

MARKING

See K1001/4

BASE

See BS448, B12A with short metal shell or approved alternative

SIDE CONTACT

See BS448. CT8

RATINGS, CHARACTERISTICS, CAPACITANCES AND CONNECTIONS

For details see latest issue of CV 6113

(A.L.1)

NATO STOCK NO.

99-037-4407

TESTS

The tests required by specification CV 6113 shall be performed except as follows:-

K1001 Ref	TEST	TEST CONDITIONS	AQL %	Insp. Level	Sym-bol	Limits Min.	Limits Max.	Units
5A.5.7	Focus Astigmatism of undeflected focused spot.	As for CV6113 but associated Note 5 amended to read as follows:-		100%		-	20	%

Note 5:- Measure maximum and minimum axis at tube centre.

$$\text{Limits} = \frac{\text{Difference}}{\text{Max}} \times 100$$

K1001 Ref.	TESTS	TEST CONDITIONS	AQL %	Insp. Level	Sym-bol	Limits		Units
						Min.	Max.	
5A.7.2.2	Line Width	Pulsed line 250 mm Pulsed width = 100 µS Focus as in Astigmatism test. Modulation pulses and deflection waveform Note 9	-	100%	-	-	0.25	m.m.
5A.5.1.1 and 5A.5.1.2	Screen Efficiency	V_{a2} = 9 kV Vg adjusted to give a light intensity of 0.12 candela using a focused raster of convenient size viewed through Wratten No. 22 filter.		100%	I_b	-	12	µA
5A.17	Persistance measured as a decay time to 0.014 foot-lamberts	No focus field, Vg adjusted to give screen luminance of 2 foot-lamberts viewed through Wratten No. 22 filter or equivalent. Linear raster of convenient size, uniform screen excitation. Excitation time = 120 secs approx.	2.5	I		208	-	secs

NOTE:- To allow for screen temperature coefficient the minimum decay time limit at any temperature between 15°C and 30°C which is "n" °C above 15°C is:-

$$208\ (1-0.04)^n \text{ seconds}$$

MINISTRY OF AVIATION DLRD(T) R.R.E. VALVE ELECTRONIC **CV6168**

Specification: MOA/CV6168 Issue 1 dated 19th August 1965 To be read in conjunction with K1001, DEF131, DEF5011, etc.	SECURITY Specification: Unclassified Valve: Unclassified

Type of Valve: Reliable Broad-Band TR Cell

Prototype: WF 461

MARKING

K1001/4

RATINGS AND CHARACTERISTICS
(Not for Inspection purposes)

			Note
Operating Frequency Range	Mc/s	8500-9500	
Max. Peak Power	kW	200	
Min. Peak Power	kW	4	
Min. Primer Supply Voltage	V	-850	B
Primer Current	µA	130	B

Base: None

DIMENSIONS

See outline drawing

TOP CAP

None

Primer connection is by wrapped joint, single strand wire 20-25 swg.

NOTES

A. The cell is for use in balanced duplexers, mounted between 3 dB couplers, 0.75 centres (W.G.16).

B. The primer encapsulation contains 5.5 Mohms of external resistance. With a primer supply voltage of between -850 and -1000V, the primer current will be limited to between 100 and 160 µA. With a primer supply voltage of not less than -950V, the supply to the primer must be connected at least 5 seconds before the application of high power RF pulses. With a primer supply of between -850 and -950V, the supply must be connected at least 30 seconds before the application of high power RF pulses.

C. Arc loss becomes disproportionately high at line powers of less than 4 kW.

D. There is a 3.3 Megohm resister between the primer connection and the monitor allowing a measurement to be made of the primer current without disconnecting the primer supply.

E. NATO Stock Number: 5960-99-037-4455

To be performed in addition to those tests applicable in K1001

Conditions: Unless otherwise stated, Primer supply voltage is -1000V and the cell is mounted between 3 dB couplers, 0.75" centres, to an approved design.

K1001 5H,	Test	Test Conditions	AQL %	Insp. Level	Sym-bol	Limits Min.	Limits Max.	Units
	GROUP A							
2.5	Primer Breakdown	Applied voltage -950V Note 1		100%	t	-	5	secs
2.5	Primer Current	Applied voltage -850V Note 1		100%		100	-	µA
4.1.3.1	V.S.W.R.	Reflectometer Check 8500 to 9500 Mc/s Note 2		100%		-	1.30	Ratio
4.1.1.1	Total Insertion Loss	Reflectometer Check at 8500 Mc/s 8600 to 9500 Mc/s Note 3		100%		- -	1.0 0.8	dB dB
	Leakage	f = 8900 ± 100 Mc/s P.R.F. = 1,000 pps ± 10% Linepower = 200 kW ± 15%						
	(1) Spike	tp = 0.15 µS ± 15%		100%		-	0.02	e/p
	(2) Total	tp = 1.0 µS ± 15% Note 4		100%		-	10	mW
	GROUP B - Omitted							
	GROUP C							
4.2.4.4	Low level leakage	f = 8900 Mc/s ± 100 Mc/s P.R.F. = 1000 pps ± 10% tp = 1.0 µS ± 10% Incident power varied from 100 mW peak to 100 W peak	2.5	II		-	500	mW
4.2.5.1	Recovery Time							
	(1)	at 200 kW peak Note 5	2.5	II		-	1.5	µS
	(2)	at 70 kW peak Note 6				-	0.8	µS

TESTS (Cont'd)

CV 6168

K1001	Test	Test Conditions	AQL %	Insp. Level	Sym-bol	Limits Min.	Limits Max.	Units
Group C (Cont'd)								
4.1.10	Electrical Length		10	II				
	(1)	at 8500 Mc/s				147	187	deg.
	(2)	at 8900 Mc/s				234	274	deg.
	(3)	at 9500 Mc/s				350	390	deg.
		Note 7						
	GROUP D							
4.2.2	Arc Loss	4 kW min. power		QA		-	1.2	dB
		Note 8						
4.2.7	Position of			QA				
	Short Circuit	Note 9				.058	.072	inches
	GROUP E							
	Damp Heat	DEF 5011 Section 5		QA				
		Category H.5						
	Shock	DEF 5011 Section 13		QA				
		Category S.2						
	Dry Cold	DEF 5011 Section 15		QA				
		Category -25°C						
	Dry Heat	DEF 5011 Section 16		QA				
		Category +85°C						
	Vibration	DEF 5011 Section 18		QA				
		Category V.2						
	GROUP F							
	Life							
	Life Test End Point			4.0%		Record		
5.3	(1) 500 Hours	at 200 kW peak						
		Note 10						
	Post 500 Hours Life Tests							
	Inoperatives		2.5					
	Electrical Tests	Combined AQL	6.5					
	(1) Recovery Time	To -6db				-	3.0	uS
	(2) v.s.w.r.	8500 to 9500 Mc/s				-	1.4	Ratio
	(3) Insertion Loss	8500 to 9500 Mc/s				-	1.2	dB
	(4) Crystal Protection	Crystal N.F. deterioration				Record		dB

CV6168/1/3

CV 6168

K1001	Test	Test Conditions	AQL %	Insp. Level	Sym bol	Limits Min	Limits Max	Units
	Life Test End Point							
5.3	(2) 1000 Hours	At 70 kW peak Note 11						
	Post 1000 Hours Life Tests							
	Inoperatives		2.5					
	Electrical Tests	Combined AQL	6.5					
	Recovery Time	To -6dB						
	V.S.W.R.	8500 Mc/s to 9500 Mc/s				-	1.4	Ratio
	Insertion Loss	At 8500 Mc/s				-	1.20	dB
		At 8600 to 9500 Mc/s				-	1.00	dB

NOTES

(1) D.C. Primer Supply as specified in K1001 5H.2.5. Cell un-mounted.

(2) V.S.W.R. measurements shall be made with the line energised at not greater than 10 mW. The termination shall be matched better than 1.02 over the frequency band.

(3) Measurement of insertion loss shall be made with the valve mounted between impedances matched better than 1.10 V.S.W.R. over the frequency band and the line energised at not greater than 10 mW.

(4) For high power measurements, the magnetron shall be a CV2284 or equivalent. The rate of rise of magnetron voltage shall be 100 kV/µsec. ± 10%. Pulse lengths shall be measured at 10% of peak amplitude. A thermistor with the following characteristics shall be used:-

$$\text{Efficiency (E)} = \frac{\text{Measured Power}}{\text{Incident Power}} \text{ shall be greater than } 0.9$$

V.S.W.R. better than 1.10 over 8900 Mc/s ± 100 Mc/s
" " 1.33 over 8900 Mc/s ± 250 Mc/s

If the measured leakage powers are P_1 and P_2 microwatts at pulse lengths of 0.15 µsec. and 1.0 µsec. respectively then:-

4.1. Spike energy = $\frac{10P_1}{E \times p.r.f.}$ ergs/pulse

4.2 Total leakage = $\frac{1000P_2}{E \times p.r.f.}$ mW peak

(5) Test conditions are:- Peak power 200 kW ± 10% PRF 1000 p.p.s. ± 10% tp = 1.0 μsec ± 10%.

The frequency of the simulated echo pulse shall be within the range 8500 to 9500 Mc/s and shall be not greater than 10 mW peak incident on the cell. The time shall be measured from the trailing edge of the transmitter pulse for an insertion loss exceeding that immediately before the transmitter pulse by 6 db.

(6) Test conditions are:- Peak power 70 kW ± 10% PRF = 3000 p.p.s. ± 10% tp = 0.33 μsec ± 10%

Otherwise as Note (5).

(7) The length of RCSC No.16 waveguide having the same effective electrical length as the cell shall be determined, with the line energised at a convenient low power level. The measurement shall be made on each half of the cell.

(8) Arc loss shall be measured with the line energised at not greater than 4 kW RF peak measured immediately after the cell. PRF = 1000 p.p.s. ± 10% tp = 1.0 μsec ± 10%.

(9) The position of short circuit shall be measured as the distance of the effective RF short behind the input flange of the cell. Peak power = 200 kW ± 10% tp = 1.0 μsec. ± 10% PRF = 1000 p.p.s. ± 10%. The measurement shall be made on each half of the cell.

(10) Life tests shall be carried out with the cells mounted between 3 dB couplers. Crystals type CV2154 shall be mounted in approved holders behind each cell. The main run shall be terminated in a matched load. Input power to each cell shall be 200 kW ± 10% PRF = 1000 p.p.s. ± 10% tp = 1.0 μsec. ± 10% f = 9375 ± 100 Mc/s.

(11) Conditions as in Note (10) except that Peak power = 70 kW ± 10% PRF = 3000 p.p.s. ± 10% tp = 0.33 μsec. ± 10%.

OUTLINE DRAWING
(THIRD ANGLE PROJECTION)

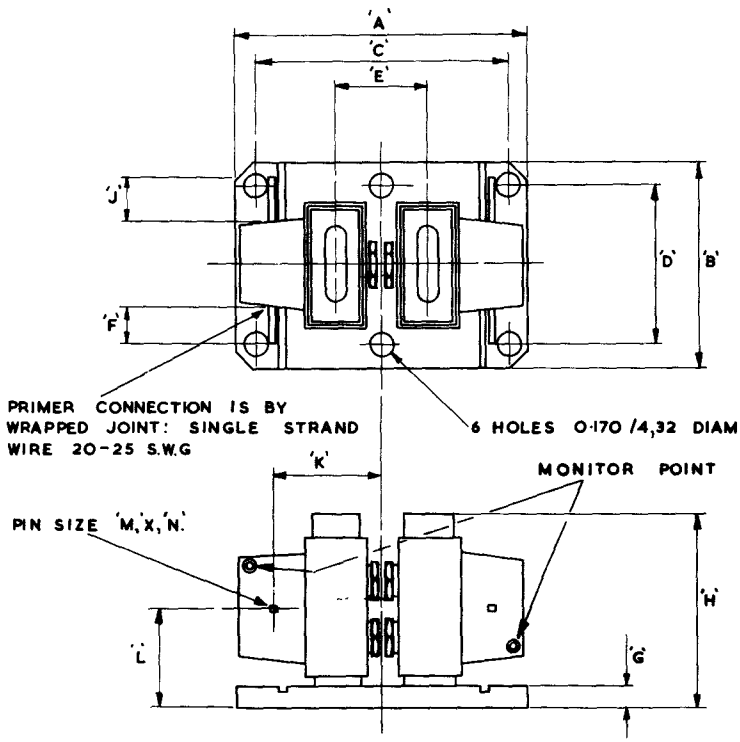

	DIMENSIONS INCHES		DIMENSIONS MILLIMETRES	
	MAX	MIN	MAX	MIN
A.	2·355	2·345	59,82	59,56
B.	1·630	1·620	41,40	41,15
C.	2·030	2·022	51,56	51,36
D.	1·223	1·217	31,06	30,91
E.	0·755	0·745	19,18	18,92
F.	0·250	NOM.	6,35	
G.	0·175	0·165	4,44	4,19
H.	1·557	1·553	39,55	39,45
J.	0·425	NOM.	10,80	
K.	0·875	NOM.	22,22	
L.	0·778	NOM.	19,76	
M	0·036	NOM.	0,91	
N.	0·048	NOM	1,21	

ALL DIMENSIONS IN INCHES

MINISTRY OF AVIATION DLRD (T) R.R.E.

VALVE ELECTRONIC **CV 6169**

Specification: MOA/CV6169 Issue 1 dated 13th August 1965 To be read in conjunction with K1001 BS448 etc.	SECURITY Specification: Unclassified Valve: Unclassified

Type of Valve: Reliable Broad-Band TR Cell Prototype: WF 471	MARKING K1001/4 Base: None

RATINGS AND CHARACTERISTICS
(Not for Inspection purposes)

			Note
Operating Frequency Range	Mc/s	8500 to 9500	
Max. Peak Power	kW	50	
Min. Peak Power	kW	4	
Min. Primer Supply Voltage	V	-850	B
Primer Current	µA	130	B

DIMENSIONS
See outline drawing

TOP CAP
None

Primer connection is by wrapped joint, single strand wire 20-25 swg

NOTES

A. The cell may be used in branched or balanced duplexers.

B. The primer encapsulation contains 5.5 Mohms of external resistance. With a primer supply voltage of between -850V and -1000V the primer current will be limited to between 100 µA and 160 µA. With a primer supply voltage of not less than -950V, the supply to the primer must be connected at least 5 seconds before the application of high power RF pulses. With a primer supply voltage of between -850V and -950V, the supply to the primer must be connected at least 30 seconds before the application of high power RF pulses.

C. Transmission loss becomes disproportionately high at line powers of less than 4 kW.

D. There is a 3.3 Megohm resistor between the primer connection and the monitor point allowing a measurement to be made of the primer current without disconnecting the primer supply.

E. NATO Stock Number: 5960-99-037-4456.

Conditions: Unless otherwise stated, Primer Supply Voltage is -1000V

K1001 5H	Test	Test Conditions	AQL %	Insp. Level	Sym-bol	LIMITS Min.	LIMITS Max.	Units
	GROUP A							
	Primer Breakdown	Applied Voltage -950V		100%	t	-	5	Secs
2.5	Primer Current	Applied Voltage -850V Note 1		100%		100	-	µA
4.1.3.1	V.S.W.R.	Reflectometer check 8500 and 9500 Mc/s 8600 - 9400 Mc/s Note 2		100%		 - -	 1.40 1.30	
4.1.1.1	Total Insertion Loss	Reflectometer check 8500 and 9500 Mc/s 8600-9400 Mc/s Note 3		100%		 - -	 1 0.8	 dB dB
	Leakage	f = 8900 Mc/s ± 100Mc/s P.R.F. = 1000 p.p.s. ± 10% Linepower = 50 kW ± 15% Note 4						
	(1) Spike	tp = 0.15 µsec ± 15%		100%		-	0.30	Ergs/ pulse
	(2) Total	tp = 1.0 µsec ± 10%		100%		-	100	mW
	GROUP B omitted							
	GROUP C							
4.2.4.4	Low Level Leakage	f = 8900 Mc/s ± 100 Mc/s P.R.F. = 1000 pps ± 10% tp = 1.0 µsec ± 10% Incident power varied from 100 mW peak to 100 W peak	2.5	II		-	250	mW (pK)
	Recovery Time	To -6 dB Note 5					0.5	µSec
4.1.10	Electrical Length	(1) 8500 Mc/s (2) 8900 Mc/s (3) 9500 Mc/s Note 6				147 234 350	187 274 390	deg. deg. deg.

TESTS (Cont'd)

CV 6169

K1001 5H	Test	Test Conditions	AQL %	Insp. level	Symbol	LIMITS Min.	LIMITS Max.	Units
	GROUP D							
4.2.2	Arc Loss	4 kW min. Power Note 7		QA		-	0.8	dB
4.2.7	Position of short circuit	Note 8		QA		0.058	0.072	inches
	GROUP E							
	Damp Heat	DEF 5011 Section 5 Category H.5		QA				
	Shock	DEF 5011 Section 13 Category S.2		QA				
	Dry Cold	DEF 5011 Section 15 Category -25°C		QA				
	Dry Heat	DEF 5011 Section 16 Category +85°C		QA				
	Vibration	DEF 5011 Section 18 Category V.2		QA				
	GROUP F							
	Life	Note 9						
5.3	Life Test End point 1000 Hrs			4.0%			Record	
	Inoperatives		2.5					
	Electrical Tests	Combined AQL	6.5					
	Recovery Time	to -6 dB Note 5					3	µsecs
	V.S.W.R.	Reflectometer check						
		8500, 9500 Mc/s					1.5	Ratio
		8600 to 9400 Mc/s					1.4	Ratio
		Note 2						
	Insertion Loss	Reflectometer check						
		8500, 9500 Mc/s					1.2	dB
		8600 to 9400 Mc/s					1.0	dB
	Crystal Protection	Xtal N.F. Deterioration in dB measured after 500 Hours.					Record	

NOTES

(1) D.C. Primer Supply as specified in K1001 5H.2.5. Cell unmounted.

(2) V.S.W.R. measurements shall be made with the line energised at not greater than 10 mW. The termination shall be matched better than 1.02 over the frequency band.

(3) Measurement of insertion loss shall be made with the valve mounted between impedances matched better than 1.10 V.S.W.R. over the frequency band and the line energised at not greater than 10 mW.

(4) For high power measurements, the magnetron shall be a CV2284 or equivalent. The rate of rise of magnetron voltage shall be 100 kV/μsec ± 10%. A thermistor with the following characteristics shall be used:-

$$\text{Efficiency (E)} = \frac{\text{Measured Power}}{\text{Incident Power}} \quad \text{shall be greater than 0.9}$$

V.S.W.R. better than 1.10 over 8900 Mc/s ± 100 Mc/s

" " 1.33 over 8900 Mc/s ± 250 Mc/s

If the measured leakage powers are P_1 and P_2 microwatts at pulse lengths of 0.15 μsec. and 1.0 μsec. respectively, then

4.1. Spike energy $= \frac{10P_1}{E \times p.r.f.}$ ergs/pulse

4.2. Total leakage $= \frac{1000P_2}{E \times p.r.f.}$ mW peak

(5) Recovery time shall be measured with the cell in a side-arm T-junction operated under the following conditions:-

Peak power = 10 kW Pulse length = 1.0 μsec. ± 10%

PRF = 1000 pps ± 10%

The frequency of the simulated echo pulse shall be within the range 8500 to 9500 Mc/s and shall be not greater than 10 mW peak incident on the cell. The time shall be measured from the trailing edge of the transmitter pulse for an insertion loss exceeding that immediately before the transmitter pulse by 6 dB.

(6) The length of RCSC No. 16 waveguide having the same effective electrical length as the cell shall be determined, with the line energised at a convenient low power level.

(7) Arc Loss shall be measured with the line energised at not greater than 4 kW RF peak measured immediately after the cell.

PRF = 1000 pps ± 10% tp = 1.0 μsec. ± 10%

(8) The position of short circuit shall be measured as the distance of the effective RF short behind the input flange of the cell.

Peak power = 50 kW tp = 1.0 μsec ± 10%

PRF = 1000 pps ± 10%

(9) Life tests shall be carried out with the cells mounted on E-plane T-junctions. Crystals type CV2154 shall be mounted in approved holders at the optimum distance behind each cell. The main run shall be terminated in a matched load. Input power to each cell shall be 50 ± 10 kW.

PRF = 1000 pps ± 10% tp = 1.0 μsec ± 10%

f = 9375 Mc/s ± 100 Mc/s.

CV 6169

OUTLINE DRAWING

(THIRD ANGLE PROJECTION)

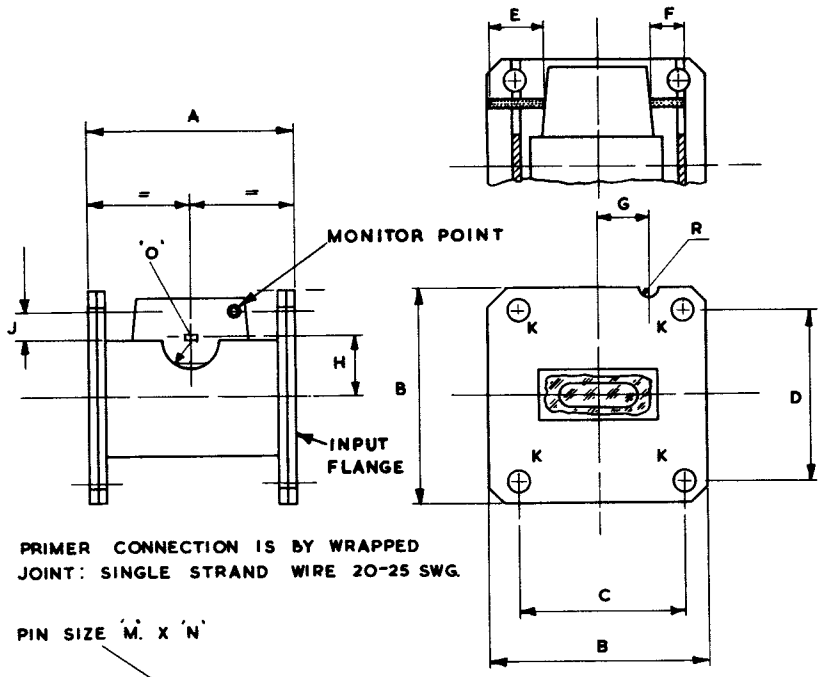

PRIMER CONNECTION IS BY WRAPPED JOINT: SINGLE STRAND WIRE 20-25 SWG.

PIN SIZE 'M' X 'N'

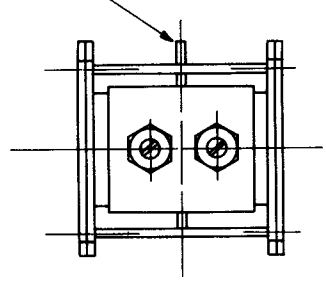

	INCHES		M.M.	
	MAX.	MIN.	MAX.	MIN.
A.	1·557	1·553	39,54	39,44
B.	1·640	1·610	41, 65	40,89
C.	1·223	1·217	31,06	30, 91
D.	1·283	1·277	32,59	32, 44
E.	0·425	NOM.	10, 8	NOM.
F.	0·250	NOM.	6,35	NOM.
G.	0·245	0·225	6,23	5, 72
H.	0·500	NOM.	12, 7	NOM.
J.	0·215	NOM.	5, 46	NOM.
K	0·172	0·168	4, 37	4, 27
M	0·086	NOM.	0, 91	NOM.
N	0·048	NOM.	1, 21	NOM.
R	0·063	NOM.	1, 60	NOM.
O	0·188	NOM.	4, 76	NOM.

HOLES ARE CO-AXIAL WITHIN POS$^{N.}$ TOL OF ·008" DIA. (0,2)

ALL DIMENSIONS ARE IN INCHES.

VALVE ELECTRONIC

CV6178 CV6192 CV6206

MINISTRY OF TECHNOLOGY - DLRD/RRE

Specification Mintech./CV6178; CV6192; CV6206 Issue 1A, Dated April 1968 To be read in conjunction with K1001 and BS1409.	SECURITY Specification: Unclassified Valve: Unclassified

← indicates a change

TYPE OF VALVE: Broad Band T.R. Solid State Limiter (See Note D). PROTOTYPES: CV6178 - BS808 (RVTS 0055) CV6192 - BS814 (RVTS 0061) CV6206 - BS818	MARKING See K1001/4 DIMENSIONS and CONNECTIONS See drawing on Page 5

RATINGS AND CHARACTERISTICS

(Absolute, non-simultaneous and not for Inspection purposes)

	Min.	Typical	Max.	Notes
Operating Frequency:-				
CV6178 (MHz)	8500		9100	
CV6192 (MHz)	9000		9700	
CV6206 (MHz)	9400		10000	
Peak Power (kW)	1	-	200	A, B
Primer Supply Voltage (V)	-	-1000	-	
Primer Current (μA)	-	-	150	C
Spike Energy (ergs/pulse)	-	-	0.02	

NOTES

A. The life expectancy of the tube exceeds 500 hours at r.f. power levels less than that quoted, and falls progressively as the power level is increased above the quoted value. Consequently it is recommended that to ensure long life and for satisfactory operation at power levels above 50kW, that the valve be preceded by a Pre-T.R. cell.

B. With duty ratio not exceeding 0.001.

C. Primer current to be limited by a series resistance of 5.5 MΩ ± 5%, of which at least 0.5 MΩ must be placed adjacent to the valve.

D. The varactor used as the limiter is specified in R.V.T.S. 0057.

E. N.A.T.O. Stock Numbers are:-

CV6178 - 5960-99-037-4603
CV6192 - 5960-99-037-4952
CV6206 - 5960-99-037-5439

TESTS

To be performed in addition to those tests applicable in K1001

TEST CONDITIONS: Unless otherwise specified primer supply voltage = -1000V. Primer supply resistance = 5.5MΩ of which at least 0.5MΩ shall be adjacent to the cell.

K1001 Ref. 5H		Test	Test Conditions	AQL %	Insp Level	Symbol	Limits Min.	Limits Max	Units
3.1.1	(a)	Primer Breakdown The delay between application of primer voltage and initial breakdown to be measured	Primer supply voltage to be -900V. Test to be performed at least 7 days after any previous discharge		100%	t_i	-	5	S
3.1.2	(b)	Primer Operating Current The primer current to be measured after breakdown has occurred.	As for test "a"		100%	I_d	75	150	μA
4.1.3.1	(c)	V.S.W.R. VSWR to be measured over frequency band:- CV6178 - 8500 to 9100 MHz. CV6192 - 9000 to 9700 MHz. CV6206 - 9400 to 10000 MHz.	Line to be energised with not more than 10 mW RF power and terminated in a load matched better than 1.02 VSWR		100%	-	-	1.3	-
4.1.1.1	(d)	Low Level Insertion Loss Measured at frequencies:- CV6178 - 8500 8800; 9100 MHz. CV6192 - 9000; 9350; 9700 MHz. CV6206 - 9400; 9700; 10000 MHz.	Line to energised with not more than 10 mW r.f. power. Valve mounted between impedance matched better than 1.1 v.s.w.r.		100%	α_p	-	0.8	dB
4.2.4	(e)	High Power Leakage Test (e) cont'd. on page 3.	Line to be energised using 50kW ± 10% peak r.f. power with PRF = 1000Hz ± 10%, terminated in a matched load. Test frequencies:- CV6178 - 8800MHz. CV6192 - 9350MHz. CV6206 - 9700MHz. Tolerance ± 100MHz.		100%		See Page 3		

TESTS (Cont'd)

K1001 Ref. 5H		Test	Test Conditions	AQL %	Insp. Level	Sym-bol	Limits Min	Limits Max	Units
4.2.4.2.2 (e cont'd)		1. Spike Energy	tp >40nS.			Was	-	0.02	ergs/ pulse
4.2.4.1		2. Total Leakage Power	tp = 1.0 μS ±10%			Pα	-	30	mW
4.2.5	(f)	Recovery Time The time to be measured from the trailing edge of the applied pulse until the insertion loss has fallen to a value 6 dB above its value immediately before the pulse is applied.	tp = 1 μs ± 10% Other conditions as in test 'e'		100%	tdα	-	2	μS
4.2.4.4	(g)	Low Power Leakage The peak total leakage through the valve is to be measured as the applied power is varied	Applied peak RF power varied from 100 mW to 100 Watts tp = 1μs ± 10% Other conditions as in test 'e'	6.5	I	RαL	-	50	mW
4.2.7	(h)	Position of Short The distance of the effective RF short circuit behind the front flange of the valve is to be measured	tp = 1 μs ± 10% Other conditions as in test 'e'	6.5	I	l	0.014	0.028	in
4.2.2	(j)	Arc Loss	Line to be energised with 4kW peak RF power measured immediately after the valve tp = 1 μs ± 10% Other conditions as in test 'e'		1%	(A) α arc	-	0.8	dB
5.2.3	(k)	Temp.Cycling Post Temperature Cycling Tests	The valve shall be stored at 70°C for one hour, followed by one hour at room temperature and one hour at -40°C. This cycle to be repeated six times. Tests and limits as contained in (a), (b) (d) and (e). Note 1.		1%				

K1001 Ref. 5H		Test	Test Conditions	AQL %	Insp. Level	Sym-bol	Limits Min	Limits Max	Units
5.3	(1)	Life Test	The valves to be mounted in series E-Plane T junctions followed by a matched load. The input power into the life test assembly shall be that which provides an RF power level of not less than 20kW into the matched termination. Other conditions as in test (e) 2. Note 1.		4.0%		500 See Note 2	-	hours

NOTES

1. The tests shall be performed on a sampling basis consisting of the specified percentage of the contract requirement (taken to the nearest whole number in excess of the percentage value) and spread evenly over the production period. The valves used shall be taken from those in current production at the time of the commencement of the test.

   Where the rate of production is less than 25 valves per month a batch size may be considered as being that obtained over a period of one month. The manufacturer may at his discretion test additional valves.

   During continuous production (which for the purpose of this specification shall be considered as being production which has not been interrupted for a period in excess of six calendar months) the criterion of acceptance shall be based on not more than one failure in any ten consecutive valves tested and shipment of valves may be permitted from the commencement of a contract provided that rejection of earlier production lots has not occurred.

   Following a six months non-production period shipment may be permitted after the first sample satisfies the specified tests. In the event of a failure before the criterion of acceptance can be applied, the manufacturer shall test at least two further devices made at the time of failure.

   If neither valve fails acceptance then shipment is permitted, but in the event of an additional failure the Approval Authority shall be informed.

2. End of life test point shall be 500 hours or when the valve is tested for the tests given in b,c,d, e and f and fail to meet the following relaxation of limits:-

   (c) V.S.W.R. Max 1.4
   (d) Insertion loss Max 1.0
   (e) Spike energy 0.02 ergs/pulse max
   (f) Recovery time 10 dB at 4 μs.

   The criterion for acceptance of the production at 500 hours shall be at least 90% where life expectancy:-

$$\geq \frac{\text{Total Hours (or cycles) of operation}}{\text{Number of samples x 500 hours (or 2500 cycles)}}$$

   The number of samples shall not be less than one per month and may be increased above 4% of production at the manufacturer's discretion.

CV6178 CV6192 CV6206

OUTLINE DRAWING

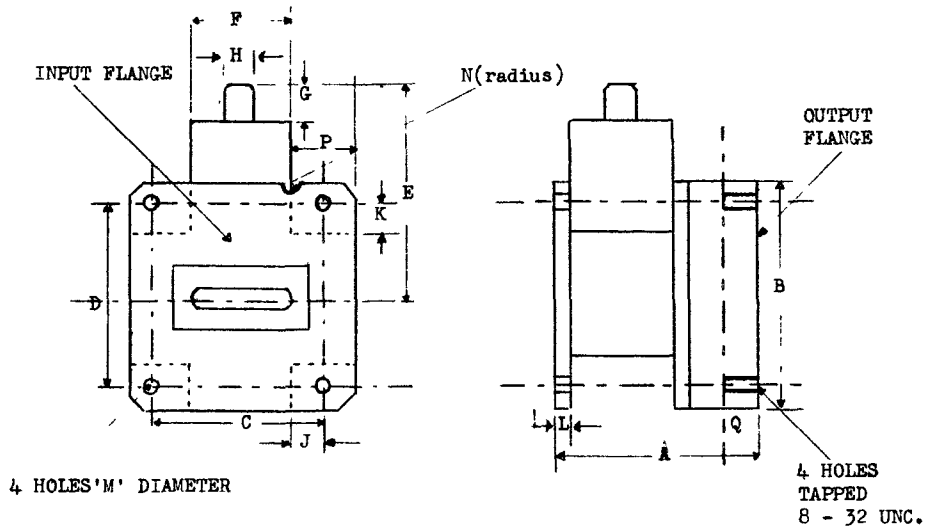

4 HOLES'M' DIAMETER

DIMENSIONS

	Inch	mm.
A	1.555 ±0.005	39.3
B	1.625 + 1/64	41.3
C	1.22 ±0.004	31.0
D	1.28 ±0.004	32.5
E	1.625 MAX	41.3
F	0.78 MAX	19.9
G	0.25 min.	6.35 min.
H	0.25 MIN	6.35
J	7/32 MIN	5.55
K	3/16 max.	4.77
L	0.093 min.	2.4
M	0.173 ±0.004	4.4 ± 0.1
N	1/16 ± 1/32	1.59
P	7/16	11.1
Q	0.25 min.	6.35

Original dimensions are inch except for dimension 'M'.

Tolerances are 0.005, unless otherwise stated.

+1)

Finish. In accordance with DEF-5000

VALVE ELECTRONIC **CV6180**

ADMIRALTY SURFACE WEAPONS ESTABLISHMENT

Specification AD/CV6180
Issue 1 Dated 18th September 1967.
To be read in conjunction with K1001, K1005, K1006 and MIL-E-IE and MIL-T-5422E. Paragraph numbers in reference column refer to MIL-E-IE unless otherwise st ted

SECURITY

Specification	Valve
Unclassified	Unclassified

PROTOTYPE: M5316

DESCRIPTION: Travelling Wave signal amplifier for operation from 4.0 to 7.5 GHz

CATHODE: Indirectly heated

ENVELOPE: Packaged in a periodic permanent magnet focussing system

CONNECTIONS & DIMENSIONS: See Drawing Page 8

WEIGHT: 5.5 lb. max.

NOMINAL R.F. INPUT & OUTPUT IMPEDANCE: 50 ohms

MOUNTING POSITION: Any

COOLING: Free Convection

NATO STOCK NO. 5960-99-037-4622

Parameter Unit:	Ef V	If A	Ec1 Vdc	Ic1 uAdc	Ec2 Vdc	Ic2 uAdc	Ec3 Vdc	Ic3 uAdc	Ec4 Vdc	Ic4 uAdc
ABSOLUTE MAXIMUM RATINGS (Note 1)										
Maximum:	6.6	---	0	50	100	50	200	50	400	50
Minimum:	6.0	---	-250	---	---	--	---	--	---	--
TEST CONDITION:										
(1)	0	0	0	0	0	0	0	0	0	0
(2)	6.3	---	Note 2,3	--	Note 2,3	--	Note 2,3	--	Note 2,3	--

Parameter: Unit:	Ec5 Vdc	Ic5 uAdc	Ew Vdc	Iw mAdc	Eb Vdc	Ib mAdc	Ik mAdc	Pi(rf) dBm	Amb.Temp. Deg.C	tk sec	If (surge) A
ABSOLUTE MAXIMUM RATINGS (Note 1)											
Maximum:	650	50	950	1.0	Ew+ 250	1.5	1.5	30	100	--	1.5
Minimum:	---	--	550	---	Ew	---	---	--	-65	60	---
TEST CONDITION:											
(1)	0	0	0	0	0	0	0	as reqd	---	0	0
(2)	Note 2,3	--	Note 2,3 4,5.	--	Note 2,3,4	--	Note 33	as reqd	---	Note 33	---

Requirements or tests:

General

Marking - Notes 2, 9 & K.1001, Section 4.

Dimensions - Per Outline Drawing

Preparation for Delivery - Note 31.

TEST	METHOD OR PARA.	REQUIREMENT OR TEST	CONDITIONS	SYMBOL	LIMITS MIN.	LIMITS MAX.	UNITS
		QUALIFICATION INSPECTION (Qualification Approval).					
1.	---	Humidity - Temperature	Test Condition (1) Note 11.	-	-	-	-
2.	---	Container Drop	Note 6, 16	-	-	-	-
3.	---	Shock	Test Condition (2) Note 16,17	-	-	-	-
		QUALITY CONFORMANCE INSPECTION, Part 1 (100%)	After 48 hours Holding Period				
4.	E-50.2	Post Holding Period Tests					
4.1	---	Grid Current	Test Condition (2)	Ic1	-10	+20	uAdc
				Ic2	-10	+20	uAdc
				Ic3	-10	+20	uAdc
				Ic4	-10	+20	uAdc
				Ic5	-10	+20	uAdc
4.2	---	Helix Current	Test Condition (2)	Iw	-10	100	uAdc
4.3	E-1301	Heater Current	Test Condition (1) Ef = 6.3	If	0.19	0.26	A
4.4	---	Cathode Current	Test Condition (2)	Ik	0.4	1.5	mA
4.5	---	Collector Current	Test Condition (2)	Ib	0.3	1.5	mA
4.6	---	Noise Figure	Test Condition (2) Note 10, 18, 20, 35	NF	Note 35		
4.7	---	Gain	Test Condition (2) Note 10, 18, 21. F=F1;F2;F3;F4.	Gss	35	Note 35 45	dB
4.8	---	Frequency Gain Variation	Test Condition (2) Note 19,21	ΔGss	-	5	dB
4.9	---	Saturation Power Output	Test Condition (2) Note 10, 18, 22. F=F1;F2;F3;F4.		7	18	dBm
4.10	---	Power Gain	Test Condition (2) Note 10, 18, 23. F=F1;F2;F3;F4.	Gp	Note 24	-	-
4.11	---	Input Match	Test Condition (2) Note 26.	VSWR	-	2.5	ratio
4.12	---	Output Match	Test Condition (2) Note 26.	VSWR	-	2.5	ratio
4.13	---	Stability	Test Condition (2), No rf input Note 32		No oscillations		

TEST	METHOD OR PARA.	REQUIREMENT OR TEST	CONDITIONS	SYMBOL	LIMITS MIN.	LIMITS MAX.	UNITS
		QUALITY CONFORMANCE INSPECTION, Part 3.					
5	---	Magnetic Shielding	Test Condition (2), Note 7,8	-	-	-	-
6	---	Temperature	Test Condition (2) Note 10, 12, 13, 29. F=F1;F2;F3;F4.	-	-	-	-
7	---	Vibration	Test Condition (2) Note 7, 14, 15, 16.	-	-	-	-
8	---	Insertion Loss	Test Condition (1) Note 7, 25.	L	55	-	dB
9		Life Test	Test Condition (2) Note 10, 27, 28, 29, 30 F=F1;F2;F3;F4.	t	1000	-	hours
10		Life Test End Points	Test Condition (2) Note 10. F=F1;F2;F3;F4.	-	Note 30		-

NOTES

Note 1: The absolute maximum ratings define the upper limits of electrical inputs which may be applied to the tube without danger of permanent damage. (MIL-E-I, Para 6.5). The electrical input ratings necessary to provide the required tube performance are specified elsewhere.

Note 2: The tube operating voltages and currents shall be listed on a label affixed to the tube. The voltages shall fall within the following limits:

Element	Minimum Voltage	Maximum Voltage
Heater	6.24	6.36
Grid 1	-50	5
Grid 2	5	50
Grid 3	5	120
Grid 4	5	200
Grid 5	100	500
Helix	650	950
Collector	Ew+5	Ew+210

All voltages are measured with respect to cathode.

NOTES (Cont'd)

Note 3: In order to maintain the specified performance over the specified temperature range, the following power supply requirements must be met:

Element	Installation Accuracy (±%)	Stability (±%) (Long term variation)	Ripple (volts pk to pk) (Short term variation)
Heater	1.0	1.0	
Grid 1	0.15	1.0	0.020
Grid 2	-	1.0	0.020
Grid 3	0.15	1.0	0.020
Grid 4	0.15	1.0	0.050
Grid 5	0.15	1.0	0.050
Helix	0.15	0.25	0.050
Collector	0.15	5.0	10.0

(a) Installation accuracy is set on accuracy at 20°C.

(b) Stability includes power supply variations from all causes including temperature.

Note 4: Tube may be operated with any one of the following elements at capsule potential:

Cathode
Helix
Collector

Note 5: The symbols and abbreviations used are defined in MIL-E-1E, except as follows:

Iw	Helix Current
Ew	Helix Voltage
GHz	10^9 Hz
Gss	Small Signal Gain
Gp	Power Gain
L	Insertion Loss
dBm	dB relative to 1 milliwatt

Note 6: The tube shall be packed in its regular shipping container and the packaged tube subjected to the drop tests specified in K.1005. There shall be no mechanical damage following the drop tests.

Note 7: These tests shall be performed on one tube every 6 months when the tube is in continuous production or one tube per 100 tubes, whichever comes sooner. In the event of a failure, corrective action shall be taken by the manufacturer and the Approval Authority informed.

NOTES (Cont'd.)

Note 8: The tube under test shall be mounted parallel with, and at a distance not greater than 3" between centres from another CV6180, on a steel plate which is 18" square by $\frac{1}{2}$" thick. The tube under test shall operate within the limits specified for each test listed under Quality Conformance Inspection Part 1. (Tests 4.1 through 4.13)

Note 9: A label shall be fixed to the body of each tube. The label shall be indelibly marked "Magnetised Materials".

Note 10: The test frequencies Fn are defined as follows:

Designation	Frequency (GHz)
F1	4.0
F2	5.0
F3	6.0
F4	7.5

Note 11: Follow procedure of MIL-T-5422E.

Note 12: The results of all performance measurements shall be recorded. These measurements shall be of the Grid and Helix currents, Gain, Saturation Power Output and Noise Figure as specified in Quality Conformance Part 1. The Temperature test shall be performed as follows:

Affix a temperature indicating device to the capsule outside diameter at a point approximately bisecting the tube length,

Step	Condition	Time at Indicated Capsule Temperature Prior to measurements	Measurements
1	Room ambient temp. Normal test rig outside chamber	-	Required Record ambient temp.
2	Room temp. as in Step 1 but with tube in chamber	-	Required
3	Adjust chamber to -10°C	40 minutes	Required
4	" " " -62°C	1 Hour	Not required
5	" " " 45°C	2 Hours 10 Min.	Required
6	" " " 70°C	30 Minutes	Required
7	" " " 90°C	25 Minutes	Required
8	Room ambient temp. Normal test rig outside chamber	1 Hour 25 Min.	Required Record ambient temp.

Note 13: Where measured, the performance at the operating temperatures shall be compared with the performance at Step 2 (Note 12) and the differences shall not exceed the following limits:

Performance	Limits
Gain	± 3 dB
Saturation Power Output	± 1.5 dB
Noise Figure	± 2 dB

The grid and helix currents shall not exceed the following limits:

Grid Currents	As specified in test 4.1.
Max.Helix Current	150 uA d.c. for steps 3 and 5 in Note 12
	350 uA d.c. for steps 6 and 7 in Note 12

There shall be no change greater than Measurement Error (Note 34) in performance between Steps 1 and 8 (Note 12). In the event of a failure the Approval Authority shall be informed immediately.

NOTES (Cont'd.)

Note 14. Measure gain using a swept frequency technique. Gain variation due to resonances during the test shall be less than 0.5 dB at any frequency between 4.0 and 7.5 GHz.

Note 15: The tube shall be vibrated in three mutually perpendicular directions successively, one of which shall be the major axis.

(a) Resonance search: 5 to 55 Hz at ± 0.010"amplitude, 1 Hz steps, 15 secs each. Record resonant frequencies.

(b) 5 to 15 Hz at ± 0.030" amplitude, 1 Hz steps; 2 minutes/step
16 to 25 Hz at ±0.020" amplitude, 1 Hz steps, 2 minutes/step
26 to 55 Hz at ±0.010" amplitude, 1 Hz steps, 2 minutes/step
Record resonant frequencies.

(c) 2 hours at resonances.

Note 16: Before and after this test, perform Quality Conformance Inspection tests 4.6, 4.7 and 4.9. There shall be no change greater than the limits of Measurement Error (Note 34).

Note 17: Following the procedure of MIL-T-5422E subject the operating tube, with no rf input and at the prevailing room temperature, to 18 impact shocks of 30G and a time duration of 11 ± 1 ms. Three impact shocks shall be applied in each direction to the tube in each of three mutually perpendicular axes.

Note 18: At the discretion of the manufacturer, a swept frequency signal source may be employed and the performance recorded continuously over the frequency band.

Note 19: Frequency Gain Variation shall be measured using a swept frequency source over the operating band.

Note 20: Noise mounts of A.I.L. manufacture having part nos. 07049, 07050 shall be assumed to have a relative excess noise temperature of 15.3 dB.

Note 21: Gain tests shall be performed with input power adjusted to give an output power level of 1 milliwatt.

Note 22: The Saturation Power Output test shall be performed as follows:

At each frequency, increase the power input until the first power output peak is reached, measure the power output at this value of power input.

Note 23: Power Gain is defined as the gain measured with the input power adjusted to give the power output obtained using the setting procedure specified in Note 22.

Note 24: Power Gain shall be not less than the value of Gss - 8 dB.

Note 25: The Insertion Loss shall be measured across the frequency band using a swept frequency technique.

Note 26: The VSWR at the relevant connector shall be measured across the frequency band using a swept frequency technique, the other connector being terminated in a matched load.

Note 27: The tube selected for this test shall have passed the acceptance tests (Quality Conformance Inspection, Part 1), or have the approval of the Inspecting Officer.

Note 28: Before the life tests and at 50, 100, 200, 500 and 1000 hours, the electrode currents, the gain, saturated power output and noise figure shall be measured.

NOTES (Cont'd)

Note 29: This test shall be one tube per lot where lot size shall consist of 25 tubes or 1 month's production, whichever is the greater.

Note 30: The End of Life is defined as the time at which any of the following changes occur:-

Helix current exceeds the specified limits.
Grid current exceeds the specified limits.
Gain changes by more than 2 dB.
Sat Power Output changes by more than 2 dB.
Noise Figure changes by more than 1 dB.

In the event of a failure the Approval Authority shall be informed.

Note 31: Preservation, packaging and packing. Unless otherwise specified in the contract or order, preservation, packaging and packing shall be according to J.S. Specification K1005.

Note 32: With the tube input and output separately terminated in a short, the phase of the mismatch shall be varied by 360 electrical degrees and helix voltage swept plus and minus 2 per cent from its optimum value at a 50 to 400 cycle rate. The detected tube output shall be viewed as the vertical deflection on an oscilloscope and the helix voltage as the horizontal deflection. The sensitivity of the test circuit shall be that necessary to indicate the tube noise output. The onset of oscillation is observed as a discontinuity in the oscilloscope trace.

Note 33: Installation and alignment shall be as follows:-

(a) Connect power supply and rf lines to the TWT

(b) Apply rated heater voltage for a period of two minutes. The full rated heater voltage may be applied instantaneously.

(c) Set grid 2 to zero volts, and set all other elements to voltages shown on the tube label.

(d) Turn up the voltage on grid 2 until the collector current reaches the value shown on the tube label. Grid 2 voltage shall then be approximately that shown on the label. Collector current shall be set to an accuracy of 1%.

(e) After initial installation and setting of voltages, subsequent turn-on procedure may be as follows:-

1. Same as (b).

2. All other voltages may then be immediately turned on to the preset values with the proviso that the grid 2 voltage is not achieved before the helix voltage.

Note 34: Measurement Error shall be defined as:-

Gain	$\pm$1 dB
Sat. Power O/P	$\pm$1 dB
Noise	$\pm$0.5 dB

Note 35: The Noise Figure may fluctuate between maxima of 11 dB and 11.5 dB throughout the operating frequency range. The minimum total bandwidth over which the N.F. shall not exceed 11 dB is 3000 MHz; the maximum total bandwidth over which the N.F. may exceed 11 dB but not exceed 11.5 dB is 250 MHz.

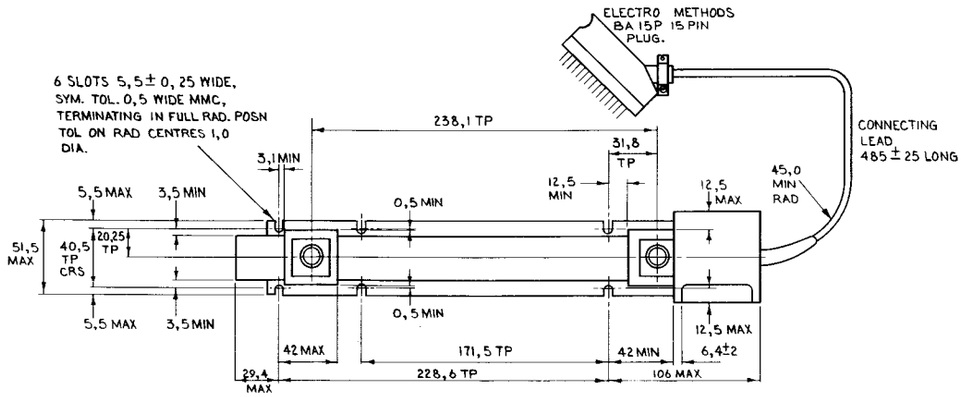

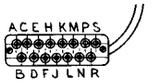

PIN	CONNECTION	COLOUR
A	N.C.	—
B	N.C.	—
C	GRID 1	GREEN
D	HELIX	ORANGE
E	COLLECTOR	RED
F	GRID 4	WHITE
H	GRID 3	GREY
J	GRID 2	BLUE
K	GRID 5	GRN/BLK/TR
L	CATHODE	YELLOW
M	HEATER	BROWN
N	HEATER CATHODE	YELLOW
P	CAPSULE/GRID	BLACK
R	N.C.	—
S	N.C.	—

NOTE: NO CONNECTION IS TO BE MADE TO PINS A, B, R & S.

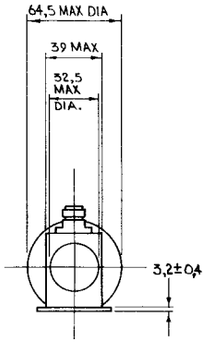

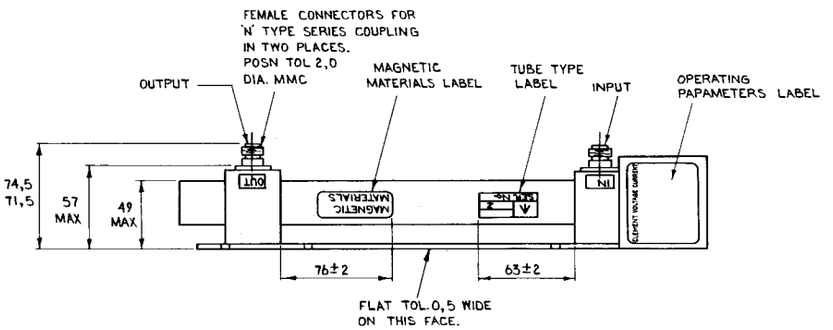

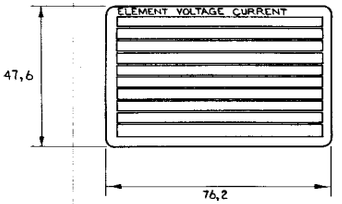

NOTE
LETTERS 1,5 HIGH, AND BOXES TO BE ALUMINIUM ON ANODISED MATT BLUE GROUND.

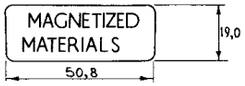

NOTE:-
BLACK LETTERS 5,5 HIGH ON CANARY YELLOW GROUND, THE WORDS "MAGNETIZED MATERIALS" TO BE CENTRALLY LOCATED.

FINISH:- FERROUS COMPONENTS BLACKENED AND PRIMED WITH PAINT TO C.S.2307A IN ACCORDANCE WITH DEF. 5000 PART 7, SECTION 5, PARA 2b TOP COAT LIGHT GREY EGGSHELL PAINT TO C.S. 2308 A IN ACCORDANCE WITH DEF. 5000 PART 7 R.F. CONNECTORS BRIGHT SILVER PLATED.

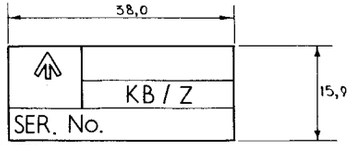

NOTES:
1. BROAD ARROW 4,8 HIGH CHARACTERS TO BE 2,5 HIGH.
2. COLOUR WHITE CHARACTERS ON BLACK BACKGROUND.

OUTLINE DRAWING OF TUBE

DIMENSIONS IN mm

CV 6180/1/8

VALVE ELECTRONIC **CV6181**

ADMIRALTY SURFACE WEAPONS ESTABLISHMENT

Specification AD/CV 6181 Issue 1 Dated 20th October 1967. To be read in conjunction with K1001, K1005, K1006, MIL-E-IE and MIL-T-5422E. Paragraph numbers in reference column refer to MIL-E-IE unless otherwise stated	SECURITY Specification: Unclassified Valve: Unclassified

PROTOTYPE: M5317

DESCRIPTION: Travelling Wave signal amplifier for operation from 7.5 to 12 GHz

CATHODE: Indirectly heated

ENVELOPE: Packaged in a periodic permanent magnet focussing system

CONNECTIONS & DIMENSIONS: See Drawing Page 9

WEIGHT: 5.0 lb. max.

NOMINAL R.F. INPUT & OUTPUT IMPEDANCE: 50 ohms

MOUNTING POSITION: Any

COOLING: Free Convection

NATO STOCK NO. 5960-99-037-4623

Parameter:	Ef	If	Ec1	Ic1	Ec2	Ic2	Ec3	Ic3	Ec4	Ic4		
Unit:	V	A	Vdc	uAdc	Vdc	uAdc	Vdc	uAdc	Vdc	uAdc		
ABSOLUTE MAXIMUM RATINGS (Note 1)												
Maximum:	6.6	---	0	50		150		50	500	50	1000	50
Minimum :	6.0	---	-250	---		---		--	---	--	----	--
TEST CONDITION:												
(1)	0	0	0	0		0	0		0	0	0	0
(2)	6.3	---	Note 2,3	--	Note 2,3		--	Note 2,3		--	Note 2,3	--

Parameter:	Ew	Iw	Eb	Ib	Ik	Pi(rf)	Amb.Temp.	tk	If (surge)
Unit:	Vdc	mAdc	Vdc	mAdc	mAdc	dBm	Deg.C	sec	A
ABSOLUTE MAXIMUM RATINGS (Note 1)									
Maximum	1500	1.0	Ew+ 250	1.0	1.0	30	100	—	1.5
Minimum	950	---	Ew	---	---	---	-65	60	---
TEST CONDITION:									
(1)	0	0	0	0	0	as reqd	---	0	0
(2)	Note 2,3, 4,5	—	Note 2,3,4	--	Note 33	as reqd	---	Note 33	---

Requirements or tests:

General

Marking - Note 2, 9 and K.1001, Section 4.

Dimensions - Per Outline Drawing

Preparation for Delivery - Note 31.

TEST	METHOD OR PARA.	REQUIREMENT OR TEST	CONDITIONS	SYMBOL	LIMITS MIN.	LIMITS MAX.	UNITS
		QUALIFICATION INSPECTION (Qualification Approval)					
1.	---	Humidity - Temperature	Test Condition (1) Note 11.	-	-	-	-
2.	---	Container Drop	Note 6,16.	-	-	-	-
3.	---	Shock	Test Condition (2) Note 16,17	-	-	-	-
		Quality Conformance Inspection, part 1 (100%)	After 48 hours Holding Period				
4.	E-50.2	Post Holding Period Tests					
4.1	---	Grid Current	Test Condition (2)	Ic1	-10	+20	uAdc
				Ic2	-10	+20	uAdc
				Ic3	-10	+20	uAdc
				Ic4	-10	+20	uAdc
				Ic5	-10	+20	uAdc
4.2	---	Helix Current	Test Condition (2)	Iw	-10	200	uAdc
4.3	E-1301	Heater Current	Test Condition (1) Ef = 6.3	If	0.19	0.26	A
4.4	---	Cathode Current	Test Condition (2)	Ik	0.4	1.0	mA
4.5	---	Collector Current	Test Condition (2)	Ib	0.3	1.0	mA
4.6	---	Noise Figure	Test Condition (2) Note 10,18,20 F1,F4,F5,F6,F7				
			7.5 to 10.75 GHz		-	11	dB
			>10.75 to 11 GHz		-	11.5	dB
			>11.0 to 11.5 GHz		-	12	dB
			>11.5 to 12 GHz		-	12.5	dB
4.7	---	Gain	Test Condition (2) Note 10,18,21	Gss			
			7.5 to 11 GHz		35	40	dB
			11 to 12 GHz		30	40	dB
4.8	---	Frequency Gain Variation	Test Condition (2) Note 19,21	ΔGss	-	8	dB
4.9	---	Saturation Power Output	Test Condition (2) Note 10,18,22. F=F1:F2:F3;F4;F7	Po	7	18	dBm
4.10	---	Power Gain	Test Condition (2) Note 10,18,23. F=F1;F2;F3;F4;F7	Gp	Note 24	-	-

TEST	METHOD OR PARA.	REQUIREMENT OR TEST	CONDITIONS	SYMBOL	LIMITS MIN.	LIMITS MAX.	UNITS
4.11	---	Input Match	Test Condition (2) Note 26	VSWR	-		ratio
4.12	---	Output Match	Test Condition (2) Note 26	VSWR	-		ratio
4.13	---	Stability Quality conformance inspection, part 3	Test Condition (2), No rf input Note 32	Po	No oscillations		
5	---	Magnetic Shielding	Test Condition (2), Note 7,8.	-	-	-	-
6	---	Temperature	Test Condition (2) Note 10,12,13,29 F=F1;F2;F3;F4;F7.	-	-	-	-
7	---	Vibration	Test Condition (2) Note 7,14,15,16	-	-	-	-
8	---	Insertion Loss	Test Condition (1) Note 7,25,	L	55	-	dB
9		Life Test	Test Condition (2) Note 10,27,28,29. F=F1;F2;F3;F4;F7.	t	1000	-	hours
10		Life Test End Points	Test Condition (2) Note 10. F=F1;F2;F3;F4;F7.	-	Note	30.	-

NOTES

Note 1: The absolute maximum ratings define the upper limits of electrical inputs which may be applied to the tube without danger of permanent damage (MIL-E-1, Para. 6.5). The electrical input ratings necessary to provide the required tube performance are specified elsewhere.

Note 2: The tube operating voltages and currents shall be listed on a label affixed to the tube. The voltages shall fall within the following limits:

Element	Minimum Voltage	Maximum Voltage
Heater	6.24	6.36
Grid 1	-50	5
Grid 2	5	50
Grid 3	5	250
Grid 4	75	500
Helix	1100	1300
Collector	Ew+5	Ew+210

All voltages are measured with respect to cathode.

NOTES (Cont'd)

Note 3: In order to maintain the specified performance over the specified temperature range, the following power supply requirements must be met:

Element	Installation Accuracy (±%)	Stability (±%) (Long term variation)	Ripple (volts pk. to pk) (Short term variation)
Heater	1.0	1.0	
Grid 1	0.15	1.0	0.020
Grid 2	-	1.0	0.020
Grid 3	0.15	1.0	0.020
Grid 4	0.15	1.0	0.050
Grid 5	0.15	1.0	0.050
Helix	0.15	0.25	0.050
Collector	0.15	5.0	10.0

(a) Installation accuracy is set on accuracy at 20°C.

(b) Stability includes power supply variations from all causes including temperature.

Note 4: Tube may be operated with any one of the following elements at capsule potential:

Cathode
Helix
Collector

Note 5: The symbols and abbreviations used are defined in MIL-E-IE, except as follows:

Iw	Helix Current
Ew	Helix Voltage
GHz	10^9 Hz
Gss	Small Signal Gain
Gp	Power Gain
L	Insertion Loss
dBm	DB relative to 1 milliwatt

Note 6: The tube shall be packed in its regular shipping container and the packaged tube subjected to the drop tests specified in K.1005. There shall be no mechanical damage following the drop tests.

Note 7: These tests shall be performed on one tube every 6 months when the tube is in continuous production or one tube per 100 tubes, whichever comes sooner. In the event of a failure, corrective action shall be taken by the manufacturer and the Approval Authority informed.

Note 8: The tube under test shall be mounted parallel with, and at a distance not greater than 3" between centres from another CV6181, on a steel plate which is 18" square by ½" thick. The tube under test shall operate within the limits specified for each test listed under Quality Conformance Inspection Part 1. (Tests 4.1 through 4.13)

NOTES (Cont'd)

Note 9: A label shall be fixed to the body of each tube. The label shall be indelibly marked "Magnetized Materials".

Note 10: The test frequencies Fn are defined as follows:

Designation	Frequency (GHz)
F1	7.5
F2	8.25
F3	9.5
F4	10.75
F5	11.0
F6	11.5
F7	12.0

Note 11: Follow procedure of MIL-T-5422E

Note 12: The results of all performance measurements shall be recorded. These measurements shall be of the Grid and Helix currents, Gain, Saturation Power Output and Noise figure as specified in Quality Conformance Part 1.

The Temperature test shall be performed as follows:

Affix a temperature indicating device to the capsule outside diameter at a point approximately bisecting the tube length.

Step	Condition	Time at Indicated Capsule Temperature Prior to Measurements	Measurements
1	Room ambient temp. Normal test rig outside chamber	-	Required record ambient temp.
2	Room temp. as in Step 1 but with tube in chamber	-	Required
3	Adjust chamber to $-10^{\circ}C$	40 Minutes	Required
4	" " $-62^{\circ}C$	1 hour	Not required
5	" " $45^{\circ}C$	2 hours 10 Min	Required
6	" " $70^{\circ}C$	30 Minutes	Required
7	" " $90^{\circ}C$	25 Minutes	Required
8	Room ambient temp. Normal test rig outside chamber.	1 hour 25 Min.	Required Record ambient temp.

Note 13: Where measured, the performance at the operating temperatures shall be compared with the performance at Step 2 (Note 12) and the differences shall not exceed the following limits:

Performance	Limits
Gain	± 3 dB
Saturation Power Output	± 1.5 dB
Noise Figure	± 2 dB

NOTES (Cont'd)

The grid and helix currents shall not exceed the following limits:

Grid Currents	As specified in test 4.1
Max Helix Current	150 uA d.c. for steps 3 and 5 in Note 12
	350 uA d.c. for steps 6 and 7 in Note 12

There shall be no change greater than Measurement Error (Note 34) in performance between Steps 1 and 8 (Note 12). In the event of a failure the Approval Authority shall be informed immediately.

Note 14: Measure gain using a swept frequency technique. Gain variation due to resonances during the test shall be less than 0.5 dB at any frequency between 7.5 and 12 GHz.

Note 15: The tube shall be vibrated in three mutually perpendicular directions successively, one of which shall be the major axis.

(a) Resonance search: 5 to 55 Hz at ± 0.010" amplitude, 1 Hz steps, 15 secs each. Record resonant frequencies.

(b) 5 to 15 Hz at ± 0.030" amplitude, 1 Hz steps, 2 minutes/step.
16 to 25 Hz at ± 0.020" amplitude, 1 Hz steps, 2 minutes/step.
26 to 55 Hz at ± 0.010" amplitude, 1 Hz steps, 2 minutes/step.
Record resonant frequencies.

(c) 2 hours at resonances.

Note 16: Before and after this test, perform Quality Conformance Inspection tests 4.6; 4.7 and 4.9. There shall be no change greater than the limits of Measurement Error (Note 34).

Note 17: Following the procedure of MIL-T-5422E subject the operating tube, with no rf input and at the prevailing room temperature, to 18 impact shocks of 30G and a time duration of 11 ± 1 ms. Three impact shocks shall be applied in each direction to the tube in each of three mutually perpendicular axes.

Note 18: At the discretion of the manufacturer, a swept frequency signal source may be employed and the performance recorded continuously over the frequency band.

Note 19: Frequency Gain Variation shall be measured using a swept frequency source over the operating band.

Note 20: Noise mounts of A.I.L. manufacture having part nos. 07051 and 07052 shall be assumed to have a relative excess noise temperature of 15.3 dB.

Note 21: Gain tests shall be performed with input power adjusted to give an output power level of 1 milliwatt.

Note 22: The Saturation Power Output test shall be performed as follows: At each frequency, increase the power input until the first power output peak is reached, measure the power output at this value of power input.

NOTES (Cont'd)

Note 23: Power Gain is defined as the gain measured with the input power adjusted to give the power output obtained using the setting procedure specified in Note 22.

Note 24: Power Gain shall be not less than the value of Gss - 8 dB.

Note 25: The Insertion Loss shall be measured across the frequency band using a swept frequency technique.

Note 26: The VSWR at the relevant connector shall be measured across the frequency band using a swept frequency technique, the other connector being terminated in a matched load.

Note 27: The tube selected for this test shall have passed the acceptance tests (Quality Conformance Inspection, Part 1), or have the approval of the Inspecting Officer.

Note 28: Before the life tests and at 50, 100, 200, 500 and 1000 hours, the electrode currents, the gain, saturated power output and noise figure shall be measured.

Note 29: This test shall be one tube per lot where lot size shall consist of 25 tubes or 1 month's production, whichever is the greater.

Note 30: The End of Life is defined as the time at which any of the following changes occur :-

Helix current exceeds the specified limits.
Grid current exceeds the specified limits.
Gain changes by more than 2 dB.
Sat Power Output changes by more than 2 dB.
Noise Figure changes by more than 1 dB.

In the event of a failure the Approval Authority shall be informed.

Note 31: Preservation, packaging and packing. Unless otherwise specified in the contract or order, preservation, packaging and packing shall be according to J.S.Specification K1005.

Note 32: With the tube input and output separately terminated in a short, the phase of the mismatch shall be varied by 360 electrical degrees and helix voltage swept plus and minus 2 per cent from its optimum value at a 50 to 400 cycle rate. The detected tube output shall be viewed as the vertical deflection on an oscilloscope and the helix voltage as the horizontal deflection. The sensitivity of the test circuit shall be that necessary to indicate the tube noise output. The onset of oscillation is observed as a discontinuity in the oscilloscope trace.

Note 33: Installation and alignment shall be as follows:-

(a) Connect power supply and rf lines to the TWT

(b) Apply rated heater voltage for a period of two minutes. The full rated heater voltage may be applied instantaneously.

(c) Set grid 2 to zero volts, and set all other elements to voltages shown on the tube label.

(d) Turn up the voltage on grid 2 until the collector current reaches the value shown on the tube label. Grid 2 voltage shall then be approximately that shown on the label. Collector current shall be set to an accuracy of 1%.

(e) After initial installation and setting of voltages, subsequent turn-on procedure may be as follows:-

1. Same as (b).

2. All other voltages may then be immediately turned on to the preset values with the proviso that the grid 2 voltage is not achieved before the helix voltage.

Note 34. Measurement Error shall be defined as :-

Gain:	± 1 dB
Sat.Power O/P :	± 1 dB
Noise:	± 0.5 dB

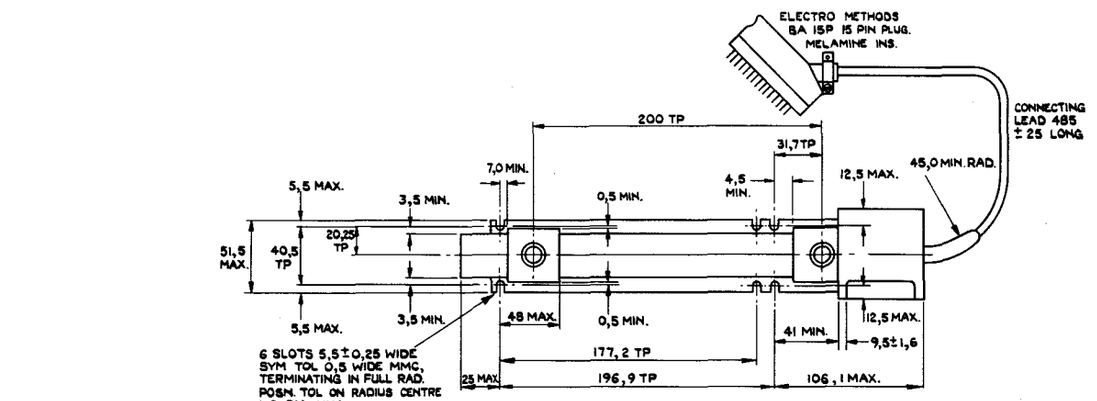

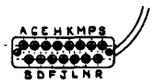

PIN	CONNECTION	COLOUR
A	N.C.	—
B	N.C.	—
C	GRID 1	GREEN
D	HELIX	ORANGE
E	COLLECTOR	RED
F	GRID 4	WHITE
H	GRID 3	GREY
J	GRID 2	BLUE
K	N.C.	—
L	CATHODE	YELLOW
M	HEATER	BROWN
N	HEATER CATHODE	YELLOW
P	CAPSULE GRD	BLACK
R	N.C.	—
S	N.C.	—

NOTE: NO CONNECTION IS TO BE MADE TO PINS A, B, K, R & S

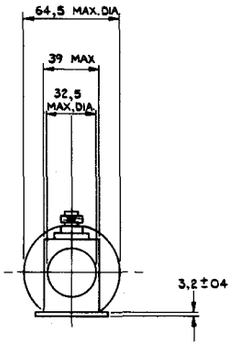

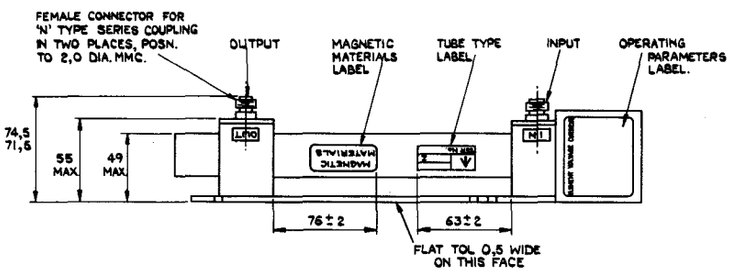

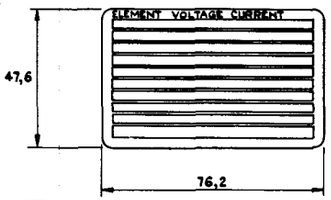

NOTE:-
LETTERS 1,5 HIGH, AND BOXES TO BE ALUMINIUM ON ANODISED MATT BLUE GROUND.

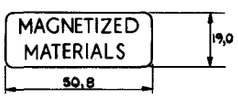

NOTE:-
BLACK LETTERS 5,5 HIGH ON CANARY YELLOW GROUND.
THE WORDS 'MAGNETIZED MATERIALS' TO BE CENTRALLY LOCATED.
FINISH:- FERROUS COMPONENTS BLACKENED AND PRIMED WITH PAINT TO CS 2307A IN ACCORDANCE WITH DEF 5000 PART 7, SECTION 5, PARA 2b.
TOP COAT LIGHT GREY EGGSHELL PAINT TO CS 2308A IN ACCORDANCE WITH DEF 5000 PART 7.
R.F. CONNECTORS BRIGHT SILVER PLATED.

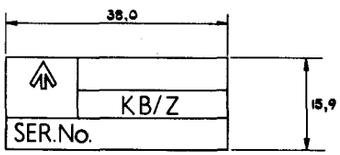

NOTES:-
1. BROAD ARROW 4,8 HIGH. CHARACTERS TO BE 2,5 HIGH.
2. COLOUR:- WHITE CHARACTERS ON BLACK BACKGROUND.

OUTLINE DRAWING OF TUBE

DIMENSIONS IN mm

CV6181/1/9

VALVE ELECTRONIC

CV 6184

ADMIRALTY SURFACE WEAPONS ESTABLISHMENT

Specification AD/CV 6184 Issue 1 Dated 4.5.67 To be read in conjunction with K1006	SECURITY Specification: Unclassified	Valve: Unclassified

PROTOTYPE: 4CX10,000D

DESCRIPTION: Ceramic and metal, forced air cooled tetrode

CATHODE: Directly heated thoriated Tungsten

MOUNTING: Vertical, base down or up, with protection from severe shock and vibration

CONNECTIONS AND DIMENSIONS: See figure 1.

N.A.T.O. STOCK NUMBER: 5960-99-037-4627

ABSOLUTE MAXIMUM RATINGS:

Parameter	Ef	Eb	Ec2	Ec1	Ib	Pg1	Pg2	Pp	Anode & Seal T	Core Cooling Note 1	Altitude
Units	Vac	kVdc	kVdc	Vdc	Adc	W	W	kW	°C		ft.
C Telegraphy (up to 100 Mc)	7.5 ±5%	7.5	1.5		3.0	75	250	10.0	250		10,000
C Telephony	7.5 ±5%	5.0	1.0		2.5	75	250	6.65 Note 2	250		10,000
Class AB	7.5 ±5%	7.5	1.5		4.0	75	250	12.0	250		10,000
Test Condition	7.5	2.0	0.75	adj	1.0					Note 3	

PARA. NO.	TEST	CONDITIONS	AQL (PERCENT DEFECTIVE)	INSP. LEVEL	SYMBOL	LIMITS Min.	LIMITS Max.	UNITS
	General							
3.1	Qualification	Required	-	-	-	-	-	-
3.6	Performance	Note 4	-	-	-	-	-	-
4.5	Holding Period		-	-	t	150	-	hr.
4.9.2	Dimensions	See figure 1 Note 5	-	-	-	-	-	-

PARA. NO.	TEST	CONDITIONS	AQL (PERCENT DEFECTIVE)	INSP. LEVEL	SYMBOL	LIMITS Min.	LIMITS Max.	UNITS
	Acceptance Inspection Part 1 (Production) See Note 6							
4.9.1	Mech. Prod. Tests		-	-	-	-	-	-
4.10.8	Filament Current		0.65	II	If:	72	78	Aac
4.10.5.2	Grid Voltage		0.65	II	-Ec1:	-95	127	Vdc
4.10.4.1	Anode Current	Eb = 5 kV, Ec2 = 500V, Ec1 = -150V	0.65	II	Ib	-	100	mA
4.10.6.1	†Total Grid Current (1) Note 10	Eb = 10 kV, Ec2 = 1500V Ib = 1A Note 3 After 10 mins.	0.65	II	-Ic1:	-	45	μAdc
					-Ic1	-	40	μAdc
4.10.4.3	Screen Grid Current		0.65	II	Ic2:	-	15.0	mAdc
4.10.6.6	Primary Control - Grid Emission	Ic1 = 600 mAdc, t = 15; anode & screen grid floating	0.65	II	-Isg1	-	20	μAdc
4.10.6.6	Primary Screen - Grid Emission	Ec1 = 0 Vdc, t = 15; Ic2 = 550 mAdc; anode floating	0.65	II	-Isg2	-	60	μAdc
4.10.1.3	†Peak Emission (1) Note 10	eb = ec1 = ec2 = 2.5 kV	0.65	II	is:	53	-	a
	Acceptance Inspection Part 2 (Design) See Note 7							
4.10.14	Direct Interelectrode Capacitance (grounded cathode)	Note 8	6.5	S3	Cin	108.0	122.0	μμF
					Cout	18.0	23.0	μμF
					Cgp		1.0	μμF
4.10.14	Direct Interelectrode Capacitance (grounded grid)		6.5	S3	Cin	48.0	58.0	μμF
					Cout	18.0	23.0	μμF
					Cpk		0.16	μμF
	Current division	Eb = Ec2 = 1500 Vdc; ec1/ib = 11 a; Ec1 = -600 Vdc, tp = 2 μs min; prr = 50 pps min; Note 9	6.5	S3	ec1	-	0	V
					ic2		1.25	a

CV 6184

PARA. NO.	TEST	CONDITIONS	AQL (PER-CENT DEFECT-IVE)	INSP. LEVEL	SYMBOL	LIMITS Min.	LIMITS Max.	UNITS
	Power Output	R.F. Amplifier F = 27 to 29 Mc Eb = 7.5 kV Ec2 = 1500V Zero-signal Anode Current = 0.5A Adjust drive and Load for Ib = 2.8A Ic2 = 160 mA Time 30 mins. Note 3	6.5	S3	Po	10		kW
					Ic1	-1	1	mA
4.10.6.1	Total Grid Current (2) Note 11	As for Total Grid Current (1) After 10 mins.	6.5	S3	-Ic1	-	45	μAdc
							40	μAdc
4.10.1.3	Peak Emission (2) Notes 11 and 12	As for Peak Emission (1)	6.5	S3	is	53	-	a

NOTES

1. During operation forced air cooling of the base and anode must be provided to ensure that the maximum seal temperature ratings are not exceeded. The air flow must be applied before or simultaneously with the electrode voltages and should be maintained for two minutes after the voltages are removed.

2. Applies to carrier only conditions.

3. In the Total Grid Current and Power Output tests forced air cooling as stated in Note 1 shall be applied. In all other electrical tests forced air cooling in a base to anode direction is permitted at a rate of 50 cfm. maximum, with air at not less than 20°C for the base and anode. Separate sources may be used for the base and anode but neither shall provide more than 50 cfm.

4. The following paragraphs listed in para. 3.6 of K1006 shall apply:-
   3.7, 3.8, 4.1, 4.3, 4.4, 4.5, 4.6, 4.9.21.

NOTES (Contd.)

5. The following dimensions shall be measured on a Design basis, AQL 6.5, Inspection Level S3:- C, D, E, F, G, H, J, K, L, P, R and T. The following dimensions shall be measured on a sample of four tubes from the first production lot of each year, with no failures allowed:- A, B, M, N and S; in case of a failure, that dimension shall become a Design test for three successful consecutive lots, and may then revert to the once-a-year periodic basis. The indicated T.I.R. measurements shall also be on a Design basis.

6. These tests shall be carried out as standard production tests. Sampling as in DEF.131A may be used. The AQL for the combined defectives for attributes, excluding mechanical, shall be one percent. A tube having one or more defects shall be counted as one defective.

7. Sampling shall be in accordance with DEF.131A.

8. It shall be allowable to measure Cg1g2 and Cg1k separately, with all unused elements grounded in each case, and consider the sum to be equal to Cin.

9. Under the specified voltage conditions, the control grid is pulsed to produce an anode current of ib = 105 amperes. At this operating level, the pulse screen current shall not exceed the specified limit, and the instantaneous grid-cathode voltage may not exceed zero (that is, the grid may not be driven positive with respect to the cathode in order to produce the required anode current).

10. These tests are to be performed before the Power Output test.

11. These tests are to be performed after the Power Output test.

12. The values of peak emission shall not be less than 90% of that obtained in the Peak Emission (1) test.

CV6184

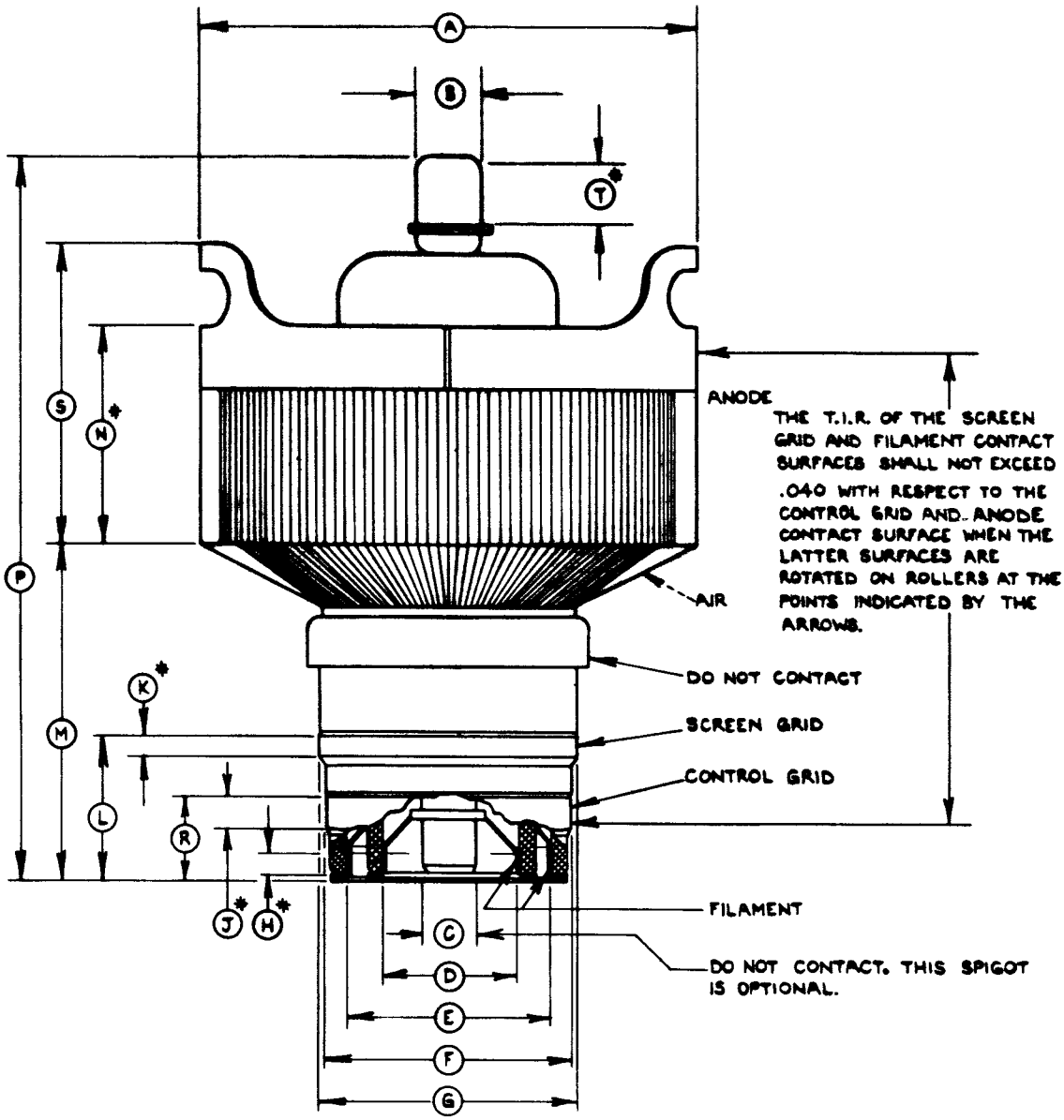

* CONTACT SURFACE.
ALL DIMENSIONS IN INCHES

DIMENSION DATA							
REF.	NOM.	MIN.	MAX.	REF.	NOM.	MIN.	MAX.
A		6.928	7.050	K		.188	
B		.855	.895	L		1.764	1.826
C		.720	.760	M		4.186	4.568
D		1.896	1.936	N		2.412	2.788
E		3.133	3.173	P		8.625	9.125
F		3.792	3.832	R		.986	1.050
G		3.980	4.020	S		3.412	3.788
H		.188		T		.375	
J		.188					

ELECTRONIC VALVE SPECIFICATIONS

VALVE ELECTRONIC CV6192

The requirements for Specification CV6192 are included on Specification Mintech/CV6178.

April 1968 T.V.C. for R.R.E.

NM.461742(T)

ELECTRONIC VALVE SPECIFICATIONS

VALVE ELECTRONIC CV6206

The requirements for Specification CV6206 are included on Specification Mintech/CV6178.

April 1968 T.V.C. for R.R.E.

NM.461743(T)

VALVE ELECTRONIC

CV6209-10
CV6211-12

Specification Min. Tech./CV 6209-10-11-12 Issue No. 1, Dated December 1967 To be read in conjunction with K1001 and DEF-133	SECURITY Valve: Unclassified Specification: Unclassified

TYPE OF VALVE: Miniature, Noise Generator

CATHODE: Cold

PROTOTYPE: VX9252

MARKING

See K1001/4

RATINGS
(Not for Inspection Purposes)

			Note
Striking Conditions			
Power Unit Open Circuit Voltage	(V)	200 $\pm 2\frac{1}{2}\%$	A
Transient Pulse Length	(μS)	10 $\pm 5\%$	A
Transient Pulse Voltage	(kV)	1.4 $\pm 5\%$	A
Nominal Operating Voltage (Ia = 100mA)	(V)	37	
Nominal Continuous Operating Current	(mA)	100	B
Nominal Noise Power (Ia = 100mA)	(dB)	13.2	C
Nominal Noise Power Output Change with Current	(dB/mA)	+0.012	
Maximum Frequency Range (V.S.W.R. = 0.85)			
CV6209	(GHz)	8.655 to 8.905	
CV6210	(GHz)	9.2 to 9.45	
CV6211	(GHz)	9.375 to 9.625	
CV6212	(GHz)	9.475 to 9.725	

DIMENSIONS

See drawing on page 4.

CONNECTIONS

Anode - Flexible lead

Cathode - Metal body Electrical connection to the cathode being made by the helicoil inserts in the flange faces.

MOUNTING POSITION

Any - See Note D

NOTES

A. The striking conditions required for gas discharge tubes are of a complex nature. The data given is to provide more concise information on this parameter rather than simpler less useful data.

B. Operating Current

100 mA is recommended for normal radar applications and 115 mA for Doppler type radar equipment. The figure of 115mA will be subject to an increase of nominal noise output of 0.13dB.
When the tube is run at 100mA some low frequency oscillations may occur which in normal radar applications can be disregarded but may be disadvantageous in Doppler equipments. 115mA will ensure the lack of parasitic oscillation.

C. Relative to thermal noise at 17°C.

D. To ensure the minimum spread of noise output with aerial and feed mismatch, the source should be mounted with the iris loaded end nearest the receiver. This end can be identified as being adjacent to the lead-out wire.

E. NATO STOCK NUMBERS:-

CV6209	5960-99-037-5583
CV6210	5960-99-037-5584
CV6211	5960-99-037-5585
CV6212	5960-99-037-5586

To be performed in addition to those applicable in K1001

Test Frequencies:-

f_1 =	CV 6209	8.780 GHz ± 5MHz	f_2 =	CV_{6209}	8.655 GHz ± 5MHz
	CV 6210	9.325 GHz ± 5MHz		CV_{6210}	9.200 GHz ± 5MHz
	CV 6211	9.500 GHz ± 5MHz		CV_{6211}	9.375 GHz ± 5MHz
	CV 6212	9.600 GHz ± 5MHz		CV6212	9.475 GHz ± 5MHz

f_3 =	CV6209	8.905 GHz ± 5MHz
	CV6210	9.450 GHz ± 5MHz
	CV6211	9.625 GHz ± 5MHz
	CV6212	9.725 GHz ± 5MHZ

K1001 Ref	Test	Test Conditions	Insp Level	Sym-bol	Limits Min	Limits Max	Unit
	GROUP A TESTS						
	V.S.W.R. (1)	Ia = 0, Frequency = f_1	100%	-	0.9	-	-
	Noise Output	Ia = 100mA ± 2mA, Frequency = f_1. Notes 1 and 2.	100%	F	13	13.5	dB
	Anode Voltage	Ia = 100mA ±2mA	100%	Va	34	40	V
	Tube Striking Time	Open circuit voltage = 200V ±5V. Transient Pulse Length = 10μS±0.5μS. Transient Pulse Voltage = 1.4kV ±0.7kV. Note 3.	100%	s Ia	- 80	5 -	Sec. mA
	GROUP B TESTS		Note 4				
	V.S.W.R. (2)	Ia = 0, Frequency = f_2 Note 1.	10%	-	0.85	-	-
	V.S.W.R. (3)	Ia = 0, Frequency = f_3 Note 1.	10%	-	0.85	-	-
	Insertion Loss	Ia = 0, Frequency = f_1 Note 1.	10%	-	-	0.15	dB
	GROUP D Omitted						
	GROUP E TESTS		Q.A.				
	Sequential Tests (i) Visual Examination (ii) Vibration (a) Resonant Search (b) Vibration Functional (c) Vibration Endurance	DEF-133:- Clause 6.1 Clause 8.4 to Figure 6, Curve A.					

TESTS (Cont'd.)

CV6209-10
CV6211-12

K1001 Ref	Test		Test Conditions	Insp. Level	Sym-bol	Limits Min.	Limits Max.	Unit
	GROUP E (Cont'd.)							
	(iii)	Extra Low Temperature	Clause 12.1 Min. temp.= -55°C.					
	(iv)	Dry Heat	Clause 11, Test B.					
	(v)	Low Temperature/ Low Pressure	Clause 12.2, Test C.					
	(vi)	Damp Heat	Clause 11.1.					
	(vii)	Low Temperature/ Low Pressure	Clause 12.2, Test C.					
	(viii)	Damp Heat	Clause 11.1.					
	(ix)	Low Temperature/ Low Pressure	Clause 12.2, Test C.					
	(x)	Damp Heat	Clause 11.1.					
	(xi)	Low Temperature/ Low Pressure	Clause 12.2, Test C.					
	(xii)	Damp Heat	Clause 11.1.					
	(xiii)	Tropical Exposure, 28 Days	Clause 11.2.					
	(xiv)	Salt Corrosion	Clause 14.0.					
	(xv)	Shock or Impact (30g)	Clause 7.3, Test A.					
	(xvi)	Bump	Clause 7, Test A.					
	(xvii)	Visual Examination	Clause 6.1.					

NOTES

1. The free port of the noise generator shall be terminated by a load whose V.S.W.R. value is better than 0.95.
2. The noise output shall be measured using an approved standard noise source connected in an approved circuit.
3. Tube to be tested in an approved circuit as given on page 5, or equivalent.
4. For Group B tests, the lot is acceptable providing the combined number of rejects for all the tests specified does not exceed 1. If the combined number of rejects exceed 1, the lot shall be rejected and 100% inspection imposed.

OUTLINE DRAWING

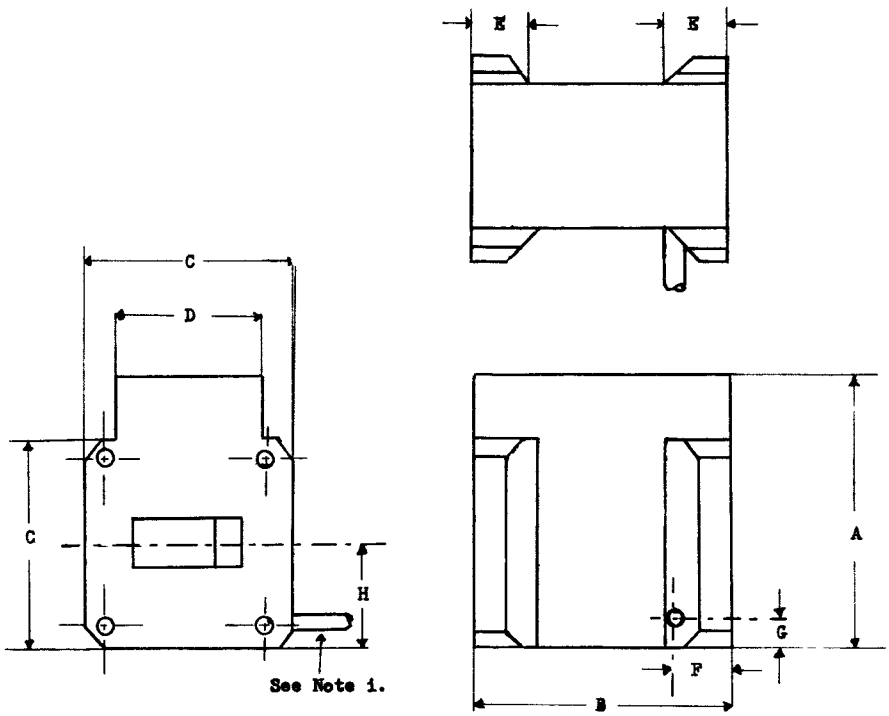

TABLE OF DIMENSIONS		
Symbol	Inches	Millimetre
A	$2\frac{1}{8}$	54.0
B	2	50.8
C	$1\frac{5}{8}$	41.3
D	$1\frac{1}{8}$	28.6
E	$\frac{1}{2}$	12.7
F	$\frac{27}{64}$	10.7
G	$\frac{7}{32}$	5.6
H	0.812	20.6

Original Dimensions in inches.

Tolerances (on inch dimensions):-

Fractional $\pm \frac{1}{64}$

Decimal $\pm$ 0.005

DRAWING NOTES

(i) Silicon rubber lead-out cable 14/.0076 tinned annealed copper core, nominal outside diameter 0.148 x 9 inches minimum length.

(ii) 4 holes (both ends) fitted with 8 - 32 UNC. x 1 diameter wire inserts (tangs broken off). Position of holes and waveguide aperture to WG. 16 square flange to Drg. TR/B 610180, Issue 10.

STRIKE TEST CIRCUIT

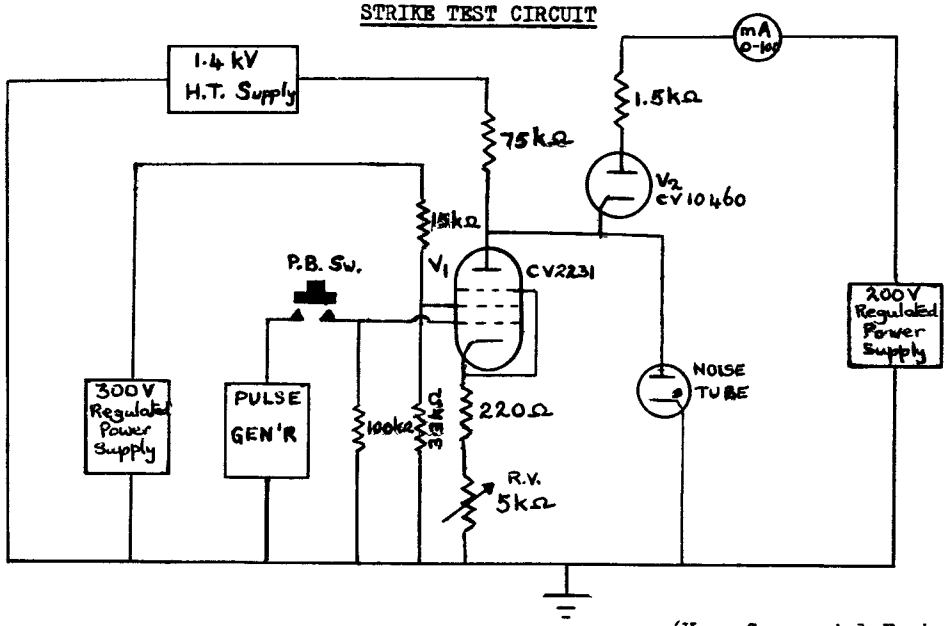

(V_2 - Commercial Equivalent is Mullard PY88.)

CIRCUIT NOTES

(i) The output of the pulse generator should be square negative pulses, of amplitude 75 volts, duration 10μSecs. and p.r.f. 50 p.p.s.. The output impedance should be less than 10kΩ.

(ii) The 1.4kV H.T. supply may be d.c. or 1.4kV peak a.c.. If the latter the pulse generator must be syncronised so that the leading edge of the 10μSec. pulse occurs 5μSec. before the peak value of the a.c..

(iii) The leads from the 75 kΩ resistor to the anode of V_1, the noise tube and cathode of V_2 shall have the minimum possible capacitance to earth to maintain the pulse shape.

(iv) Before a series of tests, without the noise tube connected, all the power supplies shall be applied and R.V. adjusted to give a current of 4 - 5 mA in the milliammeter.

(v) With the noise tube connected, the 1.4kV H.T. supply shall be applied last. The strike time shall be measured from the instant that the push button is pressed.

VALVE ELECTRONIC **CV6234**

Specification Mintech/CV6234 Issue 1, Dated October 1968. To be read in conjunction with K1001.	SECURITY Specification: Unclassified Valve: Unclassified

TYPE OF VALVE: Packaged Magnetron
CATHODE: Unipotential, indirectly heated
PROTOTYPE: VX 8544

MARKING
See K1001/4
Additional marking:-
Serial No.

RATINGS AND CHARACTERISTICS

Not for Inspection Purposes. All limiting values are absolute and non-simultaneous.

			NOTE
Heater voltage	(V)	6.3±7%	D
Heater current at Vh = 6.3V.	(A)	1.6±0.1	
Max. peak anode current.	(mA)	180	
Min. peak anode current.	(mA)	110	
Max. peak input power.	(W)	160	
Max. mean anode input power.	(W)	60	
Max. duty cycle.	(Ratio)	0.5	
Max. pulsed duration.	(µSec)	6	
Max. rate of rise of voltage.	(kV/µSec)	5	C
Max. anode temperature.	(oC)	140	A
Min. tube heating time.	(Secs)	150	B
Nominal operating frequency.	(MHz)	8800	
Nominal pulse voltage.	(V)	800	

CONNECTIONS & DIMENSIONS
See drawing fig. 1
WG 16 Bolted flange (DEF 5352)

MOUNTING SUPPORT
By means of studs in the output flange, see fig. 1

MOUNTING POSITION
Any

WEIGHT
Approximately 1.1 lb.

JOINT SERVICE CAT. NO.
5960-99-037- 5825

PACKAGING
To K1005

NOTES

A. Measured at the point specified on the outline drawing on page 7.

B. The cathode heating time should be greater than 150 seconds for ambient temperatures above 0°C and greater than 180 seconds for ambient temperatures between -55°C and 0°C.

C. For rating purposes only, the rate of rise of pulse voltage, is defined as the steepest tangent to the leading edge of the voltage pulse, measured for voltages which are in excess of 80% of the running voltage of the magnetron.

D. The heater voltage should be reduced when the valve is running, otherwise life may be impaired. The value may be obtained from the table below. For intermediate anode currents obtain the heater voltage by linear interpolation.

Vh, volts rms	Ia, mA mean
6.3 ± 7%	0
5.5 ± 7%	30
4.5 ± 7%	60

TESTS

To be performed in addition to those applicable in K1001, and with particular reference to section 5F. See note 1.

General Test Conditions:- Unless otherwise stated for individual tests, these shall be as given below:- Where tolerances are quoted, the actual value is at the discretion of the manufacturer provided it satisfies the tolerances specified.

Vh	Ia	PRF	Pulse width tp	rrv	Load
6.3 volts See note 2	60 mA mean	100,000 pps	4 µsecs	5 kV/µsecs min See note 4	VSWR = 1.05 max.

Duty factor = 0.4 ± 5%

No.	Test	Test Conditions	LIMITS Min.	LIMITS Max.	Units
1	Dimensions	Valve to be inspected to fig. 1 Valve must pass the gauges defined in figs. 2 and 3.			
2	Soak		48		hrs.
3	Holding period	No voltages	14		days
4	Missing pulses (1)	Ia mean = 72 mA Notes 8, 9.	-	0.25	%
5	Missing pulses (2)	Ia mean = 44 and 72 mA. VSWR = 1.3 min. all phases, note 9.	-	0.25	%
6	Peak anode voltage		750	850	Volts
7	Mean power output		7.5	-	Watts
8	Frequency	t_{anode} = 80° ±5°C. See outline drawing, fig. 1(Drg. Note 4).	8785	8830	MHz
9	Pulling factor	Load VSWR = 1.5 min. (all phases)	-	15	MHz
10	Bandwidth (1)	Ia mean = 44 and 72 mA, VSWR = 1.3 min, all phases, note 3.	-	2.5/tp	MHz
11	Sidelobes (1)	Ia mean = 44 and 72 mA, VSWR = 1.3 min, all phases, note 3.	6	-	db.
12	Heater current	No pulse voltages, Vh = 6.3 volts rms for 2 minutes min.	1.5	1.7	Amps
13	Bandwidth (2) (QA)	Duty cycle 0.2 ± 5% PRF = 50,000 pps, note 3 Ia mean = 30 mA.		2.5/tp	MHz
14	Sidelobes (2) (QA)	Duty cycle 0.2 ± 5% PRF = 50,000 pps, note 3. Ia mean = 30 mA.	6	-	db.

TESTS cont'd.

CV6234

No.	Test	Test Conditions	LIMITS Min.	LIMITS Max.	Units
15	Missing pulses (3)	Duty cycle = 0.2 ± 5% PRF = 50,000 pps, Ia mean = 22 and 36 mA. Note 9		0.25	%
16	Pushing factor	Duty cycle = 0.2 ± 5% PRF = 50,000 p.p.s. Ia mean = 27 to 33 mA. Note 5		2.1	MHz
17	Microphony (S)	With vibration, note 6		± 120	Hz
18	Temperature coefficient (QA)	With anode block temperature. See note 7		-0.25	MHz/°C
19	Shock (QA)	No voltages, hammer angle = 15°		-	-
20	Life (1)	Note 10	500	-	hrs.
21	Life (2) (QA)	Note 12	2000	-	hrs.
22	Shelf life (QA)	No voltages, note 11	3	-	Yrs.
		Post test end points Tests Nos. 19 and 22 Valve must repass all 100% tests.			
		Test Nos. 20 and 21, Valve must repass all 100% tests with the following relaxed limits.			
		Test No. 7 (500 hr. life) Test 20	7		Watts
		Test No. 7 (2000 hr. life) Test 21	6		Watts
		Test No. 8	8770	8830	MHz

NOTES

1. The tests shall be carried out on all valves except those designated sample (S) and Qualification Approval (Q.A.). The tests may be carried out in any order except that tests (2) (3) and (4) must be carried out in that order.

   Any meters used must be Industrial Grade I as laid down in BS 89.

2. The heater starting voltage shall be 6.3 volts rms and be reduced within five seconds of applying E.H.T. For Ia = 30 mA mean, Vh = 5.5 volts rms; for Ia = 60 mA mean, Vh = 4.5 volts rms.

3. To be measured with an RF spectrometer. The main lobe shall be such that the sign of the slope between the 6db levels changes once only.

   The ratio of the maximum power in the main lobe to the maximum power in any of the sidelobes shall be greater than 6 db.

4. K1001 5F 2.5.5 is waived, and instead the manufacturer shall comply with the following:-

   "The rate of rise of pulse voltage, is the value of dV/dt at the onset of RF oscillations and shall not be less than that specified".
   The rrv shall be measured with a suitable differentiator.

5. The pushing factor shall be measured by modulating the mean anode current by ± 10% with a 50 c/s waveform. Alternatively, the mean anode current may be varied rapidly between 27 and 33 mA while the total frequency excursion is noted, care being taken to eliminate errors due to thermal effects.

6. The vibration shall be separately applied in each of three mutually perpendicular directions, one of which shall be perpendicular to the plane of the flange. The vibration shall have accelerations of 2g for 25 c/s to 150 c/s, and $\frac{1}{2}$g for 150 c/s to 2000 c/s. The sampling rate shall be one valve in 50 or one valve per batch whichever is the smaller.

7. To be measured with the anode temperatures controlled at respectively 90°C and 110°C.

8. Immediately following the holding period, test 4 shall be performed. 6.3 volts shall be applied to the heater for 2 minutes maximum, then the EHT shall be applied to give 72 mA mean anode current. The valve shall meet the requirement by the end of the fifth minute of running. After the shelf storage, similar conditions apply except that the valve shall meet the requirement after the 15th minute of running. Running time shall be measured from the moment of application of anode voltage.

9. A missing pulse is defined as an RF pulse which has less than 70% of the average energy of a normal pulse in the band 8720 - 8880 MHz.

10. The scale of life testing shall be related to the production. For production orders of less than 51, one valve shall be life-tested. For production orders of greater than 50, the production shall be divided into batches of 50 and one valve from each shll be life-tested. The batch corresponding to the valve undergoing the life test shall not be released until the life test has completed 80% of the required life. In the event of any valve failing to meet the life test requirements the manufacturer shall consult the Approving Authority.

NOTES cont'd.

11. Three valves shall be stored for 3 years. The valves shall pass all 100% tests after this period and test 4 shall be the first to be performed. Failures shall be reported to the Approving Authority.

12. Three samples shall be subjected to this test. The average of the total aggregate hours shall be 2000 hours per valve for the three valves. No valve contributing less than 1000 hours to the aggregate total shall be accepted as part of the test.

FIG. 1

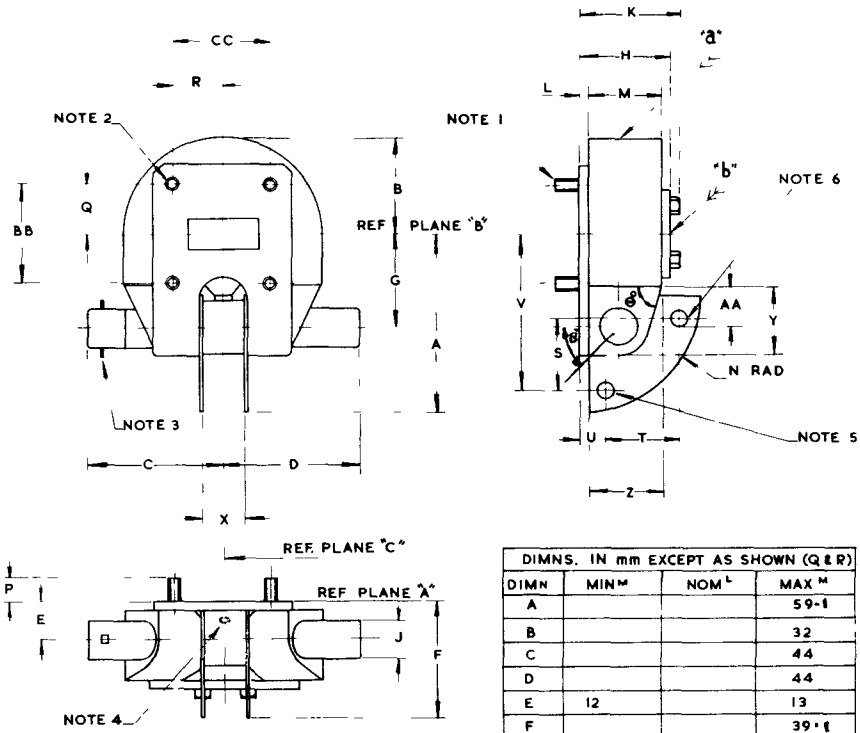

MARKING.

FOR GENERAL MARKING INSTRUCTIONS SEE GWV 5-7-0/202. TYPE MARKING ACCORDING TO PATTERN SE AND POSITIONED WHERE INDICATED BY ARROW "a". DATE AND CODE MARK POSITIONED WHERE INDICATED BY ARROW "b".

NOTES

1. FOUR STUDS No 8 (0·164") 32 UNC.
2. TOLERANCE ZONE DIAMETER 0 004"
3. CATHODE TERMINAL MARKED k
4. ANODE TEMPERATURE MEASURING POINT
5. 4 HOLES W DIA POSITION TOLERANCE 0·2 DIA
6. THICKNESS OF MATERIAL BETWEEN CIRCUMFERENCE OF HOLES AND EDGE OF FIN 1/32" MINIMUM
7. GAUGE 1 TO CHECK STUD LENGTH P, POSITIONS OF STUDS Q, R, BB, CC, AND HEIGHT OF MAGNET GAUGE 2 TO CHECK N, S, T, X, F, U, V

DIMNS. IN mm EXCEPT AS SHOWN (Q & R)			
DIM^N	MIN^M	NOM^L	MAX^M
A			59·1
B			32
C			44
D			44
E	12		13
F			39·1
G	29		33
H	29		30 5
J			13
K	32 0		35·5
L	2 9		3 4
M	23·1		24·7
N			35·7
P	7		8
Q		0 640"	NOTE 7
R		0 610"	NOTE 7
S		22 2 TP	
T		25 4 TP	
U		8 0 TP	
V		51 6 TP	
W	4 9		5 1
X	13·36		13·61
Y	24·3		25 0
Z	23·7		24 4
AA	15·8		16·4
BB		32·51	
CC		30·99	
θ°	70° ± 0·5°		
β°	45° ± 5° (NOTE 4)		

CV6234

FIG. 2

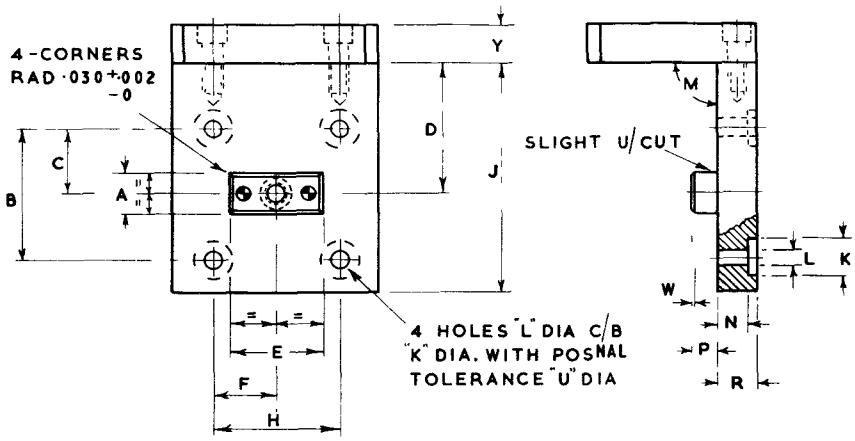

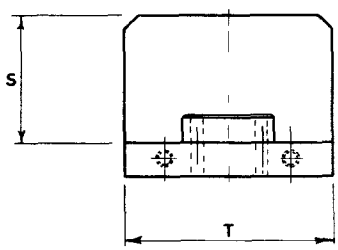

INDEX	INCHES		METRIC	
	MAX	MIN	MAX	MIN
A	0·398	0·397	10·11	10·084
B	1·280	BAS	32·51	BAS
C	0·64	BAS	16·255	BAS
D	1·260	1·256	32·00	31·90
E	0·898	0·897	22·81	22·786
F	0·61	BAS	15·49	BAS
H	1·220	BAS	30·98	BAS
J	2·26	2·24	57·4	56·9
K	0·38	0·36	9·65	9·15
L	0·170	0·1695	4·318	4·305
M	90° ± 5′		—	
N	0·280	0·276	7·1	7·0
P	0·26	0·24	6·6	6·1
R	0·354	0·350	9·0	8·9
S	1·27	1·23	32·25	31·25
T	2·02	1·98	51·3	50·3
U	0·0005	—	0·0127	—
W	0·04	0·03	1·0	0·75
Y	0·38	0·36	9·65	9·15

NOTE.

1. GAUGE TO CHECK STUD LENGTH, POSITION OF STUDS, & HEIGHT OF MAGNET.
2. GAUGING FACES OF RECT. BLOCK TO BE SQUARE & PARELLEL, AND IN CORRECT RELATIONSHIP TO HOLES 'L".

FIG. 3

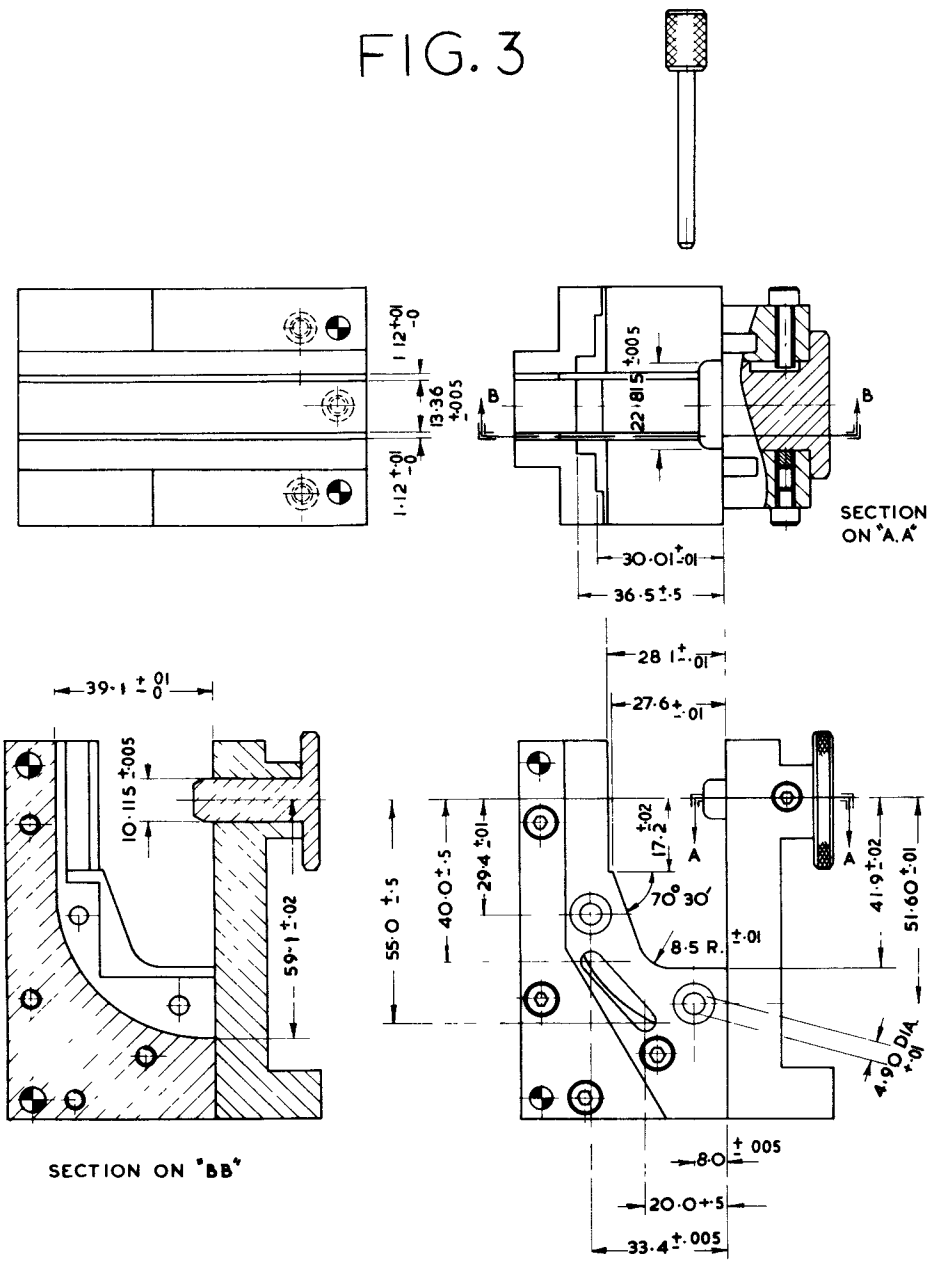
1·12 +·01 -0
13·36 ±·005
1·12 +·01 -0
B
B
22·815 ±·005
SECTION ON "A.A"
30·01 ±·01
36·5 ±·5
28·1 ±·01
27·6 ±·01
39·1 +·01 -0
10·115 ±·005
59·1 ±·02
SECTION ON "BB"
55·0 ±·5
40·0 ±·5
29·4 ±·01
17·2 ±·02
A
A
70° 30'
8·5 R.
±·01
41·9 ±·02
51·60 ±·01
4·90 DIA +·01 -0
8·0 ± 005
20·0 +·5
33·4 ±·005
ALL DIMENSIONS IN mm

J INT SERVICE SPE :FICATION

K1001

ISSUE No 6 JULY 1964

(SUPERSEDING ISSUE No.5 – DATED JUNE 1958)

ELECTRONIC VALVES

ISSUED ON BEHALF OF THE TECHNICAL VALVE COMMITTEE BY:-

MINISTRY OF AVIATION, T.L.5(b)
CASTLEWOOD HOUSE,
77-91, NEW OXFORD STREET,
LONDON. W.C.1.

THE APPROVING AUTHORITIES REFERRED TO IN THIS SPECIFICATION ARE:-

ADMIRALTY

The Captain Superintendent,
Admiralty Surface Weapons Establishment.

The Officer in Charge,
Services Valve Test Laboratories.

GENERAL POST OFFICE

The Engineer in Chief,
General Post Office.

MINISTRY OF AVIATION

The Director of Electronics Production (Air).

The Director,
Royal Aircraft Establishment.

The Director,
Royal Radar Establishment.

The Director,
Signals Research and Development Establishment.

UNITED KINGDOM ATOMIC ENERGY AUTHORITY

The Director,
Atomic Energy Research Establishment.

The Director,
Atomic Weapons Research Establishment.

WAR OFFICE

The Director,
Armament Research and Development Establishment.

AMENDMENT RECORD SHEET

Amdt. No.	Date
1	30-11-64
2.	16th JULY '65
3.	JAN. 1967.
—	—
—	—
6.	21-9-67

Amdt. No.	Date

JOINT SERVICE SPECIFICATION

K1001 ISSUE NO. 6

CONTENTS

Section	Subject
1	Foreword
2	Valve Test Specifications
3	Construction and Materials
4	Marking
5	Acceptance Tests for all Valves
5A	Acceptance Tests for Cathode Ray Tubes
5B	Acceptance Tests for Klystrons
5C	Acceptance Tests for Semiconductor Diodes
5D	Acceptance Tests for Photocells
5E	Acceptance Tests for G.M. Counter Tubes
5F	Acceptance Tests for Megnetrons
5G	Acceptance Tests for Gas Filled Voltage Stabilisers and Reference Tubes
5H	Microwave Gas Discharge Devices
5J	Travelling Wave Tubes
6	Sampling and Statistical Tests
7	Glass Strain Tests
8	Alternative Methods of Test
9	Test Equipment
10	Climatic Tests
11	Vibration, Resonance Search, Fatigue and Shock Tests
12	Base and Cap Adhesion Tests
13	Life Tests
14	Packaging

Contents (continued)

Section	Subject
15	Qualification Approval
16	Holding Period PART 1. MANDATORY PART 2. Delayed Shipment of Inspected Valve. (AA2)
17	Grouped Testing of Structurally Similar Valves
18	Continuous Production and Testing Procedure
19	Radioactive Valves

Appendix I	Valve Dimensions
Appendix II	Abbreviations and Symbols
Appendix III	The Measurement of Inter-Electrode Capacitances
Appendix IV	Valve Bases and Caps
Appendix V	The Measurement of Thermionic Emission
Appendix VI	Life Tests
Appendix VII	Pin and Lead Protectors
Appendix VIII	Electronic Valve Manufacturers' Factory Identification Code
Appendix IX	Reliable Valves
Appendix X	Mechanical Test Apparatus
Appendix XI	Acceptance Sampling
Appendix XII	Measurement of Vibration Noise, Hum, Hiss and Microphony.
Appendix XIII	Measurement of Noise Factor
Appendix XIV	Modulator Design and Rate of Rise of Voltage in Magnetron Testing
Appendix XV	The Quality of Screen and Face of Cathode Ray Tubes
Appendix XVI	Radioactive Materials and Valves, Codes of Practice and Factory Regulations
Appendix XVII	Withdrawal of Qualification Approval as a Requirement for some C.V. Valves.
Appendix XVIII	Measurement of Valve Cathode Interface Resistance
~ x Vex	Inspection procedure for Gold plated pins and Accessories. (AA2)
11 XX	CODE OF PRACTICE RELATING TO JOINT SERVICE RADIOACTIVE

JOINT SERVICE SPECIFICATION K.1001. ISSUE No. 6

ELECTRONIC VALVES

INTRODUCTORY NOTE

Joint Service Specification K1001, Issue No. 6 is essentially a reprint of Issue No.5 including amendments. All additional changes are indicated by vertical sidelines. The layout has been rearranged to facilitate insertion of future amendments.

Section 1. FOREWORD

This specification covers the requirements to be met by electronic valves supplied for the Navy, Army, Air Force, General Post Office and other Authorities. It contains requirements applicable to all valves, further requirements applicable to particular classes of valves, and appendices containing drawings, tables of data, and other information to which references are made in this general specification and in the associated Valve Test Specifications.

Section 2. VALVE TEST SPECIFICATIONS

2.1. Valves used by the British Services are identified by CV numbers, e.g. CV1, CV2. The additional acceptance tests for each CV type of valve are stated in an individual Test Specification which bears the CV number of the valve to which it refers and states where necessary any relevant exceptions or modifications to the requirements of this specification. In case of any conflicting requirements the individual Test Specification shall apply.

2.2. The test figures given in Test Specifications are absolute limits. Allowances shall be made for the inaccuracies of test apparatus and shall be subject to the approval of the Inspection Authority.

2.3. Except when otherwise stated all tests shall be performed by the manufacturer and to the satisfaction of the Inspecting Authority.

2.4. In the case of G.P.O. orders the manufacturer is not specifically required to perform these or other tests but is nevertheless required to ensure that the valves supplied to the G.P.O. are capable of passing all the relevant tests indicated in this specification. Further, notwithstanding any tests performed by the manufacturer, the G.P.O. Inspection Authority may subject any valve supplied by the manufacturer to any of the relevant tests and may determine the acceptability of individual valves or of consignments of valves in accordance with the results of such tests. The G.P.O. Inspection Authority may employ for this purpose sampling conditions other than those described in this specification but (unless otherwise agreed with the manufacturer) they shall not have a lower AQL (see Section 6) than as prescribed in this specification for the tests concerned.

Section 3. CONSTRUCTION AND MATERIALS

3.1. British Standard B.S.448 shall apply to all CV valves as far as it is applicable, but where any B.S. 448 requirement is not in accord with the corresponding requirement of K1001 the latter shall apply.

3.2. The manufacturer may use any form of construction for his valve, which, however, shall be subject to the approval of the Approving Authority (See Section 15, Qualification Approval).

3.3. Where materials, methods, or processes are required by this specification to be "approved" such approval must be obtained in writing from the Approval Authority.

3.4. The workmanship shall be of a high standard throughout and all materials used shall be of good quality and free from defects liable to affect adversely the operation or life of the valve.

3.5. External metal parts, including cans and shells, shall be of approved materials and finish preferably in accordance with Parts VI and VII of Specification DEF 5000. Sprayed metal coating shall be of silver, tin, or other approved material. Electro-tinning shall not be used for flexible leads which are required to be tinned for soldering into circuits.

3.5.1. Where specified in the individual test specification, gold plated pins and accessories shall be tested in accordance with Appendix XIX. (AZL)

3.6. ~~Radioactive valves are defined in Section 19 and are discussed in T.V.C. Information Sheet No. 11, (See also Appendix XVI).~~ RADIOACTIVE UNLESS OTHERWISE SPECIFIED SEE APPENDIX XX.

"[redacted] bases having brass or bronze steel sleeve[redacted] attached shall be tested in accordance with the requirements specified in Appendix IV, paragraph 3.5.

3.8. When operation at high radio frequencies is of importance the Test Specification will state the highest frequency at which the valve shall operate, together with the corresponding ratings, or will describe the special conditions under which the valve will be used.

3.9. In any case of disagreement arising due to differences between gauges the article shall be accepted if it passes any gauge which is made within the tolerances defined in the original system of measures, the gauging procedure being carried out at $20^{0} \pm 5^{0}$C and at a maximum relative humidity of 75%.

3.10. Tolerances on Dimensions. The dimensions shewn on the drawings herein, in B.S.448 and in CV Valve Test Specifications normally include tolerances. Where no limits are specified the following tolerances shall apply for all materials except glass:-

(a) Machined Metal Parts

Up to 1 inch	± 0.005 inch
1 inch to 3 inches	± 0.010 inch
3 inches to 12 inches	± 0.015 inch

(b) Castings

(i)	Machined parts and dimensions between machined surfaces	± 0.01 inch
(ii)	Unmachined parts Thickness	± 1/64 inch
	Linear dimensions Up to 6 inches Above 6 inches	± 1/32 inch ± 1/16 inch
(iii)	Die Castings	± 0.005 inch

(c) Hole Spacings

On true geometrical position	± 0.005 inch

(d) Framework made of Metal Angles, Tees, etc.

Up to 1 foot	± 0.03 inch
1 to 2 feet	± 0.05 inch

(e) Mouldings

(i) Taper on vertical surfaces

Up to 2 inches	± 0.015 inch per inch max.
2 to 3 inches	+ 0.01 inch − per inch max.

On double vertical surfaces such as walls, fins or similar projections, the total taper shall be as above, viz. up to 2 inches the taper on each side of the centre line shall not exceed 0.0075 inch per inch and from 2 to 3 inches it shall not exceed 0.005 inch per inch. These tolerances shall not be additional to any taper included in the design.

(ii) Linear Dimensions ± 0.003 inch

When linear dimensions are affected by taper the tolerances on the base shall be + 0.005 inch and the − 0.000 remainder shall be governed by the taper (i) above.

(iii) Inserts, Gecmetrical position of ± 0.003 inch

Section 4. MARKING

4.1. All marking shall be sufficiently durable to withstand fair usage.

4.1.1. The following symbols shall be shown in a frame in a suitable position on the valve:-

(a) The CV title.
(b) The Broad Arrow (Government Mark)
(c) The Date Code (See 4.1.2.)
(d) The letter K for a Valve made to specification K1001 or K1006, or J for a valve made to the JAN or MIL specification.
(e) The Qualification Approval letter as follows:-
B when Approval has been given by a U.K. Authority.
U when Approval has been given by or on behalf of both U.K. and U.S. Authorities.
D when Approval has been given by the Australian Services.

NOTE:- When approval has been given for the use of a valve in MDAP equipment by the Director of Electronics Research and Development (Air) but that valve has not received Qualification Approval the letter X shall be marked on the valve as if it were the appropriate Qualification Approval letter.

(f) The Factory Identification Code (See Appendix VIII)
(g) Any other marking required by the Test Specification.

Items (d), (e) and (f) shall be arranged in that order with an oblique stroke between (e) and (f).

When a serial number is required by the Test Specification it may be put, if desired, on an internal component provided it is clearly visible.

When the Test Specification calls for a E.I.A. (or RETMA)* or other U.S. type designation to be marked on the valve, and a mineral filled base is used, the letter Y shall be included at the end of the name to indicate the use of a mineral filled base, e.g.

CV509 - 6V6GY

4.1.2. The Date Code shall shew when the marking was put on the valve and shall consist of four digits. The first two being the last two of the year and the second two being the calendar week of the year. When the calendar week consists of a single digit it shall be preceded by a zero

e.g. For Week February 9th to 15th 1964, the code shall read '6407'

Note. Week 1 is defined as the week when January 1st falls on or between Sunday and Friday. When January 1st falls on a Saturday, Week 1 commences on January 2nd.

---

* Electronic Industries' Association (formerly Radio Electronic Television Manufacturers' Association of America).

(Paragraphs 4.1.1. (sub-clauses (a), (c), (d), (e) and (f) and 4.1.2. are requirements in accordance with N.A.T.O. Stanag No. 4012).

4.1.2.1. Alternative Date Code

further Notice (AL1)

Until January ~~1st 1965~~ the following alternative Date Code shall be acceptable at the discretion of the manufacturer.

The Code shall consist of two block letters, the first representing the year beginning at A for 1945 and the second representing the month beginning at A for January, e.g.:-

AA	=	1945 January
AB	=	1945 February
NA	=	1957 January
NF	=	1957 June

The letters I and O shall not be used in the Code

4.1.3. Any marking additional to the above shall be subject to the approval of the Inspection Authority. Any such approved marking which involves periodic changes will not require approval for each individual change.

4.1.4. When it is impracticable, on account of physical limitations, to comply with paragraph 4.1.1. the approval of the Authority concerned should be sought for the omission of some of the symbols and/or frame. The order of preference for retention of the symbols is:-

i	The CV number
ii	The Factory Code
iii	The Date Code
iv	The Broad Arrow
v	The Specification and Qualification Approval letters

4.1.5. W[redacted] Marking for Radioactive Valves

([redacted]tion 49 ~~for definition of a Radioactive Valve~~). See Appendix XX

4[redacted] For British Manufactured Radioactive Valves "Additional to the ger[redacted] marking requirements at 4.1.1 to 4.1.4 above, all Bri[redacted] manufactured radioactive valves shall be marked on [redacted] bulb or envelope in accordance with the requirements spe[redacted]ed in Appendix XX, according to the radioactive class to which the valve is assigned.". [redacted]ring i.e. printed in the imprinting colour in the ordinary sense. ~~(This is opposite to American practice where the imprinting colour is used for a large surround and the cautionary word appears by absence of imprinting ink in the background colour.)~~ AL 1.

(ii) A three-bladed Radioactivity Symbol as illustrated.

(iii) The Chemical Symbol(s) for the Radioactive substance(s) within the valve. As an example, the illustrations show the Chemical Symbol "Co 60" for Cobalt 60.

NOTE: For some years to come, stocks will exist of British made Radioactive Valves bearing the now superseded warning marking of an orange band ¼-inch wide.

4.1.5.2. For American Manufactured Radioactive Valves

Current American practice for Radioactive Warning Marking as in United States Military Specification MIL-M-19590B dated 17th June 1958 will be accepted.

4.1.5.3. For Radioactive Valves other than British or American

Radioactive Warning Marking shall be according to 4.1.5.1. above.

4.2. Valves accepted before Qualification Approval or under Concession

4.2.1. If a valve which has not met some particular electrical requirement is accepted under concession the letters to the left of the oblique stroke shall be replaced or cancelled by a yellow splash unless otherwise stated by the authority giving the concession. A document giving a concession which also states that the specification will be amended is to be treated as an amendment to the specification and the yellow splash requirement will not apply.

4.2.2. If a valve which has failed some physical requirement of the specification is accepted under concession the letters to the left of the oblique stroke shall be replaced or cancelled by a yellow splash when requested by the authority giving the concession.

4.2.3. If deliveries of a valve are required before Qualification Approval has been given, or when it has been withdrawn, the Qualification Approval letter is to be omitted or cancelled with a black, dark or neutral splash or stroke.

4.3. Valves accepted to Commercial Specifications in the absence of a CV Test Specification

Valves which have been allocated CV Numbers, but for which no Joint Service CV Test Specifications exists may be purchased to an agreed Commercial Specification. Such valves shall be marked in accordance with Para. 4.1.1.(a) and 4.1.1.(b).

4.4. Cancelled. See clause 4.1.5.

4.5. [illegible] See Section 5.C. (iv)

4.6. [illegible] Specification K.1005.

4.7. Pin and Lead Protectors. Details of Pin and Lead Protectors where relevant are contained in Appendix ~~VIII.~~ (VII) (Am.1)

SECTION 5. ACCEPTANCE TESTS FOR ALL VALVES
(With certain exceptions stated in Sections 5A to 5F)

5.1. General Inspection. A general inspection of the physical features of the valve shall be made and if it does not conform to the requirements of this specification and of the Valve Test Specification it shall be rejected.

5.2. Insulation Tests. The interelectrode insulation of valves of less than 750V anode rating shall be tested by one of the three methods described in paragraphs 5.2.1, 5.2.2 and 5.2.3. In these tests any metal soleplate or skirt or metal coating connected to a pin shall be regarded as an electrode; the heater shall be connected to the cathode.

5.2.1. Insulation Tests, Method 1

5.2.1.1. The following tests shall be applied with the cathode cold.

5.2.1.2. The insulation resistance between any two electrodes (excluding that between cathode and the adjacent grid in multi-electrode valves) shall exceed 100 megohms when measured at the maximum rated voltage of the valve or 500 volts whichever is the lower.

5.2.1.3. The insulation resistance between cathode and the adjacent grid shall be not less than 60 megohms when measured at not less than 20 volts.

5.2.2. Insulation Tests, Method 2

In this test the cathode (or filament) may be cold or heated at the rated voltage. The electrodes shall be strapped in two groups arranged in so many ways that the leakage path between any pair of electrodes may be tested by the application of a suitable voltage. The test voltage shall be applied through 10 megohms and shall be not less than 250 volts for indirectly heated valves and not less than 100 volts for battery valves.

If the valves are tested hot the leakage current shall not exceed 8 microamperes for indirectly heated valves and 2.5 microamperes for battery valves.

If the valves are tested cold the corresponding limits shall be 5 and 2 microamperes respectively.

5.2.3. Insulation Tests, Method 3

In this test the cathode shall not be heated and the insulation shall be measured between each individual electrode and all the other electrodes connected together. The insulation resistances C-all and G1-all shall each exceed 50 megohms when measured at not less than 200 volts.

5.2.4. Insulation Test Under Vibration

In some cases an insulation test under stated vibration conditions will be given in the Test Specification. This will normally be a Qualification Approval Test.

5.3. Heater-Cathode Leakage. The heater-cathode leakage current in indirectly heated valves wherein the heater is not internally connected to the cathode shall be measured with the rated heater voltage or current applied and with the heater both at negative and positive potentials with respect to the cathode, all other electrodes being unconnected. Notwithstanding the inclusion of any protective resistances the applied voltage shall be adjusted so that a potential of not less than 100 volts is maintained between the cathode and heater of the valve during this test. When the maximum permissible leakage current is not given in the Test specification it shall be 25 microamperes.

5.4. Tests of Characteristics

5.4.1. The valve characteristic tests given in the Test Specification need not be performed in the tabulated order unless required. Valves shall be preheated to obtain steady conditions of readings. The applied voltages shall be measured as follows:-

Cathode	Heating Supply	Voltage measured with respect to:
Indirectly heated	AC or DC	Cathode
Directly heated	DC	Negative filament terminal
	AC	Filament transformer secondary centre tap

5.5. Element and Electrode Connections. When the Test Specification requires that internal parts such as shields, beam plates, suppressor grids etc. be each connected to one or more base pins tests shall be made to ensure that they are properly connected.

5.6. Cancelled.

5.7. External Parts

5.7.1. Contact Potential. Where external metal parts such as sole plates, cans and shells are in contact the potential difference shall not exceed 0.25 volts (See DEF 5000, Part VII, Section 10).

5.7.2. Resistance. The resistance between any part of a sprayed metal coating and the base pin to which it is connected shall not exceed 1 ohm.

5.7.3. Clearance. The clearance between a cap and a sprayed metal coating shall be not less than 4 mm.

5.8. Noise. For the purposes of this specification the term noise shall include:-

(a) Noise Factor
(b) Hum
(c) Hiss
(d) Microphonic Noise
(e) Vibration Noise

When required by the Test Specification, test methods as stated in the following paragraphs, shall be used.

5.8.1. Noise Factor

The Noise Factor of a linear system at a selected input frequency is the ratio of (1) the total noise power per unit bandwidth (at a corresponding output frequency) available at the output terminals to (2) the portion thereof engendered at the input frequency by the input termination, whose noise temperature is standard (290°K) at all frequencies. The Noise Factor shall be measured under the conditions given in the Test Specification using the equipment described in Appendix XIII.

Note 1. The Noise Temperature at a pair of terminals, and at a specific frequency is the temperature of a passive system having an available noise power per unit bandwidth equal to that of the actual terminals.

Note 2. For heterodyne systems there will be, in principle, more than one output frequency corresponding to a single input frequency, and vice versa; for each pair of corresponding frequencies a noise factor is defined.

Note 3. The phrase "available at the output terminals" may be replaced by "delivered by the system into an output termination" without changing the sense of the definition.

5.8.2. Hum. Hum is defined as the mains frequency voltage introduced from the heater system in terms of an equivalent grid voltage. It shall be measured under the conditions given in the Test Specification using the equipment described in Appendix XII.

5.8.3. Hiss. Hiss is defined as all noise within a spectrum approximately 25 c/s to 10,000 c/s in the output referred back to the grid when the valve is operated with a D.C. voltage applied to the heater and the valve is not subjected to mechanical vibration and shock.

5.8.4. Microphonic Noise. Microphonic noise is defined as that noise developed when the valve is subjected to mechanical shock excitation, in terms of an equivalent grid voltage. It shall be measured under the conditions given in the Test Specification using the equipment described in Appendix XII. The valve shall be mounted and excited using the equipment described in Appendix X.

5.8.5. Vibration Noise. Vibration noise is defined as that noise which is generated when the valve is subjected to continuous mechanical vibration, expressed in terms of a r.m.s. noise output voltage. It shall be measured under the conditions given in the Test Specification. Suitable test equipment is described in Appendices X and XII.

5.9. Interelectrode Capacitance. See Appendix III.

5.10. Emission. See Appendix V.

5.11. Operational Tests. Operational tests may be carried out as a Qualification Approval feature by the Service to which the valves are supplied to ensure that they are satisfactory for use in the equipment for which they are required. Contract documents may require the manufacturer to do similar tests, if so, will state the apparatus or information to be supplied by the Approving Authority.

5.12. Lead Fragility Test. The following test shall be applied to subminiature valves and semiconductor devices with flexible leads. It shall also be applied to other valves with flexible leads when stated in the Test Specification. Unless otherwise stated the sampling procedure shall be as given in DEF.131 for an AQL of 6.5% and an Inspection Level 1A. Valves which are mechanically sound but failures on electrical tests may be used for this test.

The valve held vertically shall have a weight of not less than 1 lb. (or 8 ozs for semiconductor devices) freely suspended from each lead in turn. It shall then be inclined slowly so as to bend the lead through 45°, brought back and bent to 45° in the opposite direction and returned to the vertical, all bending being in the same vertical plane. Any damage which may permit the ingress of air or moisture or fracture or breakage of a lead, shall constitute a failure.

Valves subjected to the above test are not to be included in deliveries.

5.13. Test of Perpendicularity of B7G and B9A Valves. The major axis of the bulb of B7G and B9A valves shall not depart from the perpendicular to the sole by more than $3\frac{1}{2}°$. The method of test shall be subject to the approval of the Inspecting Authority.

5.14. Inoperatives. Valves or semiconductor devices which have one or more of the following defects are termed "Inoperatives":

(a) Discontinuity
(b) Short circuit
(c) Air leak
(d) Broken pin or lead
(e) Loose base or cap

5.15. Destructive Tests. The following tests are destructive, and valves used for these tests will not be accepted for delivery:-

(a) Lead Fragility

(b) Glass Base Strain

(c) Life (other than Stability)

(d) Shock

(e) Vibration Fatigue

(f) Capacitance Tests and other tests on Flying Lead Valves which require the leads to be cut for the measurements.

5.16. Heater Supplies. Valves shall be designed to operate at discrete frequencies within the range 50-2500 c/s in addition to operation at 50 c/s or at D.C.

Usually their performances over this range will be checked as a Qualification Approval procedure. Unless otherwise specified the heater supply for acceptance tests shall be A.C. at 50 c/s.

Where additional or alternative supply frequencies are specified they shall be taken from the following list:-

(a) D.C.	(c) 400 c/s	(e) 1600 c/s
(b) 60 c/s	(d) 500 c/s	(f) 2400 c/s

All supply frequencies shall be within 5% of the nominal value. These conditions will also apply to valves having additional elements connected to the heater supply.

5.17. Cathode Interface Resistance. Measurement of Cathode Interface Resistance shall be carried out under the conditions specified in the Test Specification. Suitable test equipment is described in Appendix XVIII.

5A. ACCEPTANCE TESTS FOR CATHODE RAY TUBES

5.A.1. INTRODUCTION

This section refers to all types of Cathode Ray Tube supplied for Service use.

The general requirements, 5.A.3, shall apply to all tubes unless otherwise stated in the individual Test Specification. The test requirements given in sections other than 5.A.3. shall apply only when required by the individual Test Specification.

5.A.2 DEFINITIONS

(1) Cathode Ray Tube - An electron beam tube in which the beam can be focussed to a small cross-section on a surface and varied in position and intensity to produce a pattern either visible or otherwise detectable.

(2) Beam Current - The electron current of the beam arriving at the screen.

(3) Cathode Illumination - Illumination of the screen face of a tube caused by light from the heated cathode.

(4) Cut Off (Grid or Modulator) Voltage - The grid voltage which reduces the value of a dependent variable of the tube to a specified low value.

(5) Deflection - The displacement of the beam or spot on the screen under the action of the deflecting field.

5.1. Deflector plates - The electrodes used to produce the electric field for electric deflection.

5.2. Deflecting Voltage - Voltage applied between the deflector plates to create the deflecting electric field.

5.3. Electrostatic Deflection - Deflecting an electron beam by the action of an electric field.

5.4. Magnetic Deflection - Deflecting an electron beam by the action of a magnetic field.

5.5. Symmetrical Deflection - The application, to a pair of deflector plates, of a voltage such that, at every instant, the voltage between one plate and the final accelerator is numerically equal but opposite in sign to that of the other plate.

5.6. Asymmetrical Deflection - The application to a pair of deflector plates of a voltage such that one of the plates is maintained at a fixed voltage (usually zero) with respect to the final accelerator.

5.7. Deflection Sensitivity (Electrostatic) - The quotient of the spot displacement and the corresponding change in the deflecting voltage (usually expressed in millimetres per volt).

5.8. Deflection Sensitivity (Magnetic) - The quotient of the spot displacement and the corresponding change in deflecting magnetic induction.

5.9. Deflection Defocussing - An enlargement, usually non-uniform, of the deflected spot which becomes progressively greater as the deflection is increased.

(6) Face Plate - The (large) transparent end of the envelope through which the image is viewed or projected.

(7) Flashover - Arcing or discharge caused by voltage breakdown between two or more electrodes.

(8) Focussing - The process of controlling the convergence of the electron beam.

8.1. Electrostatic Focussing - Focussing of an electron beam by the action of an electrostatic electron lens.

8.2. Magnetic Focussing - Focussing of an electron beam by the action of a magnetic electron lens.

8.3. Deflection Defocussing - See 4.9.

(9) Line (Trace) - The path traced by a moving spot.

(10) Metallized Screen - A screen covered on its near side (with respect to the electron gun) with a metallic film, usually aluminium.

(11) Neck, The tubular part of the envelope near the base.

(12) Orthochromatic Candela - The actinic intensity (i.e. as related to the response of a specified photographic film) which, when measured by a combination of a photo-sensitor and colour filter of specified overall spectral response, will result in an electrical signal equal to that produced by light from a tungsten filament source of an intensity of one candela at a colour temperature of $2600 \pm 50^{\circ}K$.

(13) Persistence (Decay) Characteristic - The relation (usually shown by a graph) between the emitted radiant power and the time elapsing after the excitation has been removed.

(14) Raster - A pre-determined pattern of deflection lines which provides substantially uniform coverage of an area of the screen.

(15) Scan (Scanning Voltages) - See Deflection (4). The same definition is applicable.

(16) Screen (Luminescent Screen) - The surface of the tube upon which the visible pattern (usually luminescent) is produced.

(17) Spectral Characteristic (Spectral Response) - The relation (usually shown by a graph) between the wavelength and the emitted radiant power per unit wavelength interval.

(18) Spot - The small area of the screen surface instantaneously affected by the impact of the electron beam.

(19) Spot Displacement - Displacement of the undeflected spot from the geometric centre of the screen face caused by misalignment of the gun, leakage currents or magnetic effects.

(20) Stray or Spurious Emission - Emission from a source other than the cathode surface which causes unwanted or uncontrollable excitation of the screen.

(21) Trapezium Distortion - Variation of the sensitivity of the deflection parallel to one axis (vertical or horizontal) as a function of the deflection parallel to the other axis and having the effect of transforming an image which should be a rectangle into one which is a trapezium.

GENERAL REQUIREMENTS

5.A.3.1. General Inspection

A mechanical inspection of the tube shall be made to the requirements of Section 3 and Appendix XV of this Specification.

5.A.3.2. Loose Particles

5.A.3.2.1. Each tube shall be examined for loose particles. It shall be held with the neck axis at approximately 45° to the vertical with the screen downwards and shall be lightly tapped with the fingers on the maximum diameter. If any loose particles are present they shall be caused to traverse the screen a few times and if free screen material is produced the tube shall be rejected except when the screen is silicate or metallized (See para. 5.A.3.2.2.)

If free screen material is not produced the particles shall be examined for size and material and compared with the photographic standards and associated inspection table in Fig. 5.A/1. Loose particles shall be examined through the neck of the tube if not clearly visible when the tube is held as described above.

A tube shall be rejected if loose particles are present in amount and size in excess of the limiting quantities listed in Fig. 5.A/1 or if more than two of the materials in Groups 1, 2 and 3 be present.

5.A.3.2.2. Silicate or Metallized Screens

In cathode ray tubes with silicate or metallized screens the loose particles shall be observed as in 5.A.3.2.1. and shall be classed and assessed in Group 4 or Group 5 of Fig. 5.A/1 as appropriate.

5.A.3.3. Pre-heating

Prior to testing, cathode ray tubes shall be pre-heated for not less than 60 seconds with not less than the rated heater voltage.

5.A.3.4. Element and Electrode Connections

See Section 5.5.

5.A.3.5. Envelope, Face Plate and Screen Quality

See Appendix XV.

5.A.3.6. External Parts

See Section 5.7.

5.A.3.7. Holding Period

See Section 16.

5.A.3.8. Marking

See Section 4.

5.A.3.9. Tests for Qualification Approval Purposes Only.

Unless otherwise specified the following tests will apply for Qualification Approval purposes only.

5.A.3.9.1. Heater Modulation

No perceptible modulation or deflection of the spot shall be caused by the fields of the heater cathode or associated connections under normal operation.

5.A.3.9.2. Cathode Illumination

The tube shall be enclosed in a light proof container and the specified heater potential applied. After a period of at least 60 seconds, the light output at the face of the tube shall not be more than 0.154 milli-foot lamberts in any area of 2 inches in diameter.

5.A.3.9.3. Effects of Magnetisation

Following the line width measurements specified in 5.A.5.7. and the spot position and displacement measuremesnts specified in 5.A.6.4., the tube shall be de-magnetised. The line width and spot position shall then be re-measured immediately. The change in line width shall not exceed 20 per cent of the line width prior to de-magnetisation. The change in position of the undeflected spot shall not exceed 40 per cent of the specified maximum limit.

The tube shall then be exposed to a magnetic field of 500 gauss ± 10 per cent. The line width and the spot position shall be re-measured and shall be within the specified maximum limits.

For all these tests the tube shall be located in exactly the same position in the tube mount.

5.A.4. ELECTRICAL REQUIREMENTS

5.A.4.1. Insulation Tests

5.A.4.1.1. Insulation Tests Other than Grid Insulation and Heater Cathode Leakage Test

The grid, cathode and heater in indirectly heated tubes, and grid and filament in directly heated tubes shall be regarded as an electrode. A metal sole-plate if present shall be regarded as an electrode.

The insulation resistance shall be measured by one of the following methods with the cathode cold and at a voltage of not less than 250 volts unless otherwise stated in the Test Specification.

Method 1

The insulation resistance shall be measured between each and every two electrodes. The minimum insulation shall be 200 megohms.

Method 2

The insulation resistance shall be measured between each electrode in turn and all other electrodes connected together. Each measurement shall indicate a resistance of not less than $\frac{200}{n-1}$ megohms or greater than 50 megohms, "n" being the number of electrodes.

5.A.4.1.2. Grid Insulation

The test for insulation between grid and all other electrodes shall be done with normal electrode voltages applied and with the heater connected to the cathode. The test shall be performed by an approved method.

A recommended method of measuring grid insulation is as follows:-

Adjust the grid voltage to the value required for cut off. Insert a resistor of not less than the value stated in the Test Specification between the grid terminal and the voltage supply. Readjust the supply voltage to again cut off the beam current. Measure the increase in cut-off voltage.

5.A.4.1.3. Heater Cathode Leakage

The heater cathode leakage shall be measured with the rated heater voltage applied with the heater both at negative and positive potentials with respect to the cathode, all other electrodes being unconnected. A voltage of not less than 125 shall be applied between the heater and the cathode through a limiting resistor of 100,000 ohms.

5.A.4.2. Maximum Voltage Tests - Flashover and Stray Emission

5.A.4.2.1. The heater voltage shall be applied for 2 minutes before application of other potentials. The value of the limiting resistors or the impedance of the power supply shall be as specified. Unless otherwise specified the tube shall be adjusted to optimum focus with the maximum rated voltages on all electrodes (other than any focus electrode) and deflecting fields applied to scan the useful screen area for a period of at least 60 seconds.
There shall be no sign of breakdown.

Cathode ray tubes designed for asymmetrical deflection shall be tested as above with the scanning voltages applied as specified to the deflector plates.

5.A.4.2.2. Stray Emission (a)

With the tube operated as in 5.A.4.2.1. the grid voltage shall be adjusted to cut off and the deflecting fields reduced to zero. No stray emission shall cause visible excitation of the screen during a period of at least 2 minutes following the application of the anode voltage/s, the tube being viewed in darkened conditions.

5.A.4.2.3. Stray Emission (b)

The tube shall be operated as in 5.A.4.2.2. but with the screen uppermost and horizontal. The tube neck shall be tapped using an approved forked, rubber covered, wooden hammer at the specified rate of tapping (uaually 4 per second minimum) for a specified time.

The tube shall be rejected if flashover or stray emission cause visible excitation of the screen after the first five seconds.

5.A.4.3. Measurement of Grid Cut-off Voltage

The grid cut-off voltage shall be measured at the threshold of visibility of an undeflected focussed spot. The light intensity (room illumination) falling on the screen shall be at a low level. Alternatively the voltage shall be measured for a beam current of 0.1 microampere allowance being made for leakage currents.

Whichever method is used the same voltage shall be used in subsequent tests.

5.A.4.4. Grid Drive or Modulation (On Tubes for use at High Beam Currents)

The grid voltage required for a specified value of beam current shall be measured with the spot deflected off the useful screen area, or with the screen over-scanned.

The grid drive or modulation shall be obtained by subtracting the above voltage from the grid cut-off voltage (5.A.4.3.)

The beam current shall increase continuously from cut-off to the specified test condition.

5.A.4.5. Gas Test (Tetrode Tubes)

With no focus, ion trap or deflection fields applied the final anode and cathode currents shall be measured under the following conditions:-

Final Anode Voltage	=	-25V
First Anode Voltage	=	+300V
Heater Voltage	=	specified nominal

The Grid Voltage shall be adjusted for a cathode current of not less than 400 microamperes. The value of the gas ratio shall be computed from the following equation and shall not exceed 2×10^{-4} or a specified limit

$$\text{Gas Ratio} = \frac{\text{Final Anode Current (microamperes)}}{\text{Cathode Current (microamperes)}}$$

5.A.4.6. Inter-Electrode Capacitance

Capacitance measurements between the specified elecrodes shall be made at the tube contacts with the tube cold and by the methods described in Appendix III or other approved methods.

5.A.5. MEASUREMENT OF OPTICAL CHARACTERISTICS

5.A.5.1. Measurement of Light Intensity

5.A.5.1.1. The Light Intensity of a tube shall be measured on an optimum focussed raster of convenient size using a photo-electric device having an overall response approximating to the C.I.E. average eye. The grid voltage or beam current shall be adjusted to produce the specified light intensity. The grid voltage (and/or beam current when specified) shall be measured.

The Light Intensity is related to the average luminance of a raster by the formula:-

$$\text{Intensity} = \frac{\text{Luminance} \times \text{Area}}{\pi}$$

Where Intensity is in Candelas, Luminance in Foot Lamberts and Area in square Feet

5.A.5.1.2. Tests of the intensity of a particular colour emitted by a screen shall be made using a specified colour filter in addition to a C.I.E. average eye correction filter and the filter/photocell combination calibrated against a light source of colour temperature of 2600 ± 50°K.

The procedure of 5.A.5.1.1. shall then apply using the new calibration.

5.A.5.2. The light intensity or the beam current shall increase continuously when the grid voltage is varied from cut-off to the value corresponding to the specified light intensity or working beam current.

5.A.5.3. The specified light intensity or working beam current shall be attained at a grid/ cathode voltage not more positive than -1 volt.

5.A.5.4. Measurement of Actinic Intensity

The actinic intensity of the screen of a cathode ray tube intended for photographic recording shall be tested as in paragraph 5.A.5.1. but using a colour-filtered photocell having an overall response corresponding to that given in Fig. 5.A/2.

The actinic intensity will be specified in the Test Specification in "Orthochromatic Candela" a special unit introduced for the purposes of this test. (See 5.A.2.10)

5.A.5.5. Persistence

The persistence of a screen shall be tested using a defocussed linear raster pattern. Initial luminance and duration of excitation of the pattern will be specified by the Test Specification.

Persistence shall be measured as the time taken for the initial level of luminance to fall to specified values after removal of excitation.

A temperature correction factor shall be applied when specified.

5.A.5.5.1. Measurement of Screen Persistence

A convenient method of measuring the persistence of a Cathode Ray Tube may consist of an integrating photometer in conjunction with an indicating device or recorder.

The tube and photometer should be housed in a light-proof trunk with a distance between them of approximately ten times the radius of the raster being used.

The photometer, which must be corrected to the spectral response of the C.I.E. average eye, can be calibrated for intensity by locating a standard lamp in place of the tube. The axis of the photometer and tube neck will lie in the same plane so that the lamp should be placed at the same location as that for the centre of the tube screen. Once calibrated in this way, raster intensity can be measured.

The raster pattern should be formed by 50 c/s x 10 kc/s scanning voltages, the size being determined by the formula:

$$\text{Intensity} = \frac{\text{Raster Luminance x Raster Area}}{\pi}$$

Where Intensity is in Candelas, Luminance in Foot Lamberts and Area in Square Feet.

The luminance will be specified in the test specification. By the same formula the final luminance can also be calculated.

The raster size should be measured at optimum focus but during the measurement of luminance it should be defocussed sufficiently to diffuse the line structure.

If no other period is specified, the screen must be excited to the specified luminance for at least thirty seconds. This permits the phosphor to build up to a steady state of excitation. On the expiration of this period the tube beam current should be cut-off and the phosphorescence of the screen can be measured. Timing by means of a stop-clock or other suitable device should commence at the instant of cut-off and be continued until the photometer indicates the specified lower luminance.

The ambient temperature close to the tube screen should be recorded during the measurement and if necessary the specified correction factor applied to the recorded time.

If a coloured filter is specified it should be interposed between the tube and photometer after the calibration procedure.

In older specifications where Test Set 331 has been specified as the method used for persistence measurements the following conditions can be applied using the above procedure.

Initial luminance measured through a C2 filter = 1.75 foot Lamberts

Time of Excitation = 30 seconds

Final luminance = 0.55% of initial luminance for N4 filter

or 2.2% of initial luminance for N3 filter.

5.A.5.6. Spectral Characteristic

When it is required to check the spectral characteristic of energy emitted from an excited screen the Test Specification will state the conditions of test.

5.A.5.7. Measurement of Focus

The focus quality shall be determined by a measurement of the width of a line using one of the following methods.

Unless otherwise specified the line width shall be considered as bounded by the region of 1/5th peak luminance as estimated by the eye when viewed through a microscope.

If necessary to prevent screen burning, the grid may be pulsed positively from cut off with pulses of specified duration and repetition rate.

Tubes utilising magnetic focus and/or deflection shall be tested in an approved Focus/Deflection coil unit.

5.A.5.7.1. Electrostatic Deflection

5.A.5.7.1.1. Expanded Raster

A raster formed by 10 kc/s x 50 c/s linear scanning shall be applied about the centre of the screen and the grid voltage adjusted to attain the specified light intensity or beam current.

The length of the high frequency lines will be specified. The low frequency lines shall be expanded to make the line structure clearly visible and to include the specified positions of measurement. The focus shall be adjusted to the optimum at the centre of the raster.

The line width shall be determined (a) at the screen centre and (b) as a measurement of deflection defocussing, at the specified distance along a radius at 45° to the axes of deflection.

This procedure shall then be repeated without adjustment of focus, with the high and low frequency scanning voltages interchanged and the raster size adjusted to give the same line lengths.

Unless otherwise specified symmetrical deflecting voltages shall be used.

5.A.5.7.1.2. Elliptical or Circular Trace

An elliptical or circular trace having major and minor axes of specified lengths and frequency shall be used and the grid voltage adjusted to attain the specified light intensity or beam current.

The tube shall be adjusted to optimum focus and the width of the trace measured at the point of pocrest definition.

5.A.5.7.2. Magnetic Deflection

5.A.5.7.2.1. Expanded Raster

A raster as specified in 5.A.5.7.1.1. shall be applied about the centre of the screen and the grid voltage adjusted to give the specified light intensity or beam current.

The length of the high frequency lines will be specified. The low frequency lines shall be expanded to make the line structure clearly visible and the tube shall be adjusted to optimum focus at the centre of the raster.

The line width shall be measured at the centre of the screen.

The above procedure shall then be repeated without adjustment of focus with the high and low frequency scanning axes interchanged.

5.A.5.7.2.2. Pulsed Line

A 10 Kc/s line of specified length shall be applied and the grid voltage shall be adjusted to a value equivalent to that for the specified light intensity or beam current on a raster. The grid may be pulsed positively from cut off with 100 microsecond pulses at a specified repetition rate to attain the equivalent peak beam current or light intensity conditions.

The tube shall be adjusted to optimum focus and the line width measured at the centre of the trace.

With no further adjustment of focus the scanning axis shall be rotated 90° and a second measurement of line width made at the centre of the trace.

5.A.5.7.3. Unfocussed Spot Diameter

The diameter of the unfocussed spot shall be measured. The grid of the tube shall be pulsed as specified with no deflecting or focussing fields applied.

5.A.6. MEASUREMENT OF DEFLECTION AND SPOT POSITION

5.A.6.1. Deflection Sensitivity

A symmetrical (or asymmetrical if specified) deflection covering 75 per cent of the useful screen diameter shall be applied to each axis successively. The ratio of the deflection in millimetres to the instantaneous deflection voltage shall be measured for each axis.

5.A.6.2. Deflection Distortion

5.A.6.2.1. Trapezium Distortion

With the specified screen area scanned by symmetrical (or asymmetrical if specified) deflection voltages, the angles between adjacent sides of the raster shall be measured, the sides being averaged over their whole length.

5.A.6.2.2. Angle Between Axes

The angle between axes shall be measured counter clockwise from the horizontal trace at the centre of the screen.

5.A.6.3. Useful Screen Area

A raster shall be applied about the centre of the screen to excite not less than the specified minimum useful screen area. The intensity shall be that specified for the light intensity test and the focus shall be adjusted for optimum. The difference in intensity between any two parts of the useful screen area shall not exceed 2 : 1, allowance being made for any non-uniformity of writing speed. Visual estimation will usually satisfy this requirement.

5.A.6.4. Measurement of Spot Position and Displacement

5.A.6.4.1. Spot Position-Electrostatic Deflection

The spot position relative to the geometric centre of the screen shall be measured with all the deflecting plates connected directly to the final anode and any effects of external electrostatic and magnetic fields allowed for or eliminated.

For electrostatically focussed tubes the spot shall be adjusted to optimum focus.

For magnetically focussed tubes no focussing shall be present.

The grid voltage may be adjusted to any convenient value.

5.A.6.4.2. Spot Position-Magnetic Deflection

The spot position relative to the geometric centre of the screen shall be measured without deflecting fields applied and with any effects of external electrostatic or magnetic fields allowed for or eliminated.

For electrostatically focussed tubes the spot shall be adjusted to optimum focus.

For magnetically focussed tubes no focussing field shall be present.

The grid voltage may be adjusted to any convenient value.

5.A.6.5. Spot Displacement (Leakage)

With the spot adjusted to optimum focus and each deflecting plate connected to the final anode through a 10 megohm resistor, the short circuiting of each resistor in turn shall not produce a spot displacement in excess of the specified limit.

5.A.6.6. Spot Displacement (Beam Current Effects)

With the specified plate resistors and the deflector plates connected symmetrically the spot, line or raster shall be examined for shift of position when the grid voltage is changed from cut off to the voltage required for the specified light intensity.

When necessary the grid may be pulsed to prevent damage to the screen by excessive beam current.

5.A.7. MEASUREMENT OF MECHANICAL REQUIREMENTS

5.A.7.1. Alignment Tests

5.A.7.1.1. Mechanical Alignment

Mechanical features, such as those listed below shall be measured or checked by such gauges or dimensions as are specified.

(a) Alignment of side terminal to base reference

(b) Alignment of neck axis to bulb axis

(c) Degree of face tilt to major axis

(d) Neck straightness

(e) Perpendicularity of glass soleplate to neck.

5.A.7.1.2. Side Terminal Alignment

This shall be measured as the angle between a specified trace and a plane passing through the centre of the side terminal and the axis of the tube.

5.A.7.1.3. Base Alignment

This shall be measured as the angle between the trace produced by the specified deflection plates and the plane passing through a specified pin and the axis of the tube.

5.A.7.1.4. Electrostatic Deflection Direction

The spot shall be deflected in the direction of the specified base or other reference points when a positive potential is applied to the Y1 and X1 deflection plate successively.

5.A.7.2. Resistance to External Pressure

The completed tube shall be subjected to an external pressure of 45 lbs per square inch absolute for a period of not less than 60 seconds and not more than 90 seconds. This pressure shall be attained in not less than 20 seconds and not more than 60 seconds.

The appearance of any form of crack or fractire after this test shall constitute a failure. Tubes which are sound mechanically but failures in electrical tests may be used for this purpose.

5.A.8. LIFE TESTS

See Section 13.

5.A.9. SAMPLING INSPECTION

See Section 6.

LOOSE PARTICLES IN CATHODE RAY TUBES.

PARTICLE MATERIAL AND SIZE CLASSIFICATION

GROUP	MATERIAL	LIMIT QUANTITY	SIZE
1	Glass	1 piece	A
2	Ceramic	1 piece	A
3	Metal (assessed on linear dimensions, not on area)	1 piece	A
4	Graphite, Mica or Lead Sulphide	One of each	C
5	Dust (i.e. Any particle of size not greater than 1/5th of A)	25 square mm. max. area.	



This reproduction is for illustration only. Original photographs for the use of Manufacturers and Inspection Authorities may be obtained on application to:-

The T.V.C. Office, Ministry of Aviation,
Castlewood House,
77-91 New Oxford Street,
London, W.C.1.

FIG. 5A/1

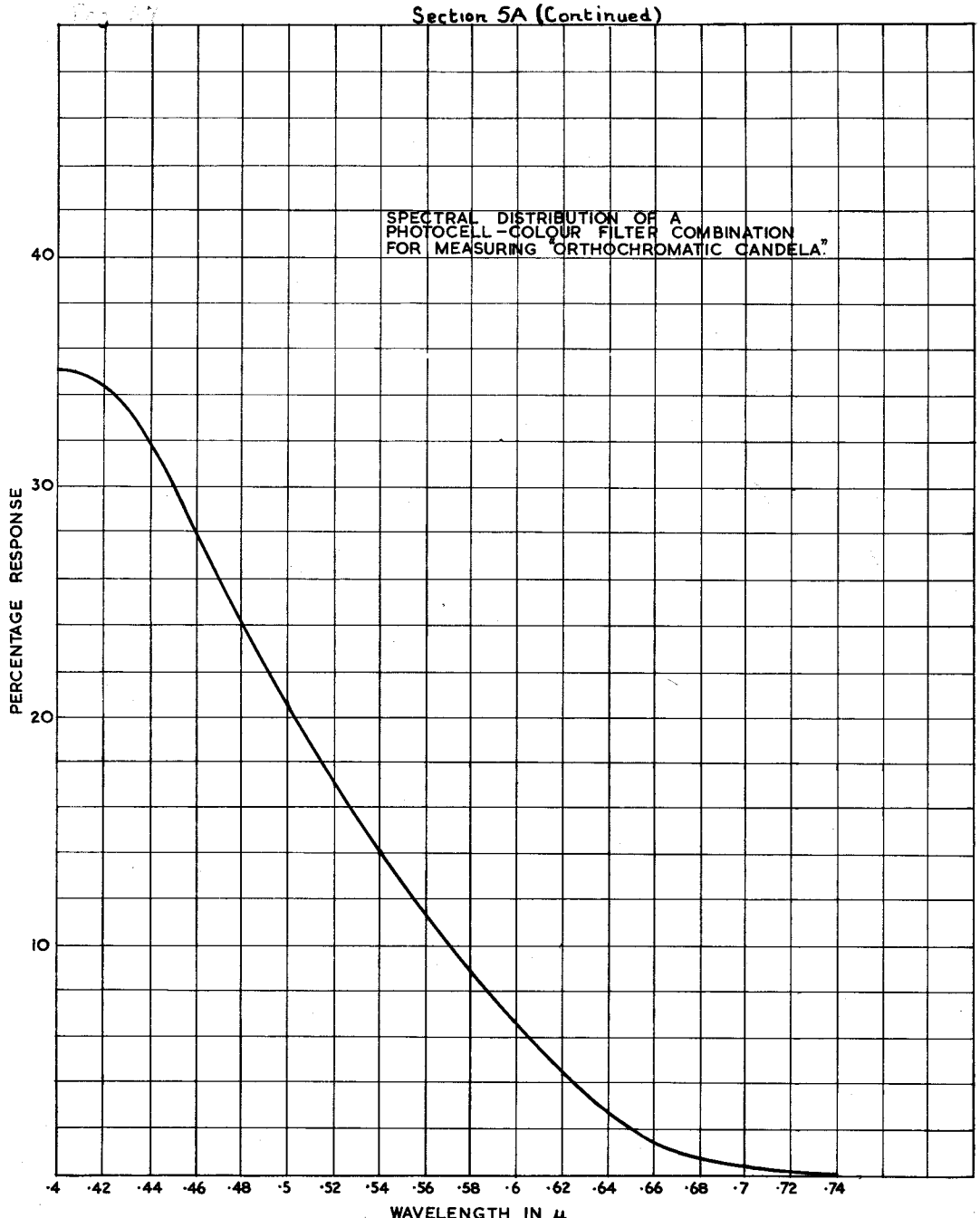
SPECTRAL DISTRIBUTION OF A PHOTOCELL-COLOUR FILTER COMBINATION FOR MEASURING "ORTHOCHROMATIC CANDELA"
PERCENTAGE RESPONSE
40
30
20
10
·4 ·42 ·44 ·46 ·48 ·5 ·52 ·54 ·56 ·58 ·6 ·62 ·64 ·66 ·68 ·7 ·72 ·74
WAVELENGTH IN μ

FIG. 5A/2

SECTION 5B

V.M. VALVES (KLYSTRONS)

INDEX

5.B.1. Definitions

- 5.B.1.1. Warm-up Times
- 5.B.1.2. Optimum Power Output
- 5.B.1.3. Frequency
- 5.B.1.4. Electron Beam Efficiency
- 5.B.1.5. Total Reflector Current
- 5.B.1.6. Noise
- 5.B.1.7. Cold Impedance
- 5.B.1.8. Heater Modulation Effect
- 5.B.1.9. Amplifier Power Gain
- 5.B.1.10. Amplifier Gain Linearity
- 5.B.1.11. Amplifier Stability
- 5.B.1.12. H.T. Voltage
- 5.B.1.13. Pulse Characteristics
- 5.B.1.14. Pulse Repetition Frquency
- 5.B.1.15. Duty Cycle
- 5.B.1.16. Peak Output Power
- 5.B.1.17. R.F.Load

5.B.2. General Test Conditions

- 5.B.2.1. Frequency and wavelength
- 5.B.2.2. Tuning
- 5.B.2.3. Voltages and Currents
- 5.B.2.4. Matched Load
- 5.B.2.5. Measurements of Power
- 5.B.2.6. External Cavities (Plug-in Klystrons)
- 5.B.2.7. Mechanical Tuning Rate and Range Tests

5.B.3. Electrode Voltages and Current Tests

5.B.3.1. Heater

- 5.B.3.1.1. Heater Current
- 5.B.3.1.2. Heater Power
- 5.B.3.1.3. Heater Warm-up time

5.B.3.2. Grid Current

- 5.B.3.2.1. Grid Current (Pulsed Valves)

5.B.3.3. Reflector Current

- 5.B.3.3.1. Total Reflector Current
- 5.B.3.3.2. Reflector Leakage Current
- 5.B.3.3.3. Reflector Gas Current

5.B.3.4. Emission

5.B.4. R.F. Tests

5.B.4.1. Power Output
5.B.4.2. Tuning

5.B.4.2.1. Frequency Tuning Range
5.B.4.2.2. Frequency Tuning Rate
5.B.4.2.3. Mechanical Tuning Range
5.B.4.2.4. Mechanical Tuning Rate
5.B.4.2.5. Mechanical Tuning Hysteresis
5.B.4.2.6. Electronic Tuning Range
5.B.4.2.7. Electronic Tuning Rate
5.B.4.2.8. Electronic Tuning Hysteresis

5.B.4.3. Frequency

5.B.4.3.1. Frequency Drift

5.B.4.3.1.1. Temperature Coefficient

5.B.4.3.2. Frequency Pulling
5.B.4.3.3. Frequency Pushing

5.B.4.4. Noise

5.B.4.4.1. Excess R.F. Noise
5.B.4.4.2. Noise Modulation

5.B.4.5. Heater Modulation Effect
5.B.4.6. Amplifier Power Gain
5.B.4.7. Amplifier Gain Linearity
5.B.4.8. Amplifier Stability.

V.M. VALVES (KLYSTRONS)

This section refers to the requirements to be met by those velocity modulated valves designated "Klystrons" in the Test Specification which are supplied for Service use and whose mean power output does not exceed 10 watts.

The General Test conditions shall apply to all valves but the individual tests contained herein shall only apply when specified in the Test Specifications.

If differences occur between the test figures obtained by the manufacturer and those obtained at the Service Establishments the Approving Authority will provide an agreed correction for the guidance of the Inspecting Authority.

5.B.1. Definitions

5.B.1.1. Warm-up Times

5.B.1.1.1. Heater Warm-up Time is the period between the commencement of the application of heater voltage and the start of application of the H.T. voltage.

5.B.1.1.2. Oscillator Warm-up Time is the period between the start of application of H.T. voltage and the moment at which the operating frequency has reached a steady value within a specified tolerance (Δ f) and/or where the R.F. power output has reached a specified minimum value.

5.B.1.1.3. Total Warm-up Time is the period between the start of application of heater voltage and the moment at which the operating frequency has reached a steady value within a specified tolerance (Δ f) and/or the R.F. power output has reached a specified minimum value.

5.B.1.2. Optimum Power Output is the maximum power output which can be obtained by adjustment when the valve is operating under specified conditions.

5.B.1.3. Frequency

5.B.1.3.1. Frequency of Oscillation is the frequency at which the valve is operating after stability has been reached when looking into a load which shall be matched unless otherwise specified.

5.B.1.3.2. Pulsed Klystron. The frequency of oscillation is that value at which the power output is at the peak value.

5.B.1.3.3. Frequency Tuning Range

5.B.1.3.3.1. Oscillators is that maximum range over which the valve may be tuned with the optimum power output equal to or greater than, the specified minimum value.

5.B.1.3.3.2. Amplifiers - is that range over which the valve operating under specified conditions may be tuned to provide:-

(a) A minimum specified gain when a specified power input is applied.

and/or (b) A minimum specified power output when the power input is adjusted within a specified range for maximum power output at each frequency.

5.B.1.3.4. Frequency Tuning Rate is the rate of change of the Frequency of Oscillation which is obtained when maintaining optimum power output conditions the mechanical tuning control is adjusted as specified. The Tuning Rate is expressed as frequency units per unit change of mechanical tuning control position.

5.B.1.3.5. Mechanical Tuning Range is that continuous frequency range within two frequency points at which the R.F. power output delivered into a matched load is half the optimum power output when the specified operating conditions are changed from the optimum by the adjustment of the mechanical tuning control within the specified limits in either direction from a specified frequency point.

5.B.1.3.6. Mechanical Tuning Rate is the rate of change of the Frequency of Oscillation within the Frequency Tuning Range which is obtained when, under preset optimum operating conditions at a reference frequency, the mechanical tuning control is adjusted as specified. It is expressed as frequency units per unit of mechanical tuning control position.

5.B.1.3.7. Mechanical Tuning Hysteresis is the frequency difference obtained under preset operating conditions when a mechanical tuned frequency setting point is reached when approached from two different directions in a specified manner.

5.B.1.3.8. Electronic Tuning Range is that continuous frequency range within two frequency points at which the power output delivered into a matched load is half the optimum power output when the specified operating conditions are altered from the optimum by adjustment of the electronic tuning control within the specified limits.

5.B.1.3.9. Electronic Tuning Rate is the rate of change of the Frequency of Oscillation which is obtained when, under preset optimum operating conditions at a reference frequency the electronic tuning voltage is adjusted as specified and it is expressed as frequency units per unit voltage change.

5.B.1.3.10. Electronic Tuning Hysteresis is preset when, with the valve operating under specified conditions the power output or operating frequency can have more than one value for the same electronic control voltage. It is expressed as the percentage ratio of the power output at the onset of hysteresis to optimum power output.

5.B.1.3.11. Frequency Drift is the change in oscillation frequency caused by variation in temperature of the body of the valve. The temperature shall be measured at a specified point when the valve is operating under prescribed conditions.

5.B.1.3.11.1. Temperature Coefficient is the quotient of the Frequency Drift divided by its associated temperature variation and is expressed as frequency change per degree Centigrade.

5.B.1.3.12. Warm-up Frequency Drift is the total change in oscillation frequency which occurs in the valve.

(a) During the Oscillator Warm-up Time

or (b) Within a specified time interval after the application of H.T. voltage.

5.B.1.3.13. Frequency Pulling is the difference between the extremes of Frequency of Oscillation which occur when a specified load mismatch is varied through all phases.

5.B.1.3.14. Frequency Pushing

5.B.1.3.14.1. Current Pushing is the change in the frequency of Oscillation which is caused by the variation of electron beam current and is expressed as frequency per unit cathode current.

5.B.1.3.14.2. Voltage Pushing is the change in the Frequency of Oscillation which is caused by variation of the H.T. voltage applied to the valve and it is expressed s frequency units per unit volt change.

5.B.1.4. Electron Beam Efficiency (Multi-Cavity Valve) is the ratio of the electron beam current collected by the collector electrode to the total electron beam current.

5.B.1.5. Total Reflector Current is that current flowing in the reflector circuit which is composed of (a) leakage current, (b) Gas current and (c) Current caused by the electron bombardment of the reflector electrode.

5.B.1.6. Noise

5.B.1.6.1. Excess R.F. Noise is the sum of the R.F. noise powers contributed by the valve in two identical channels equally spaced on either side of the Frequency of Oscillation and spaced from each other by twice a specified I.F. frequency.

5.B.1.6.1.1. Noise Factor is the ratio of the excess R.F. Noise to the thermal noise power in the same two channels at 290°K.

5.B.1.6.2. Noise Modulation is

(a) The amplitude modulated noise over a specified frequency band expressed as sideband noise power relative to the carrier frequency power and given in decibels.

and/or (b) The frequency modulated noise over a specified frequency band and is expressed as the root mean square value of frequency deviation in cycles per second which would provide sideband power equal to the noise power within the same specified frequency band.

5.B.1.7. Cold Impedance (Pulse Operation) is the impedance presented by a valve during the non-oscillating period between pulses to an applied C.W. signal whose frequency is equal to the Frequency of Oscillation.

5.B.1.8. Heater Modulation Effect is the modulation of the R.F. output caused by an a.c. heater supply or to a.c. ripples on a d.c. heater supply.

5.B.1.8.1. Heater Modulation Factor (Oscillators). The Heater Modulation Factor is expressed as

(a) The amplitude modulation depth at (n) cycles per second per ampere of heater ripple current.

and/or (b) The phase modulation index at (n) cycles per second per ampere of heater ripple current.

Where (n) is the frequency of the a.c. ripples or a.c. heater supply.

5.B.1.9. Amplifier Power Gain is the ratio of the R.F. Power out of the amplifier operating under given conditions into a matched load relative to the R.F. power input and is expressed in decibels.

5.B.1.10. Amplifier Gain Linearity is the constancy of the power gain with variation of drive input power when the valve is operating under specified conditions. The deviation of gain from a constant value is expressed in decibels.

5.B.1.11. Amplifier Stability is the ability of the amplifier valve to provide stability of output power within a specified power deviation limit for given operating and drive conditions after a prescribed interruption of H.T. Supply. The change in power output may be expressed as a percentage of power output or given as a change in power output expressed in decibels.

5.B.1.12. H.T. Voltage is that voltage which is applied to the appropriate valve electrode for the purpose of producing the flow of electron beam current.

5.B.1.13. Pulse Characteristics

5.B.1.13.1. Pulse Amplitude. The amplitude of a pulse waveform is the peak value of a curve drawn through the average of the deviations on the top of a pulse. Any spike on the leading edge of duration less than 10% of the pulse length shall be ignored.

5.B.1.13.2. Pulse Voltage. The pulse voltage is the amplitude of the voltage pulse.

5.B.1.13.3. Pulse Current. The pulse current is the amplitude of the current pulse.

5.B.1.13.4. Pulse Length

(a) The pulse length is the time during which the current exceeds 50% of the Pulse Current.

(b) Alternatively, when the Inspection Authority agrees, the pulse length may be defined and determined from the following expression.

$$\text{Pulse Length} = \frac{\text{Im}}{\text{Ip} \times \text{P.R.F.}}$$

where

Im = Indicated mean current

Ip = Pulse current

P.R.F. = Pulse Repetition Frequency

5.B.1.14. Pulse Repetition Frequency is the frequency at which a pulse is applied within a period of one second.

5.B.1.15. Duty Cycle. The Duty Cycle is the product of pulse length and the pulse repetition frequency.

5.B.1.16. Peak Output Power (Pulse Operation)

For the purposes of the tests contained in this section the following definition shall apply:-

$$\text{Peak Output Power} = \frac{\text{Mean Output Power}}{\text{Duty Cycle}}$$

5.B.1.17. R.F. Load is all that part of the circuit which receives R.F. power from and constitute the termination of the specified coupling device, mount, or section.

5.B.1.17.1. R.F. Load Mismatch. The mismatch of the R.F. Load at any frequency is either the voltage reflection co-efficient or the V.S.W.R. (greater than unity) which would occur in a test section consisting of a straight uniform length of transmission line or waveguide, whose cross section has dimensions equal to the nominal dimensions specified for the R.F. load, if it were fed with a C.W. Signal of that frequency from a matched source and terminated by the load.

Where the dimensions of the load waveguide are not specified, the dimensions of the test section shall be equal to the standard waveguide dimensions appropriate to the test frequency. (ref: RCL 351, Table I.)

5.B.2. General Test Conditions

5.B.2.1. Frequency and Wavelength

5.B.2.1.1. If frequencies are converted to wavelength for the convenience of testing, the value

$$C = 2.998 \times 10^{10} \text{ cm/sec.}$$ shall be used

5.B.2.1.2. Specified frequencies within the Frequency Tuning Range shall be within an accuracy of 0.2%. When required the end of the range frequency shall be within 0.2% of the specified value.

5.B.2.2. Tuning. The valve shall be capable of being tuned smoothly and without discontinuity over the specified Frequency Tuning Range.

Unless otherwise stated the frequency range shall be covered using the same oscillatory mode. Where a change in mode is permitted, the change shall not constitute a discontinuity.

5.B.2.3. Voltages and Currents. All specified voltages and currents shall be within the accuracy provided by a B.S. Grade 1 instrument. Applied d.c. values shall not have a superimposed ripple component greater than 0.1% of the specified value.

5.B.2.4. Matched Load. The matched load shall not present a maximum total R.F. loading impedance to the valve which shall give rise to a V.S.W.R. exceeding 1.1:1 at the Frequency of Oscillation.

5.B.2.5. Measurement of Power

5.B.2.5.1. Crystal Rectifiers. An approved method of calibrating the crystal response in terms of relative power levels shall be used when output power is measured by means of the output of a crystal rectifier.

5.B.2.5.2. Thermistors

5.B.2.5.2.1. When output is measured by means of a thermistor the condition of maximum thermistor output shall be used if this condition and that of best thermistor match do not coincide provided that precautions are taken to ensure the valve under test operates into a matched load.

5.B.2.5.2.2. Thermistors for use at wavelengths shorter than 5 cms shall have their output response in terms of relative R.F. power levels checked by an approved method. Appreciable error may be experienced due, for example, to the effect of the thermistor capacity causing a low impedance shunt across the measuring element.

5.B.2.6. External Cavities. (Plug-in Klystrons). All test cavities and assemblies shall be those specified and/or approved by the Approval Authority.

5.B.2.7. Mechanical Tuning Rate and Range Tests. If after setting the reference frequency the end stops limit the travel of the tuner spindle to values less than those specified, measurements shall be made between the limit point of the tuner and that position obtained with the spindle turned by the specified value towards the mid-band position from the limit point.

5.B.3. Electrode Voltage and Current Tests

5.B.3.1. Heater

5.B.3.1.1. Heater Current. The heater current shall be measured when it is substantially stable or following a specified time interval. Unless otherwise stated the H.T. voltage shall be applied.

5.B.3.1.2. Heater Power shall be within 4% of the specified value.

5.B.3.1.3. Heater Warm-up Time. The H.T. voltage shall be applied when the specified time period has elapsed. This time period shall not normally exceed 5 (five) minutes.

5.B.3.2. Grid Current. The total external resistance of the grid circuit shall not exceed 100,000 ohms, except when the maximum current value is 0.5/μA d.c. or less, in which case the resistance may be increased to 1.0 Megohm maximum.

The total grid current shall be measured under specified operating conditions by means of a series current meter after a period of at least five minutes unless otherwise specified. Readings shall be made when current stability has been achieved.

5.B.3.2.1. Grid Current (Pulsed Valves). In valves where the grid is pulsed positive the conditions shall be as in (5.B.3.2.) but the grid current shall be measured immediately after the grid has been biased to cut-off conditions from the steady state conditions specified.

5.B.3.3. Reflector Current

5.B.3.3.1. Total Reflector Current. The total reflector current shall be measured with the specified voltages applied to the valve by one of the following Methods. The specification shall state whether the valve shall be oscillating during this test.

Method I. The reflector current shall be measured using an approved current meter in the reflector circuit.

Method II. The frequency deviation caused by switching a specified high resistance into and out of the reflector circuit shall be observed. The value of reflector current may then be calculated:-

(a) From the reflector voltage change required to return the operating frequency to its original value.

or (b) From the frequency/reflector voltage characteristic if available.

5.B.3.3.2. Reflector Leakage Current. At the conclusion of the Total Reflector Current test (5.B.3.3.1.) the cathode connection shall be opened, or the resonator current reduced to zero by means of grid bias. The reflector current shall then be measured and considered as Leakage current.

5.B.3.3.3. Reflector Gas Current. The value of Current determined in the Reflector Leakage Current test (5.B.3.3.2.) shall be subtracted from the value of Total Reflector Current measured under non-oscillatory conditions. This difference shall be considered as the reflector gas current.

5.B.3.4. Emission. The valve shall not oscillate unless otherwise specified. When required to oscillate the valve shall operate at the refer nce frequency under optimum power output conditions, and under thermal equilibrium at the specified heater voltage. When steady state conditions are obtained the heater voltage shall then be increased or lowered as specified and after a period of at least 2 minutes, or as specified, the resonator current shall again be measured. The change in current shall be expressed as a percentage ratio taken against the value of current obtained with the lower heater voltage.

5.B.4. R.F. Tests

5.B.4.1. Power Output. The valve shall oscillate at the reference frequency and the tuning controls shall then be adjusted within the specified limits to provide optimum R.F. power into a matched load. The power output shall then be measured.

5.B.4.2. Tuning

See 5.B.2.2. and 5.B.2.7.

5.B.4.2.1. Frequency Tuning Range. The valve shall be adjusted to operate under optimum power output conditions when coupled to a matched load. Maintaining optimum power output conditions the valve shall be tuned within the specified limits and the frequency range measured.

5.B.4.2.2. Frequency Tuning Rate. The valve shall be adjusted to operate at the reference frequency under optimum power output conditions when coupled to a matched load. The mechanical tuning control shall be adjusted in either direction as specified, (5.B.2.7.) and the electronic tuning control adjusted to obtain optimum power output. The frequency shall then be measured and the Tuning Rate determined.

5.B.4.2.3. Mechanical Tuning Range. The valve shall be adjusted to operate at the reference frequency under optimum power output conditions when coupled into a matched load. The mechanical tuning control shall then be adjusted above and below the reference frequency setting point, in the specified manner, and the Mechanical Tuning Range measured.

5.B.4.2.4. Mechanical Tuning Rate. The test shall be performed as given in the Mechanical Tuning Range test (5.B.4.2.3.) and the Tuning Rate obtained.

5.B.4.2.5. Mechanical Tuning Hystereses. The valve shall operate at the reference frequency under optimum power output conditions when coupled to a matched load. The mechanical tuning shall be cycled over the complete frequency-tuning range three times, then returned to the original frequency setting point, and the frequency measured. The tuning spindle shall then continue to be tuned in the same direction to the end of the range and again returned to the original frequency setting point when a second measurement of frequency shall be made. The Mechanical Tuning Hysteresis may then be calculated.

5.B.4.2.6. Electronic Tuning Range. The valve shall operate at the specified frequency under optimum power output conditions when coupled to a matched load. The electronic tuning voltage shall then be varied above and below the value giving maximum power output to that value giving half the maximum Power obtained in this test. The frequencies at which the half power points are obtained shall be measured.

5.B.4.2.7. Electronic Tuning Rate. Since the electronic tuning rate is not constant over the electronic tuning range this measurement shall be made by a dynamic method or any approved alternative. In order to obtain an accurate measurement it is required that the change in electronic tuning control shall be small.

5.B.4.2.8. Electronic Tuning Hysteresis. The valve shall operate at the reference frequency under optimum power output conditions when coupled to a matched load. In addition to the direct voltage required for the specified mode of operation, a sweep voltage at 50 cycles, or some other approved frequency shall be applied between the controlling electrode and the cathode. The amplitude of the sweep voltage shall be sufficient to suppress oscillations in the valve on both positive and negative sweep voltage peaks. The power output of the valve shall be examined as a function of the sweep voltage in an approved manner. Observations for Electronic Tuning Hysteresis shall be made.

ALTERNATIVELY the d.c. controlling voltage may be manually operated to provide the sweep voltage in lieu of the applied a.c. voltage.

5.B.4.3. Frequency

5.B.4.3.1. Frequency Drift. The valve shall operate under optimum power output conditions at the reference frequency. The body temperatures shall be varied in an approved manner.

5.B.4.3.1.1. Temperature Coefficient shall be determined from the frequency/temperature characteristic obtained in the Frequency Drift test (5.B.4.3.1.).

5.B.4.3.2. Frequency Pulling. The valve shall operate under optimum power output conditions when coupled into the specified load mismatch. The Frequency Pulling value shall be determined by observation of the extremes of frequency obtained during the variation of mismatch through all phases.

5.B.4.3.3. Frequency Pushing. The valve shall operate under optimum power output conditions when coupled into a matched load. Variation of H.T. electrode supply as specified shall be effected in an approved manner and the Frequency Pushing value obtained.

5.B.4.4. Noise

5.B.4.4.1. Excess R.F. Noise. The valve shall be connected to a circuit as shown in Fig. 5.B.1. or its approved equivalent. Waveguide components used in the test valve circuit shall have negligible variation in their electrical parameters over a minimum frequency band of twice the specified IF amplifier bandwidth centred at the reference frequency to ensure constant loading of the valve over this range. The high Q cavity shall be required to suppress the relevant noise sidebands without attenuating the required output signal. The noise source to be of an approved type and shall be specified.

The local oscillator valve shall be adjusted to operate at the reference frequency under optimum power output conditions. The power into the receiver crystal shall be adjusted to the specified level as indicated by the crystal rectified current.

The noise power indicated on the output shall be noted. The specified noise generator shall then be switched on and the resulting increase in indicated noise output shall be adjusted to an arbitary level (say twice the noted receiver noise level) by means of the calibrated attenuator. The attenuator and meter readings shall be noted. The local oscillator valve shall then be switched off and the valve under test tuned in the specified mode to the reference frequency under optimum output power conditions. The power into the receiver crystal shall be adjusted to the same specified level as supplied originally by the local oscillator. The indicated noise level shall be returned to the value obtained using the local oscillator value by adjustment of the calibrated attenuator and the noise factor of the test valve determined.

Alternatively, the noise figure may be obtained using an accurately calibrated square law output meter.

By employing a R.F. phase bridge to enable an effective filter to be inserted or removed, the separate local oscillator may be dispensed with. The circuit is shown in Fig. 5.B.1(a).

5.B.4.4.2. Noise Modulation. The valve shall operate under the specified operating conditions and the output coupled into an appro ed noise measuring equipment. Recordings of amplitude modulated noise and/or frequency modulated noise against frequency shall be made within the specified bandwidth centred at the specified frequencies or within the specified frequency range off the carrier frequency. The noise modulation values obtained shall be expressed as defined.

5.B.4.5. Heater Modulation Effect. This effect is of importance in an oscillator type valve from the frequency stability point of view, whereas in an amplified type valve the significant effect may be one of amplitude and/or phase modulation.

The valve shall be coupled to a transmission system terminated by a matched mixer crystal coupled to a specified I.F. amplifier. The amplifier output shall be applied to a calibrated discriminator followed by a narrow band a.c. amplifier tuned to the required ripple frequency.

The valve shall be adjusted to operate at the reference frequency under optimum power output conditions within the specified test conditions. The control electrode voltages shall be supplied from an approved d.c. source having no significant ripple voltage superimposed. The heaters shall be d.c. heated and a known amount of a.c. ripple shall be superimposed at the specified frequency (n) cps. The amplitude of the a.c. amplifier output shall be measured, converted into terms of frequency deviation and expressed as R.M.S. frequency deviation at (n) cps. ($\sqrt{\Sigma\Delta f_o^2}$ cps) per ampere of heater ripple current where f_o is the instantaneous frequency deviation.

Where the frequency deviation is small and may possibly be obscured by random effects it will be necessary to use a transmission line bridge system as shown in (Fig. 5.B.2.) or its approved equivalent. The bridge output and a reference signal shall each be applied to similar high gain linear amplifiers. After amplification the two signals shall be applied to a sign detector circuit and the output measured.

5.B.4.6. Amplifier Power Gain. The valve shall be connected to a transmission system which is coupled to an approved power measuring device and terminated by a matched load. The valve shall operate, within the specified limits, with the input drive and the output power adjusted for optimum conditions, at approved test frequencies within the specified frequency band. The relative input and output powers shall be measured at each test frequency and the input power/frequency and output power/frequency characteristics over the tuning range obtained.

There shall be no discontinuity of operation of the valve over the specified tuning range.

It is essential that all R.F. components are of adequate bandwidth, or to have been accurately calibrated, to ensure accuracy of measurement over the specified frequency band.

5.B.4.7. Amplifier Gain Linearity. The valve shall operate with optimum drive power at the reference frequency under optimum power output conditions when coupled to a matched load. The drive power shall be varied from the optimum value by the specified amount, and the output power from the valve under test measured.

5.B.4.8. Amplifier Stability. The valve shall operate with optimum drive input at the reference frequency under optimum power output conditions when coupled into a matched load. The output power shall be measured. The H.T. supply to the valve under test shall then be switched off. After a specified period of at least one minute the H.T. shall again be applied. The output shall then be monitored and the maximum power deviation recorded during the specified time interval.

5.B.5. Low Temperature (Operating).

Where tests are to be performed at a reduced temperature, the conditions specified in Section 10.4 shall apply.

5.B.5.1. During Qualification Approval testing, the valves shall, with the exception of any frequency tests, pass the primary and secondary electrical tests specified in the detail test specification.

5.B.5.2. During Production Acceptance testing, the valves shall pass certain primary electrical tests specified in the detail test specification.

5.B.5.3. Change in Output Power and Frequency During Temperature Rise

The output power and frequency shall be measured at specified times after the simultaneous application of all supplies. The maximum change in frequency and output power shall not exceed the limits specified in the detail test specification. The heat sink, cooling conditions and the impedance of the heater supply shall be specified.

5.B.6. High Temperature (Operating)

Where tests are required to be performed at a temperature of 150°C, the conditions specified in Section 10.5 shall apply.

5.B.6.1. During Qualification Approval testing, the valves shall, with the exception of any frequency tests, pass the primary and secondary electrical tests specified in the detail test specification.

5.B.6.2. During Production Acceptance testing, the valves shall, with the exception of any frequency tests, pass the primary electrical tests specified in the detail test specification.

5.B.7. Torque (Tuning Shaft) (Normally performed during Q.A. testing only).

Measurement of minimum and maximum starting torques shall be made with the valve either operating or non-operating as specified and at both the specified high and low temperatures. A suitable method of performing this test is to observe the positions of the maximum and minimum torques while the shaft is being rotated. The shaft shall then be set to these positions and the starting torques measured.

5.B.8. Operation Life. (Normally performed during Q.A. testing only).

Where an operation life test at high temperature is required, the conditions specified in Appendix VI/6.2 shall apply. On completion of the test the valve shall pass the high temperature test end points specified in the detail test specification.

5.B.9. High and Low Temperature Life (Non-Operating)

(Normally performed during Q.A. testing only).

5.B.9.1. Low Temperature

Where a test for low temperature storage is required the conditions specified in Appendix VI/6.1 shall apply. On completion of the test the valve shall pass the primary electrical tests specified in the detail test specification.

5.B.9.2. High Temperature

Where a test for high temperature storage is required, the conditions specified in Appendix VI/6.2 shall apply. On completion of the test the valve shall pass the primary electrical tests specified in the detail test specification.

5.B.10. Temperature Cycling

5.B.10.1. Temperature Cycling (1)

Where a temperature cycling test is required to be performed, the conditions specified in Section 10.6 shall apply. The valve shall be non-operating. On completion of the test the valve shall pass the primary electrical tests specified in the detail test specification.

5.B.10.2. Temperature Cycling (2). (Normally performed during Q.A. testing only).

The valve supplies shall be switched on simultaneously at normal ambient temperature, and the valve allowed to reach 100°C. The supplies shall then be switched off and the valve allowed to cool naturally to its original temperature. The valve shall be subjected to five of these cycles. The frequency shall be measured at the commencement of each cycle while the body reference temperature still corresponds to the initial temperature.

5.B.11. Air Pressure Tests (Normally performed during Q.A. testing only).

5.B.11.1. Low Pressure

Where a low pressure test is required, the conditions specified in Section 10.8.1 shall apply. The valves shall operate satisfactorily and there shall be no evidence of corona, voltage breakdown or over-heating. The frequency change (Δ f) caused by the change in pressure shall be measured. When specified the waveguide shall be pressurized.

5.B.11.2. High Pressure

Where a high pressure test is required, the conditions specified in Section 10.8.2. shall apply. On completion of the test the valve shall pass certain primary electrical tests specified in the detail test specification.

5.B.12. Moisture Resistance. (Normally performed during Q.A. testing only)

Where a test for moisture resistance is required, the conditions specified in Section 10.7 shall apply. On completion of the test the valve shall pass the primary electrical tests specified in the detail specification.

5.B.13. Heater Resonance and Fatigue

Where a test for heater resonance and fatigue is required, the conditions specified in Section 11.6 shall apply. On completion of the test the valve shall pass the specified life test end points.

5.B.14. Functional Vibration

Where a functional vibration test is required, the conditions specified in Section 11.7 shall apply.

During the test, the changes in, frequency, (either frequency shift or frequency modulation), output power and reflector current, shall be monitored.

Method A. shall be used during Qualification Approval testing.

Method B. shall be used during Production Acceptance testing.

5.B.15. Vibration Life

Where a vibration life test is required, the conditions specified in Section 11.8 shall apply. During this test the changes in, frequency (either frequency shift or frequency modulation), output power and reflector current shall be monitored.

5.B.16. Fatigue Vibration

Where a vibration fatigue test is required, the conditions specified in Section 11.9 shall apply. On completion of the test, the valve shall pass the primary electrical tests specified in the detail test specification.

5.B.17. Functional Shock.

Where a shock test is required, the conditions specified in Section 11.10 shall apply. Frequency deviation and change in output power shall be measured immediately after completion of the test.

Method A. shall be used during Qualification Approval testing.

Method B. shall be used during Production Acceptance testing.

5.B.18. Tuner Side-thrust Test

A specified side thrust shall be applied to the top of the tuning shaft along each of two mutually perpendicular axes both of which are perpendicular to the shaft axis. The frequency deviation shall be measured.

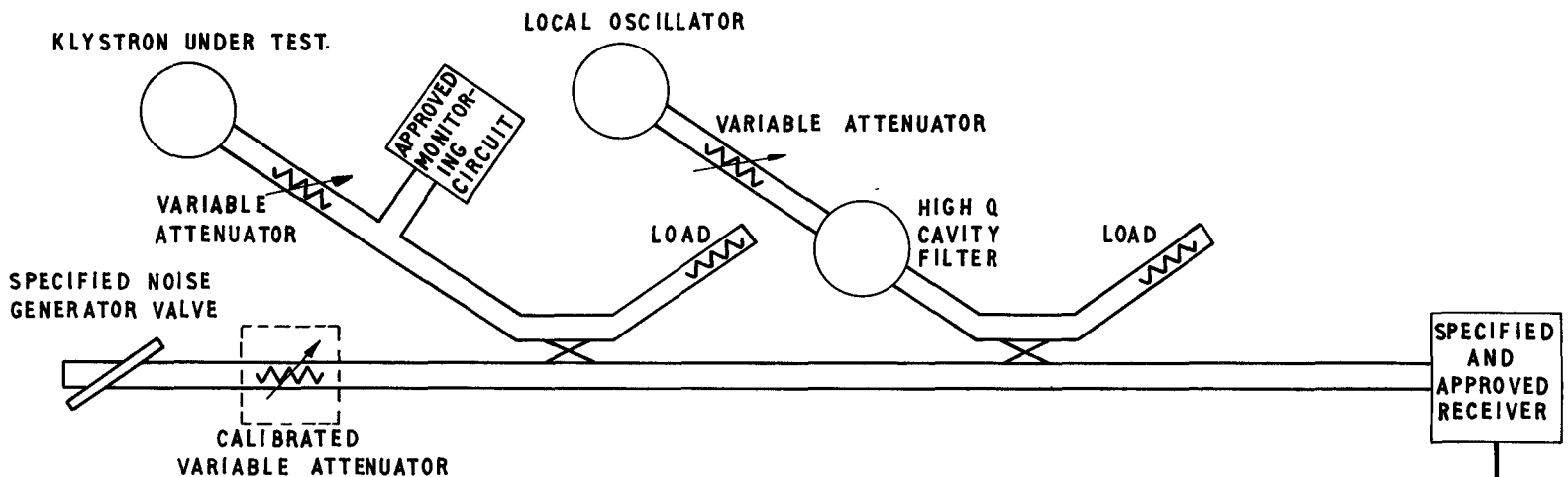

NOTES :- R.F. COMPONENTS SHOULD HAVE ADEQUATE BANDWIDTH (2 x INTERMEDIATE FREQUENCY) OR HAVE CALIBRATION OF FREQUENCY CHARACTERISTIC.

HIGH Q CAVITY SUFFICIENT TO SUPPRESS RELEVANT NOISE SIDEBANDS WITHOUT ATTENUATING SIGNAL FREQUENCY.

IF APPROVED FOR LOW NOISE MEASUREMENTS INTRODUCTION OF FILTER TO AFFECT INCREASE IN NOISE TO SIGNAL RATIO MAY BE PERMITTED.

EXCESS NOISE MEASUREMENT.

Section 5B (Continued)

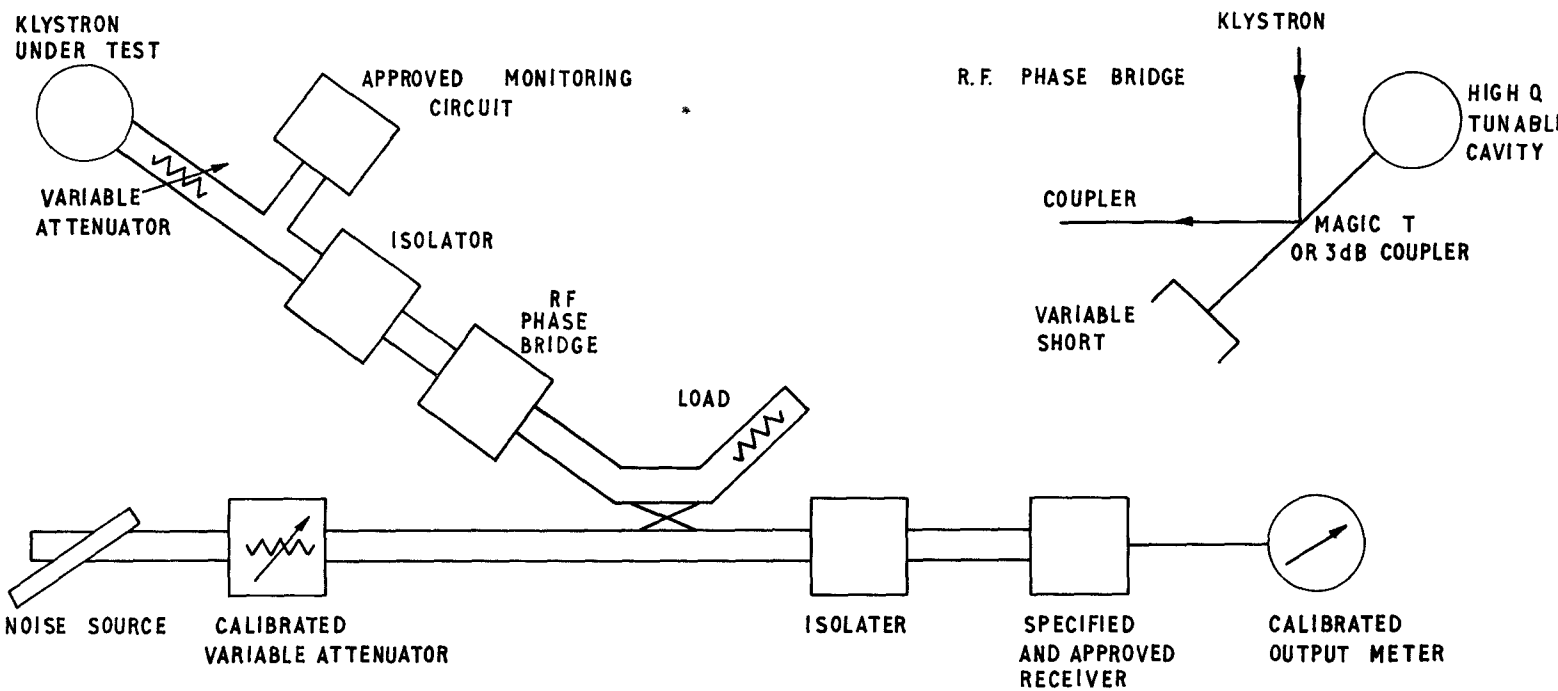

OPERATION

FILTER IN - SET VARIABLE SHORT FOR MINIMUM TRANSMISSION AND THEN TUNE CAVITY FOR MAXIMUM TRANSMISSION

FILTER OUT - DETUNE CAVITY AND ADJUST VARIABLE SHORT FOR MAXIMUM TRANSMISSION

NOTE:-

FOR OPTIMUM FILTER ACTION MATCH CAVITY TO WAVEGUIDE AT SIGNAL FREQUENCY

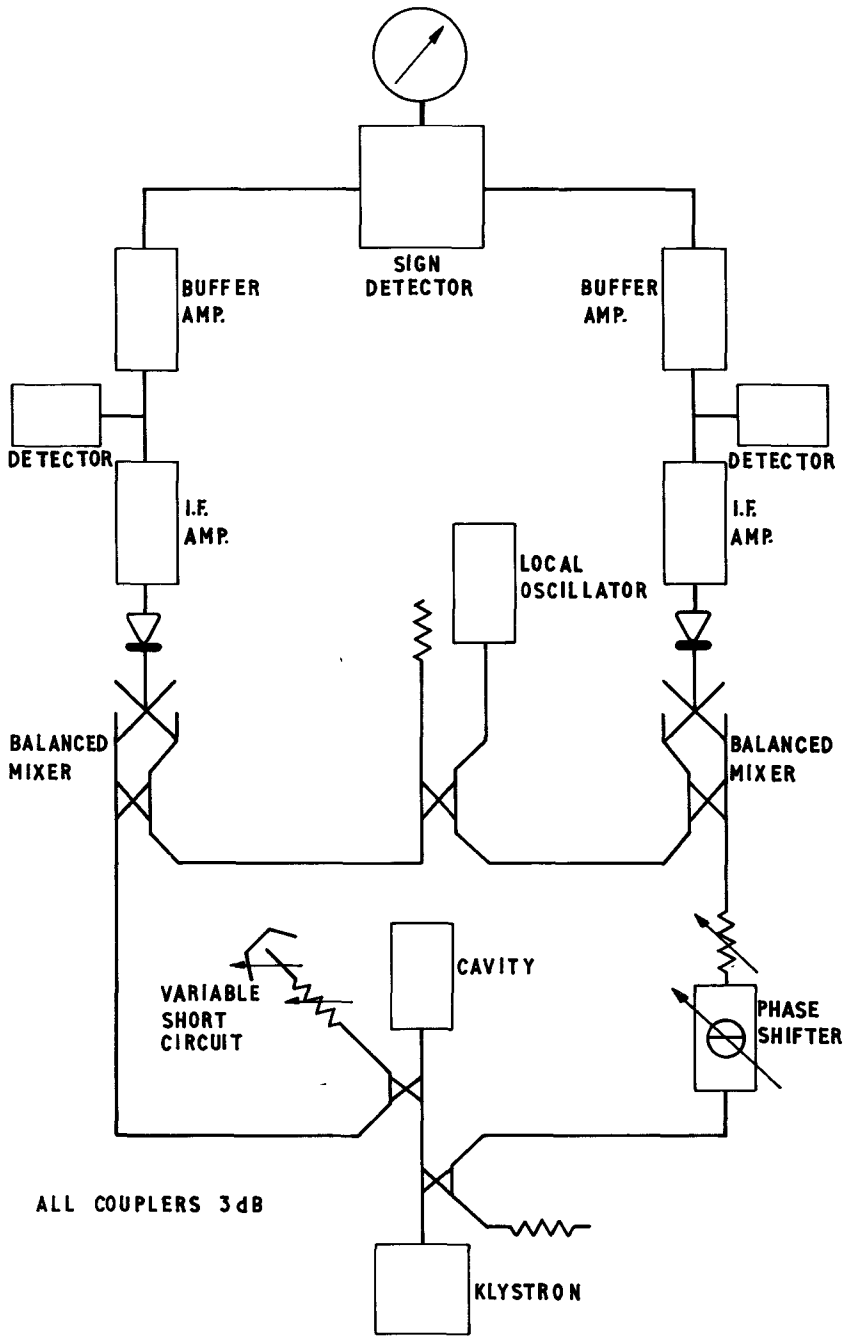

SCHEMATIC DIAGRAM FOR SENSITIVE
FREQUENCY MODULATION MEASUREMENTS.

(222327)

Section 5C

ACCEPTANCE TESTS FOR SEMICONDUCTOR DIODES

5.C.1 Unless otherwise stated in the Test Specification, Semi-Conductor Diodes shall comply with all Sections of this specification except sections 5.2 to 5.10 inclusive, 5.13, 5A, 5B, 5D, 5E, 5F, 7, 12 and 13.

In addition, the following tests may be required and when specified they shall be applied on a Sampling Inspection basis in accordance with the procedure given in Appendix X1 Section 1 "Sampling Inspection by Attributes".

5.C.2 MECHANICAL TESTS

5.C.2.1 Fatigue Test. This test shall be applied in accordance with Section 11.3 except that the force shall be in two directions mutually at right angles. One of the directions shall be along the axis of the diode. For diodes having both connecting leads at one end, one of the directions shall be at right angles to the plane through the leads.

5.C.2.2 Shock Test. This test shall be applied in accordance with Section 11.4 except that the directions of shock shall be:-

(a) in the plane through the connecting leads.
(b) at right angles to the plane through the connecting leads.

For diodes having both connecting leads at one end the shock shall also be applied in the third mutually perpendicular plane both towards and away from the base.

5.C.3 TEMPERATURE CYCLING TEST. The diodes shall be subjected to the specified number of complete cycles of temperature change. The specified extremes of temperature shall be maintained for at least 15 minutes. The time of changing from one temperature extreme to the other shall be not less than 15 minutes nor exceed 30 minutes. The test may start at any point in the cycle.

5.C.4 CLIMATIC CYCLING. This test shall comply with Section 10.1 except that the duration of the test shall be as given in the Test Specification. The Test Specification will also state the electrical tests to be applied during or after the Climatic treatment.

5.C.5 LIFE TESTS. When required by the Test Specification these shall be applied in accordance with the relevant sections of Appendix V1 and with the following additional requirements.

5.C.5.1 Storage Life Test. The diodes shall be stored under the temperature conditions and for the duration stated in the Test Specification. The Test Specification will also state the electrical tests to be applied after the Storage Life Tests.

5.C.6 PEAK INVERSE VOLTAGE TEST. Diodes shall be tested in a circuit equivalent to that shown below.

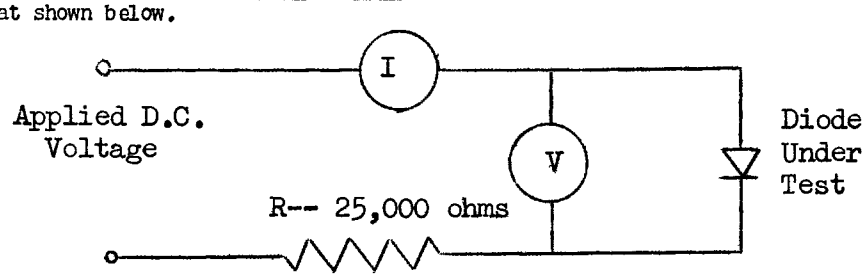

The applied voltage shall be adjusted until a condition is reached at which a further increase in the applied voltage shows no further increase in voltage across the diode. The voltage across the diode at which this condition occurs shall be considered to be the peak inverse voltage.

5.C.7 ADDITIONAL REQUIREMENTS FOR MIXER AND DETECTOR DIODES.

5.C.7.1 Marking. To avoid mechanical deformation by die marking after construction, single ended mixer and detector diodes shall be marked by means of an anodized aluminium or plastic disc inserted and secured into the end of the body. The disc shall be marked with the C.V. number, the factory code letters and the date code. It shall be coloured to indicate the polarity of the pin, viz. red when the pin corresponds to the cathode terminal of a thermionic diode and green when the pin corresponds to the anode terminal of a thermionic diode. The appropriate colour coding will be stated in the Test Specification.

5.C.7.2 Mechanical Stability. A sample of production diodes shall be subjected to a tension test in an approved test instrument in which an axial tensile force of not less than 15 lbs is applied between tip and cap. The diodes shall be tested to 1% AQL at Inspection Level 1A and any breakage shall be deemed to be a failure.

5.C.7.3 Resistance to Breakdown Voltages. The resistance of a diode to breakdown caused by pulse voltages shall be assessed by applying the process described below. The conditions for acceptance or rejection will be stated in the Test Specification.

The diode shall be subjected to 3,000 uni-directional voltage pulses derived from a section of concentric line giving a pulse length of 2.5×10^{-9} seconds, or from an 18 pF condenser at an energy level defined in the Test Specification. The specified energy shall be dissipated in the diode. The repetition rate shall not exceed 5,000 p.p.s. to ensure that the diode does not reach thermal equilibrium. The test equipment shall be subject to the approval of the Inspection Authority.

5.C.7.4 R.F. Properties (Noise Factor, Rectification efficiency, Admittance etc.)

When these tests are required by the Test Specification absolute methods of measurement shall be used where possible.

When applicable, measurements of admittance may be made using holders specified in terms of the RF normalised admittance at some chosen frequency. This shall be measured at an input reference plane when the diode is replaced by a resistive load which matches the feeder in which the diode is situated.

The input reference plane shall be at a position of voltage minimum in the input line when the diode is replaced by a short circuit at some other specified plane.

In these circumstances, the normalised admittance at the input reference plane is related to the normalised crystal admittance at the plane of the short circuit by the expression

$$y_1 = ay_c + jb$$

where a and jb are the real and imaginary parts of the normalised admittance defined above.

The normalised diode admittance to match the holder, measured at the plane of the short circuit is then

$$yc = \frac{y_1 - jb}{a}$$

In other cases, where the absolute accuracy of the measurements is deemed to be inadequate, appropriate approved transfer standards may be used. Standard diodes will not be used for this purpose.

5.C.8 ADDITIONAL REQUIREMENTS FOR GENERAL PURPOSE DIODES

5.C.8.1 Marking. General Purpose Diodes shall be marked with the CV number and other marking as required by the Test Specification. In addition the polarity shall be shown either by "+" and "-" signs or by marking the positive end or connection with red paint. The positive end or connection shall correspond to the cathode terminal of a thermionic diode.

5.C.8.2 Protective Sleeve. An approved protective sleeve shall be fitted to glass envelope diodes to prevent exposure of the diode element to light. The sleeve, when fitted, may carry the marking.

Section 5D

ACCEPTANCE TESTS FOR PHOTOCELLS

Unless otherwise stated in the Test Specification Photocells shall comply with the following requirements together with those given in the Test Specification and with all other sections in this specification except 5.2, 5.3, 5.4, 5.10, 5A, 5B, 5C, 5E, and 5F.

A general inspection of the physical features of the valve shall be made and if it does not comply with the requirements of this specification and of the Test Specification it shall be rejected.

The glass bulb shall be free from defects which may cause distortion of the light falling on the cathode surface.

5.D.1. General Test Requirements. The photocell to be tested shall be placed in an enclosure which screens it from all unwanted radiation. Arrangements shall be made to permit radiation to reach the cell as required by the subsequent clauses of this section and of the Test Specification. Suitable baffles shall, however, be provided to ensure that only direct radiation from the test lamp reaches the cell. The distance between the lamp and the cell shall be large compared with the greater dimension of the cathode (e.g. 20 times).

5.D.2. Light Sources for Test Purposes

5.D.2.1. The light source shall be an incandescent tungsten lamp controlled to operate at 2854°K. At least three lamps shall be certified for luminous intensity and colour temperature at a recognised photometric laboratory. One of these lamps shall be used for testing photocells and the others shall be used for the purpose of checking the calibration of the test lamp.

5.D.2.2. During the life of the test lamp frequent reassessment of calibration shall be made against the standard check lamps. Suitable adjustment shall be made to the position of the lamp to ensure that the light falling on the cell remains at a constant value. The use of any lamp shall be discontinued when the luminous intensity has fallen by 20% of the original value.

5.D.3. Dark Current. The photocell shall be shielded from all radiation and a voltage as specified in the Test Specification shall be applied to the anode. Under these conditions the anode current shall not exceed the specified limit.

5.D.4. Sensitivity Tests. Sensitivity tests shall be carried out with the photocell under test in a suitable enclosure provided with an aperture such that not less than half the cathode area is illuminated with a specified value of light flux.

5.D.5. Spectral Response. A filter, as required by the Test Specification, shall be interposed between the light source and the cell and the output voltage or anode current measured under specified conditions. A further measurement shall then be made without the filter. The ratio of the two readings of voltage or anode current shall be within the limits specified.

5.D.6. Gas Amplification Factor. Where the Test Specification requires a test for the gas amplification factor the conditions shall be as detailed in clause 5.D.4. The anode current shall be measured at the working value of voltage and at a fixed value of 25 volts. The ratio of the two anode current readings shall be within the limits specified.

5.D.7. Sensitivity of Photomultipliers

5.D.7.1. Cathode Photo Sensitivity. With the anode and multiplier dynodes strapped and with a specified voltage applied between them and the cathode the sensitivity shall be measured as for simple photo emissive cells and shall be within the limits specified.

5.D.7.2. Overall Sensitivity. With the specified voltages applied to the dynodes and anodes, the sensitivity shall be measured as for simple photo emissive cells and the overall sensitivity shall be within the limits specified.

SECTION 5E

ACCEPTANCE TESTS FOR G.M. COUNTER TUBES

Unless otherwise stated in the Test Specification Counter Tubes shall comply with the following requirements together with those given in the Test Specification and with all other sections in this specification except 5.2, 5.3, 5.4, 5.5, 5.8, 5.9, 5.10, 5A, 5B, 5C, 5D and 5F.

All Counter Tubes shall operate in the Geiger region and shall be capable of detecting alpha and/or beta electromagnetic radiations according to type, when used with suitable counting apparatus.

Unless otherwise stated in the Test Specification, all G.M. counter tubes shall be operated at a voltage approximating to the specified operating voltage Vw, for a time sufficient to obtain steady values of electrical characteristics, prior to electrical testing. (See 5.E.6).

Mechanical inspection shall be carried out before electrical tests.

5.E.1. General Inspection. A general inspection of the physical features of the counter tubes shall be made and any tubes which do not conform to the requirements specified shall be rejected; in particular, the anode wire shall be taut except where support is made at one end only, and the effective (unscreened) section of anode wire shall be symmetrically located about the line C_L as in individual drawings.

5.E.2. Loose Particles. The tube shall be rejected if it contains any loose particles which may have an adverse effect on its operation.

5.E.3. General Electrical Test Requirements. The counter tube to be tested shall be enclosed in a suitable light proof container unless the design of the tube is such that it is inherently insensitive to light.

The radioactive test source to be used shall, where necessary, be specified both in nature and strength in the Test Specification. Otherwise, any suitable type and strength of source may be used, provided that it shall not cause damage to the counter tube under test.

5.E.3.1. Self-Quenched Counter. All tests shall be carried out with an instrumental resolving time not greater than 350 microseconds, and an instrumental sensitivity as given in the Test Specification.

Test apparatus shall not supply any quenching pulse which may influence performance of the counter tube under test and shall be to the satisfaction of the Approving Authority.

5.E.3.2. Externally Quenched Counter. Test apparatus shall be to the satisfaction of the Approving Authority.

5.E.4. Methods of Plateau Measurement. The count rate/applied voltage characteristic shall be determined by measuring not less than 3000 counts at an average rate of not more than 6000 per minute, at intervals of 40 volts increase in applied voltage when the minimum acceptable plateau length, L_{min}, is 200 volts or greater. If L_{min} lies between 90 and 199 volts inclusive, the interval shall be 20 volts; if L_{min} is under 90 volts, the interval shall be 10 volts. The test shall not be carried on beyond the value of L_{min} + one interval, except where otherwise stated in the Test Specification.

5.E.5. Hysteresis Test. Immediately following completion of the plateau measurement, the count rate at the threshold voltage V_T shall be re-determined, if required by the Test Specification. This value shall not differ from the initial value by more than 10% disregarding statistical fluctuations.

5.E.6. Operating Voltage, Vw. For all tests where the counter tube is required to be operated at the operating voltage Vw, this shall be defined as $(V_T + \frac{1}{2} L_{min})$. The measured value shall be corrected to + 20°C using the average value of temperature coefficient as stated in the Test Specification.

5.E.7. Background Count. This test shall be carried out where required by the Test Specification. The location of the counter tube shall be to the satisfaction of the Approving Authority and measurements made over at least 1000 counts or a time of at least 5 minutes if this gives a lower total count.

Two separate tests are recognised viz.

5.E.7.1. Unshielded Background. This shall be measured with the counter tube screened from light but unshielded by lead or any other material of high atomic number.

5.E.7.2. Shielded Background. This shall be measured with the counter tube screened from light and entirely surrounded by material of sufficient thickness to ensure a weight of material of at least 40 gm per sq. cm (equivalent to 35 mm. of lead). An internal liner of thickness such that the weight is not greater than 1 gm per sq. cm. may be allowed.

5.E.8. Life Tests. For the purpose of Qualification Approval the useful life of a counter is the number of counts after which the plateau length is reduced to $\frac{1}{2} L_{min}$ and/or the plateau slope exceeds the maximum value stated in the Test Specification. The test will be carried out on not less than six tubes at a continuous rate of not greater than 30,000 counts per minute at the operating voltage as defined in 5.E.6 above. Qualification Approval will not be given if the useful life of any one counter tube in the batch is less than 50% of the average value for the batch, or if the average value for the batch is less than 80% of the value as stated in the Test Specification.

5.E.9. Temperature Coefficient. For the purpose of Qualification Approval this will be measured as an average change in threshold voltage (V_T), per degree centigrade change of temperature, over a range of temperature to be specified by the Approving Authority. The test will be carried out on not less than three tubes and Qualification Approval will not be given if the value for any one counter tube exceeds the maximum figure stated in the Test Specification.

5.E.10. Spurious Counts. For Qualification Approval the proportion of spurious counts generated by the counter tube due to any cause will be measured on a sample batch of three tubes using apparatus approved by the Approving Authority. These three tubes will be required in addition to those required for other Qualification Approval tests.

SECTION 5F

ACCEPTANCE TESTS FOR MAGNETRONS

Unless otherwise stated in the Test Specification, magnetrons shall comply with the following requirements together with those given in the Test Specification and with all other sections of this Specification except 5.2, 5.8, 5A, 5B, 5C, 5D, 5E and 7.

5.F.1. Definitions

5.F.1.1. Pulse Characteristics.

5.F.1.1.1. Pulse Amplitude. The amplitude of a pulse waveform is the peak value of a curve drawn through the average of the deviations on the top of a pulse. Any spike on the leading edge of duration less than 10% of the Pulse Length (5.F.1.1.4) shall be ignored. (See Fig. 5F/1).

5.F.1.1.2. Pulse Voltage. The Pulse Voltage is the Amplitude (5.F.1.1.1) of the voltage pulse.

5.F.1.1.3. Pulse Current. The Pulse Current is the Amplitude (5.F.1.1.1) of the current pulse.

5.F.1.1.4. Pulse Length.

(a) The pulse length is the time during which the current, excluding the effects of capacitance current, exceeds 50% of the Pulse Current (5.F.1.1.3).

(b) When the Inspection Authority agrees, the pulse length may be defined and determined by the following alternative method:-

$$\text{Pulse Length} = \frac{I_m}{I_p \times \text{prf}}$$

I_m = Mean Anode Current.

I_p = Pulse anode current (5.F.1.1.3)

prf = Pulse Repetition Frequency.

5.F.1.1.5. Time of Fall of Voltage. The time of fall of voltage is the time taken for the voltage to fall from 85% to 20% of the Pulse Voltage. (5.F.1.1.2).

5.F.1.2. Warming Up Time

(a) The Warming Up Time is the interval between the commencement of application of heater voltage and the commencement of application of H.T.

(b) For test purposes, it is the time within which the H.T. must be applied.

5.F.1.3. Magnetic Field Strength

The Field Strength is the value at the centre of the magnet gap.

5.F.1.4. Duty Cycle. The Duty Cycle is the proportion of time during which the instantaneous value of the anode current exceeds 50% of the Pulse Current. (5.F.1.1.3).

5.F.1.5. Peak Output Power. (Pulse Operation). The Peak Output Power is defined by the following formula:-

$$\text{Peak Output Power} = \frac{\text{Mean Output Power}}{\text{Duty Cycle (5.F.1.4)}}$$

5.F.1.6. Efficiency. The efficiency is the ratio of the R.F. output power to the anode input power.

5.F.1.7. Frequency of Oscillation. The Frequency of Oscillation of a magnetron is the value of the frequency at which the power output per unit frequency interval is a maximum.

5.F.1.8. R.F. Load. The R.F. load is all that part of the apparatus which receives R.F. power from and constitutes the termination of the specified coupling device or section.

5.F.1.8.1. R.F. Load Mismatch. The Mismatch of the R.F. Load (5.F.1.8) at any frequency is either the voltage reflection coefficient or the voltage standing wave ratio (greater than unity) which would occur in a test section consisting of a straight uniform length of transmission line or waveguide whose cross section has dimensions equal to the nominal dimensions specified for the R.F. Load if it were fed with a C.W. signal of that frequency and terminated at the other end by the Load. Where the dimensions of the load waveguide are not specified, the dimensions of the test section are equal to the nominal dimensions of the output end of the specified coupling device or section.

5.F.1.9. Frequency Pulling. The frequency Pulling is the difference between the extremes of Frequency of Oscillation (5.F.1.7) occurring when the phase of the Load Mismatch (5.F.1.8.1) is varied through 360°.

5.F.1.9.1. Frequency Pulling Figure. The Frequency Pulling Figure is the Frequency Pulling measured with a Load Mismatch of voltage reflection coefficient 0.2.

5.F.1.10. Frequency Pushing. The Frequency Pushing is the change in Frequency of Oscillation (5.F.1.7) per unit change in anode current, excluding the effects of thermal expansion of the electrodes.

5.F.1.10.1. Frequency Pushing Figure. The Frequency Pushing Figure is the Frequency Pushing measured at the specified current in megacycles per ampere.

5.F.1.11. Spectrum Width (R.F. Bandwidth). The Spectrum is the variation of power per unit frequency interval with frequency. The Spectrum Width is the difference in frequency between the most widely separated points at which the power per unit frequency is ½ of the highest value occurring in the spectrum.

5.F.1.12. Stability (Pulse Operation). Stability is the ratio of missing pulses to input pulses. A pulse is considered to be missing when its energy in the specified frequency band is less than some specified fraction of the energy of a normal putput pulse.

5.F.1.12.1. Starting Stability. The Starting Stability is the Stability measured during a specified period commencing with the first application of H.T. after the Holding Period.

5.F.1.13. Cold Impedance (Pulse Operation). The Cold Impedance of a magnetron is the impedance presented by the magnetron during the non-oscillating period between pulses to an applied C.W. signal whose frequency is equal to the Frequency of Oscillation (5.F.1.7).

5.F.1.13.1. Cold V.S.W.R. The Cold V.S.W.R. of a magnetron is the voltage standing wave ratio in a straight and uniform test section of transmission line or waveguide with cross-section having the nominal dimensions specified for the R.F. Load (5.F.1.8) terminated by the magnetron together with the specified coupling device or Section and fed with a signal as specified for Cold Impedance (5.F.1.13).

Where the dimensions of the load waveguide are not specified, the dimensions of the test section are equal to the nominal dimensions of the output end of the specified coupling device or section.

5.F.1.13.2. Position of Minimum. The Position of Minimum is the distance from a specified plane to the appropriate voltage minimum of the standing wave pattern in the test section specified under Cold V.S.W.R. (5.F.1.13.1) the distance being positive towards the magnetron.

Where the appropriate voltage minimum does not lie within the test section, its position is defined as the position of a voltage minimum within the test section plus or minus the appropriate integral number of half-wavelengths (in the test section).

5.F.2. Test Procedures for Magnetrons. The tolerances and limits specified in this section shall only apply where no tolerance or limit is given in the individual Test Specification.

5.F.2.1. Magnetic Field. Magnets used for testing magnetrons other than those with integral magnets shall satisfy the following requirements.

5.F.2.1.1. Magnetic Field Strength. The Magnetic Field Strength (5.F.1.3) shall be within ± 3% of the specified nominal value. When a permanent magnet is specified the field strnegth shall be within ± 5% of the specified nominal value.

5.F.2.1.2. Magnetic Field Polarity. Magnetrons shall be tested with the cathode connection nearest to the north pole of the magnet.

5.F.2.1.3. Magnetic Field Uniformity. Magnets shall have pole tips of soft magnetic material of thickness at least one quarter of the specified gap width, having plane faces parallel within 1^{0} and coaxial within 3% of the gap width and of diameter at least equal to the gap width.

5.F.2.2. Cathode and Heater

5.F.2.2.1. Heater Voltage. For oscillation tests the Heater Voltage shall be within ± 3% of the specified value.

5.F.2.2.2. Heater Current Measurement. The heater current shall be measured when substantially stable, but not whilst anode voltage is applied.

5.F.2.2.3. Warming Up Time. The warming up time shall not exceed 5 minutes.

5.F.2.3. Cooling and Pressurising

5.F.2.3.1. Cooling liquid used during testing shall be clean and demineralised to the satisfaction of the Inspection Authority.

5.F.2.3.2. Cooling and Pressurising Air. Cooling air which may come into contact with components subjected to electric fields, including waveguide windows, output and input seals, shall be dry and clean to the satisfaction of the Inspection Authority.

5.F.2.3.3. Pressurising Test. Where an air-tight pressurising seal is required, the leakage shall not exceed that which gives a fall of pressure of 3 lbs/sq. in. per litre per hour when the appropriate part of the valve forms part of the wall of a vessel containing air at a pressure of 45 lbs. per sq. in. absolute, the other side of the valve being open to the atmosphere.

The minimum duration of the test shall be 10 minutes. Observation shall not commence until after 2 minutes.

NOTE:- The Air temperature must be kept constant during the test.

5.F.2.4. R.F. Load. The R.F. Load (5.F.1.8) or, where there is a Specified Load Mismatch (5.F.3.4.2), that part of the R.F. Load between its input end and the source of the specified mismatch, shall not have a reflection coefficient exceeding 0.2 at any frequency within the range + 20% to -5% of the Frequency of Oscillation (5.F.1.7).

The load shall not set up evanescent modes to a degree which, in the opinion of the Inspecting Authority, might significantly affect the behaviour of the valve.

5.F.2.4.1. Matched Load, Residual Mismatch. Where a Matched Load is specified, the Residual Load Mismatch (5.F.1.8.1) shall be such as to give a reflection coefficient not exceeding .05 at the Frequency of Oscillation (5.F.1.7).

5.F.2.4.2. Load of Specified Mismatch. Where an R.F. Load having a specified mismatch is called for, the load Mismatch (5.F.1.8.1) at the Frequency of Oscillation (5.F.1.7) must not be less than the value stated in the Test Specification at all phases of reflection:-

$$r_{min} = \frac{r_1}{r_o}$$

where: r_{min} = the minimum permissible value of the voltage standing wave ratio expressed as a ratio greater than unity,

r_1 = the specified value of Load Mismatch expressed as voltage standing wave ratio greater than unity,

and r_o = the specified maximum value of Residual Mismatch expressed as a voltage standing wave ratio greater than unity.

Alternatively:

$$k_{min} = \frac{k_1 - k_o}{1 - k_1 k_o}$$

where: k_{min} = the minimum permissible value of the modulus of the voltage reflection coefficient,

k_1 = the specified value of Load Mismatch expressed as the modulus of a voltage reflection coefficient,

and k_o = the specified maximum value of Residual Mismatch expressed as the modulus of a voltage reflection coefficient.

5.F.2.5. Pulse Characteristics. See Appendix XIV

5.F.2.5.1. Modulator Impedance. The output voltage of the test modulator on open circuit shall be not less than 1.3 times the operating voltage and the output current on short circuit shall be at least 1.5 times the operating current measured on isolated pulses.

5.F.2.5.2. Modulator Charging Characteristics. The available energy for every pulse in the period immediately following an arc in the magnetron under test shall not be less than the available energy when the magnetron is operating normally.

5.F.2.5.3. Anode Pulse Current. The Anode Pulse Current shall be within ± 5% of the specified value.

5.F.2.5.4. Anode Voltage. The Anode Pulse Voltage (5.F.1.1.2) shall be measured with the valve operating on Matched Load (5.F.2.4.1).

5.F.2.5.4.1. Anode Voltage Pulse Shape. At no instant shall the anode voltage exceed 1.5 times the Pulse Voltage.

5.F.2.5.5. Rate of Rise of Voltage.

A modulator will be accepted as having a suitable Rate of Rise of Voltage if it is demonstrated to the satisfaction of the Inspecting Authority that the maximum rate of rise of voltage measured lies within the specified limits.

During the measurement of rate of rise the modulator will be adjusted so that it would give the specified operating conditions if any otherwise acceptable magnetron were fitted. For the test the modulator shall be terminated by a capacitor of value equal to the nominal input capacitance of the magnetron. The measurements shall be made over the interval between the point when the voltage first equals 80% and the point where it first equals 100% of the pulse voltage of the magnetron. The value shall not fall after its maximum in this interval to less than 95% of the maximum value.

5.F.2.6. Pulse Repetition Frequency. The Pulse Repetition Frequency shall be within ± 5% of the specified value.

5.F.2.7. Mean Anode Current. The Mean Anode Current shall be within ± 2% of the value specified.

5.F.2.8. Nominal Frequency of Magnetron. The Nominal Frequency of a magnetron is the Frequency of Oscillation (5.F.1.7) measured with the magnetron operating under the specified conditions and with a Load of less than the specified Residual Mismatch (5.F.2.4.1) when the anode temperature, measured at the specified point, lies within the limits specified.

5.F.2.8.1. Frequency Grouping. When magnetrons of an identical type but for adjacent frequency bands are being submitted for acceptance tests under the same contract, a valve may be accepted even though the accuracy of frequency measurement does not enable it to be placed with certainty in any one of the specified frequency bands provided that the range of uncertainty lies entirely within two contiguous bands and that the inaccuracy of frequency measurement is not worse than 5 parts in 10^4.

If (due to the uncertainty arising from the tolerances implicit in the definition of Nominal Frequency (5.F.2.8) together with the inaccuracy of measurement) a valve on re-measurement falls within a different frequency band, action shall be taken according to the extent of the discrepancy of measured Nominal Frequency as follows:-

(a) If the discrepancy is less than 1 part in 10^3, the grouping remains unchanged.

(b) If the discrepancy is greater than 4 parts in 10^3, regroup accordingly.

(c) If the discrepancy is between 1 part and 4 parts in 10^3, take the mean of 3 further measurements, and if this mean shows a discrepancy in excess of 1 part in 10^3, regroup accordingly.

5.F.2.9. Calculation of Efficiency. The Efficiency (5.F.1.6) shall be calculated from measurements as follows:-

$$\text{Efficiency} = \frac{W_m}{Va \times I_m} \times 100\%$$

Where W_m = Mean Output Power.

Va = Pulse voltage (5.f.1.1.2); or D.C. anode voltage for C.W. operation.

I_m = Mean anode current

5.F.3. Low Temperature (Operating)

Where tests are required to be performed at a reduced temperature, the conditions specified in Section 10.4 shall apply.

5.F.3.1. During Qualification Approval testing, the valve shall pass the primary and secondary electrical tests specified in the detail test specification. Any measurement of frequency shall take into account thermal factor.

5.F.3.2. During Production Acceptance testing the valve shall pass the primary electrical tests specified in the detail test specification. Any measurement of frequency shall take into account thermal factor.

5.F.4. High Temperature (Operating)

Where tests are required to be performed at a temperature of 100°C the conditions specified in Section 10.5 shall apply.

5.F.4.1. During Qualification Approval testing, the valves shall pass the primary and secondary electrical tests specified in the detail test specification. Any measurement of frequency shall take into account thermal factor.

5.F.4.2. During Production Acceptance testing, the valves shall pass the primary electrical tests specified in the detail test specification. Any measurement of frequency shall take into account thermal factor.

5.F.5. Operation Life (Normally performed during Q.A. testing only)

When an operation life test at high ambient temperature is required, the conditions specified in Appendix VI/6.2 shall apply. On completion of the test, the valve shall pass the high temperature test end points specified in the detail test specification.

5.F.6. High and Low Temperature Life (Non-Operating) Normally performed during Q.A. testing only.

5.F.6.1. Low Temperature

Where a low temperature storage test is required, the conditions specified in Appendix VI/6.1.2. shall apply. On completion of the test the valve shall pass the primary electrical tests specified in the detail test specification.

5.F.6.2. High Temperature

Where a high temperature storage test is required, the conditions specified in Appendix VI/6.1.1. shall apply. On completion of the test the valve shall pass the primary electrical tests specified in the detail test specification.

5.F.7. Temperature Cycling

Where a temperature cycling test is required, the conditions specified in Section 10.6 shall apply. The valve shall be non-operating. On completion of the test the valve shall pass the primary electrical tests specified in the detail test specification.

5.F.8. Air Pressure Tests. (Normally performed during Q.A. testing only).

5.F.8.1. Low Pressure

Where a low pressure test is required, the conditions specified in Section 10.8.1 shall apply. Where specified the wave guide shall be pressurised. Throughout the test the valve shall pass the primary electrical tests specified in the detail test specification and there shall be no evidence of corona, voltage breakdown or overheating.

5.F.8.2. High Pressure

Where a high pressure test is required, the conditions specified in Section 10.8.2. shall apply. On completion of the test the valve shall pass the primary electrical tests specified in the detail test specification.

5.F.9. Moisture Resistance (Normally performed during Q.A. testing only).

Where a test for moisture resistance is required, the conditions specified in Section 10.7 shall apply. On completion of the test the valve shall pass the primary electrical tests specified in the detail test specification.

5.F.10. Heater Resonance and Fatigue

Where a test for heater resonance and fatigue is required, the conditions specified in Section 11.6 shall apply. On completion of the test the valve shall pass the specified life test end points.

5.F.11. Functional Vibration

Where a functional vibration test is required, the conditions specified in Section 11.7 shall apply. During the test, missed pulses, frequency shift, change in power output and frequency modulation shall be monitored at specified intervals. On completion of the test the valve shall satisfy the specified primary electrical tests.

Method A shall be used during Qualification Approval testing when the valve shall in addition satisfy the specified secondary electrical tests.

Method B shall be used during Production Acceptance testing.

5.F.12. Vibration Life

Where a vibration life test is required, the conditions specified in Section 11.8 shall apply. During this test, missed pulses, frequency shift and change in output power shall be monitored at specified intervals.

5.F.13. Fatigue Vibration

Where a vibration fatigue test is required, the conditions specified in Section 11.9 shall apply. On completion of the test the valve shall pass the primary electrical tests specified in the detail test specification.

5.F.14. Functional Shock

Where a shock test is required, the conditions specified in Section 11.10 shall apply. Frequency deviation and change in power output shall be measured immediately after completion of the test.

Method A shall be used during Qualification Approval testing.

Method B shall be used during Production Acceptance testing.

MAGNETRON PULSE WAVEFORM

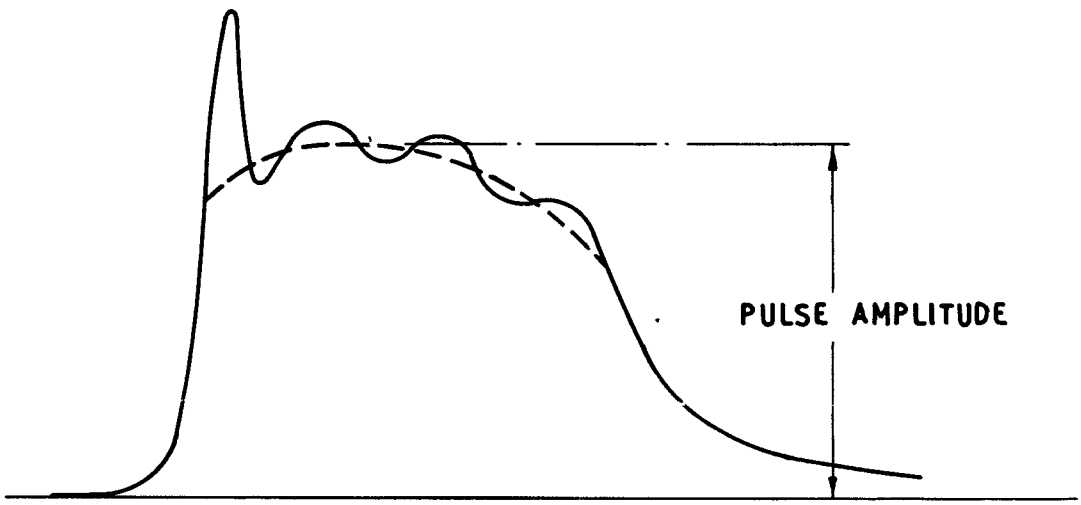

FIG. 5F/1

5G. ACCEPTANCE TESTS FOR GAS FILLED VOLTAGE STABILISERS AND REFERENCE TUBES

This section covers the requirements to be met by Gas Filled Voltage Stabilisers and Reference Tubes supplied for Services use. The tests contained in this section shall apply when specified in the Test Specification.

The load resistor will be specified on the Individual Test Specification.

5.G.1. STRIKING TESTS

Two methods are described but these are not to be used as alternatives unless permitted by the Test Specification.

The ripple content of the supply shall not exceed 0.25% for either method.

Unless otherwise specified, measurements are to be made with normal room illumination (5 to 50 lumen per square foot natural or artificial).

5.G.1.1. Striking Time

Following the specified inoperative period the specified direct voltage shall be applied between the anode and cathode in such a manner that this value is never exceeded. The device shall strike within the specified time measured from the initiation of the voltage. Unless otherwise specified, the time taken for the applied direct voltage to reach the specified maximum, shall not exceed 10% of the specified striking time.

5.G.1.2. Striking Voltage

Following the specified inoperative period a direct voltage shall be applied between anode and cathode. This shall be increased linearly, commencing at the specified maintaining voltage, at a rate not exceeding 25 volts per second until conduction occurs.

5.G.2. DARK STRIKING VOLTAGE

The valve shall be held inoperative in total darkness for at least 24 hours or a minimum period specified on the individual Test Specification. On conclusion of this period and before exposure to light, the specified striking test shall be applied.

5.G.3 MAINTAINING VOLTAGE

The voltage drop between anode and cathode shall be measured at the specified anode current. If a period of conduction is required prior to the measurement of the maintaining voltage this will be stated in the test specification.

5.G.4. REGULATION

This is to be derived by determining the difference between the maintaining voltages at the specified currents.

5.G.5. NEGATIVE IMPEDANCE

When required by the individual Test Specification the valve characteristics shall be examined for negative impedance. A suitable test method is described in the Appendix to Section 5G.

5.G.6. NOISE AND OSCILLATION

The valve shall be operated from a low impedance well filtered, adjustable d.c. supply, the output capacitance of which shall be at least 16 uF. The impedance of the power supply shall not be more than 1/5 of the impedance of the specified load resistor. The current through the valve shall be varied at a specified rate between the specified current values. Either direction of sweep may be used unless otherwise specified.

The anode of the valve shall be coupled by an 0.1 uF capacitor to a voltage amplifier with an input impedance of 100 K ohms. The frequency response of the amplifier shall be flat to within ± 0.5 dB of the response at 400 c/s over the frequency range from 50 c/s to 25 kc/s, not more than 3 dB down at 25 c/s and 100 kc/s, the fall off thereafter being 6 dB per octave.

The noise output of the valve under test which may be displayed on a cathode ray tube will be specified and shall be measured as a peak to peak voltage.

A voltage that exceeds the specified noise limit but which persists for less than a specified current range within the total current sweep shall be considered as a voltage jump.

Other indicating devices of a less subjective and more automatic nature may be used provided that the response can be shown to be in substantial agreement with that given by the Cathode Ray Tube display.

This measurement shall not include voltage jumps.

5.G.7. VOLTAGE JUMPS OR DISCONTINUITY

Using the equipment specified in 5.G.6. the current through the valve shall be varied at a specified rate between the specified values. The maximum amplitude of a voltage jump shall be measured as a peak voltage. The method of sweep i.e. one direction or both, shall be specified.

5.G.8. MICROPHONIC NOISE

With the current through the valve fixed at a specified value and using the equipment described in 5.G.6. the valve shall be tapped by an approved mechanical device, the direction and number of taps to be detailed in the individual Test Specification. Limits for Microphonic noise shall be specified as millivolts peak to peak.

5.G.9. RESONANCE SEARCH

Using the equipment described in 5.G.6 with the valve current fixed at a specified value the valve shall be mounted in an approved holder (see Drawing No.4 Appendix X) and vibrated as specified in Section 11.2. The limits of noise output shall be measured in millivolts peak to peak.

5.G.10. TEMPERATURE COEFFICIENT

Unless otherwise specified in the individual Test Specification the valve current shall be set at the specified value with the envelope immersed in a bath of high thermal capacity at a temperature of 25 ± 5°C and allowed to stabilise for three minutes. The Maintaining Voltage shall be recorded.

The valve envelope shall then be immersed in a bath of high thermal capacity for a specified period at temperature T1. and the Maintaining Voltage recorded at the end of this time.

The valve envelope shall then be re-immersed for a specified time in the bath at 25 ± 5°C and the Maintaining Voltage recorded.

The valve envelope shall then be immersed in a bath of high thermal capacity for a specified period at temperature T2 and the Maintaining Voltage recorded at the end of this time.

The temperature coefficient shall be computed in milli-volts per degree centigrade from the recorded changes of Maintaining Voltage from 25 ± 5°C to T1 and T2.

This test shall not be done more than once on any individual valve.

When the valve envelope is immersed in a bath of high thermal capacity maintained at the required temperature, the temperature of this bath measured close to the valve shall be considered to be temperature of the envelope.

This is not the temperature which the envelope would assume in air at 25°C and the results obtained must be interpreted accordingly.

5.g.11. LIFE TEST

Life test shall be done under specified conditions of envelope temperature, anode current and, when necessary, illumination.

5.G.12. SHELF LIFE TEST

The Striking and Maintaining Voltage shall be recorded and the valves stored for a specified period. The Striking and Maintaining Voltage shall again be measured at the end of this period.

Unless specified otherwise this test will be applied only for Type Approval purposes.

5.G.13. LEAKAGE CURRENT

With an ambient illumination of 5 to 50 lumen per square foot a specified voltage shall be applied to the valve in series with a specified resistor and the current through the valve/resistor combination measured.

APPENDIX TO SECTION 5G

THE MEASUREMENT OF NEGATIVE IMPEDANCE IN GAS-FILLED STABILISER VALVES

The presence of negative impedance or regulation in a stabiliser can be detected by plotting a static characteristic. A close approximation to this can be achieved conveniently be means of the basic circuit of Fig.1 enabling a dynamic characteristic to be displayed on a cathode ray tube.

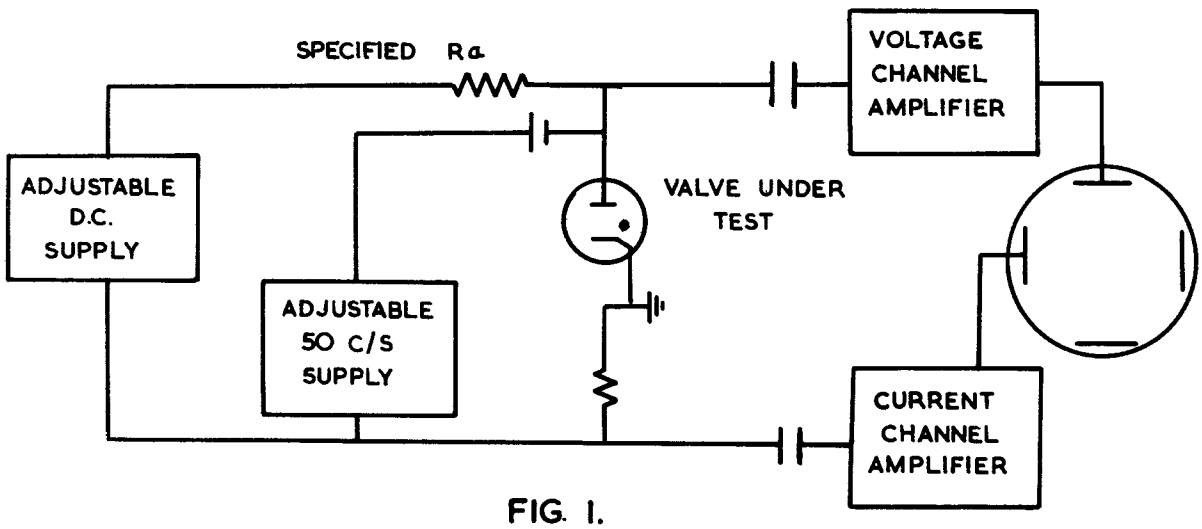

FIG. 1.

Prior to testing a valve in the above circuit, a resistor, of equivalent incremental resistance is substituted for the valve under test. The phase relationship of the amplifiers is then adjusted so that when a.c. is passed through the resistor a straight line is displayed on the cathode ray tube.

With the valve under test in the circuit and the a.c. supply disconnected the anode current of the stabiliser is set to the mid-point of its specified d.c. operating range. The 50 c/s sine wave voltage is then superimposed and adjusted to vary the stabiliser current between the limits of its current range. The voltages developed across the stabiliser and current monitoring resistor are then displayed on the C.R.T. as an Ia/Va curve.

The basic shape of any characteristic will be that of an ellipse the major axis of which represents the impedance of the stabiliser (Fig.2).

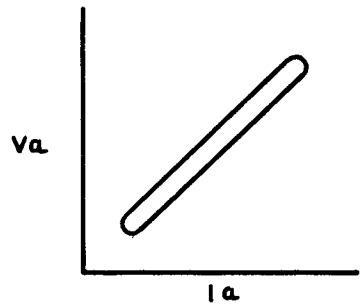

FIG. 2.

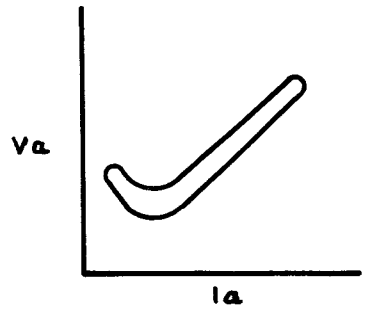

FIG. 3.

Negative impedance is indicated by a slope in the opposite direction Figure 3 shows a combination of negative and positive impedance. Voltage jumps of appreciable amplitude will appear as regions of high negative impedance.

Oscillations of appreciable amplitude can be detected, and the current range over which they occur can be noted. Regulation can be assessed by direct measurement of the display.

To facilitate correlation the frequency of the a.c. supply must be 50 c/s.

Section 5 H

MICROWAVE GAS DISCHARGE DEVICES

INDEX

5.H.1. Definitions

5.H.2. General Test Conditions

- 5.H.2.1. Frequency and wavelength
- 5.H.2.2. Reference Point and voltages
- 5.H.2.3. Test Equipment
- 5.H.2.4. Measurement of Power
- 5.H.2.5. D.C. Primer Supply
- 5.H.2.6. Tunable cells
- 5.H.2.7. Pre-Test Holding Period
- 5.H.2.8. High Power R.F. Load Characteristics
- 5.H.2.9. Pulse Repetition Frequency
- 5.H.2.10. High Level Firing Test
- 5.H.2.11. Resonance Tuning
- 5.H.2.12. Test Frequency
- 5.H.2.13. Leakage Measurements
- 5.H.2.14. R.F. Power Level for Low Level Tests (5.H.4.1.)

5.H.3. Electrical Tests

- 5.H.3.1. Primer Tests
  - 5.H.3.1.1. Ignition test
  - 5.H.3.1.2. Primer Current
  - 5.H.3.1.3. Oscillations
  - 5.H.3.1.4. Primer Leakage Resistance

5.H.4. R.F.Tests

- 5.H.4.1. Low Level Tests
  - 5.H.4.1.1. Insertion Loss
    - 5.H.4.1.1.1. Total Insertion Loss
    - 5.H.4.1.1.2. Insertion Loss (No D.C. Primer Current)
    - 5.H.4.1.1.3. Primer Interaction
    - 5.H.4.1.1.4. Integral tunable cavity type cell
    - 5.H.4.1.1.5. Fixed Tune
    - 5.H.4.1.1.6. External Cavity type cell
  - 5.H.4.1.2. Excess Noise
  - 5.H.4.1.3. V.S.W.R.
    - 5.H.4.1.3.1. METHOD I
    - 5.H.4.1.3.2. METHOD II
  - 5.H.4.1.4. Tuning Range
  - 5.H.4.1.5. Fixed Tuning
  - 5.H.4.1.6. Centre Frequency
  - 5.H.4.1.7. Conductance and Susceptance

5.H.4.1.7.1. Equivalent Conductance
5.H.4.1.7.2. Tuning Susceptance

5.H.4.1.8. Q. Measurements

5.H.4.1.8.1. Loaded Q

5.H.4.1.8.1.1. T.R. Cells
5.H.4.1.8.1.2. T.B. Cells

5.H.4.1.8.2. Unloaded Q

5.H.4.1.8.2.1. High Q External Cavity
5.H.4.1.8.2.2. Relative Method
5.H.4.1.8.2.3. Primer Interaction (Δ Q)

5.H.4.1.9. Mode Purity (T.B. Cells)
5.H.4.1.10 Electrical length (T.R. cells)

5.H.4.2. High Level Tests

5.H.4.2.1. Firing Time
5.H.4.2.2. Arc Loss
5.H.4.2.3. High Level V.S.W.R.
5.H.4.2.4. Leakage Measurements

5.H.4.2.4.1. Total Leakage Energy
5.H.4.2.4.2. Spike Leakage Energy

5.H.4.2.4.2.1. Narrow Band Cells
5.H.4.2.4.2.2. Broad Band Cells

5.H.4.2.4.3. Flat Leakage Power
5.H.4.2.4.4. Low Power Leakage

5.H.4.2.5. Recovery Time

5.H.4.2.5.1. Constant Attenuation
5.H.4.2.5.2. Constant Delay
5.H.4.2.5.3. Pre T.R. Cells

5.H.4.2.6. Attenuation Characteristic
5.H.4.2.7. Position of Short
5.H.4.2.8. Firing Power
5.H.4.2.9. Minimum Breakdown Power

5.H.5. Environmental Tests

5.H.5.1. Mechanical Tests

5.H.5.1.1. Pressure Operation
5.H.5.1.2. Vibration/Frequency deviation (Tunable cells)
5.H.5.1.3. Vibration

5.H.5.2. Temperature Tests

5.H.5.2.1. Primer Current Temperature drift
5.H.5.2.2. Frequency temperature coefficient
5.H.5.2.3. Temperature Cycling

5.H.5.2.3.1. General
5.H.5.2.3.2. Holding Period Test (T.R.Cells)
5.H.5.2.3.3. Holding Period Test (T.B.Cells)

5.H.5.3. Life Tests

MICROWAVE GAS DISCHARGE DEVICES

This section refers to microwave gas discharge devices such as Pre-T.R., T.R., and A.T.R. or T.B. cells.

The general test conditions shall apply to all cells but the individual tests contained herein shall apply as and when specified in the Test Specification. If significant differences occur between the test figures obtained by the manufacturers and those obtained at the Service Establishments, the Approving Authority will provide an agreed correction for the guidance of Inspecting Officers.

5.H.1. Definitions

5.H.1.1. Primer Ignition. The process of creating local ionisation by means of an applied primer voltage.

5.H.1.2. Firing. The ionisation of the cell which occurs due to the R.F.voltage.

5.H.1.3. Primer Current. The current which flows when a voltage is applied to the primer electrode for the purpose of increasing the electron density in the breakdown gap of the cell in order to facilitate the ionisation of the cell on the occurrence of high R.F. power.

5.H.1.4. Primer Interaction. The variations of the electrical parameters of the cell caused by primer current (5.H.1.3)

5.H.1.5. Excess Noise. Is that increase in noise power expressed in db which is indicated in the output of a double channel receiver due to Primer Ignition (5.H.1.1.)

5.H.1.6. Total Insertion Loss. The loss of power expressed in decibels incurred in a transmission system due to the insertion of the cell between a matched generator and a matched load, with the cell operating under normal primer conditions.

5.H.1.7. Centre Frequency. Defined as the geometric mean of the frequencies at which the measured V.S.W.R. values looking into the cell are equal and within a specified range.

5.H.1.8. Firing Power. The minimum applied R.F. power which causes the cell to fire, under specified operating conditions.

5.H.1.9. Firing Time. The time required for the cell to fire after the application of the high R.F. power.

5.H.1.10 Peak Attenuation. The Maximum additional attenuation obtained in a pulsed microwave attenuator by the application of the specified excitation pulse.

5.H.1.11 Minimum Breakdown Power. The level of incident power upon the cell causing electrical breakdown at or near the cell in a transmission system when that power is raised gradually from a low level.

5.H.1.12 Power Rating. The maximum R.F. power which may be applied to the cell without reduction of the specified life period of the cell.

5.H.1.13. Arc Loss. Defined as that attenuation change expressed in decibels obtained when the fired cell is replaced by a metallic short circuit.

5.H.1.14. Leakage Power.

5.H.1.14.1. Low Power Leakage. The maximum total leakage power through the cell which occurs as the incident power on the cell is gradually increased over a specified range extending from a point below to a point above that power level at which the cell fires.

5.H.1.14.2. Total Leakage Energy. The total energy expressed as ergs per pulse which is transmitted through the cell when a high power R.F. pulse is applied. The primer conditions shall be as specified.

5.H.1.14.3. Spike Leakage Energy. (Expressed as ergs per pulse) The initial high intensity pulse of energy composed of continuous frequency sidebands extending to approximately ± 100 Mc/s from the carrier frequency which is transmitted through the cell prior to the firing of the cell when a high power R.F. pulse is applied.

5.H.1.14.4. Flat Leakage Power. (expressed as peak watts). The power which is coupled through the cell during the period when the cell is fully fired.

5.H.1.14.5 Prepulsed Leakage Power. (T.R.cells) The leakage power measured when a specified current pulse is applied to the auxiliary electrode immediately prior to the R.F. pulse. The main primer operating as specified. In cells having no special prepulsing electrode the current pulse may be applied to the main primer superimposed on the specified steady primer conditions.

5.H.1.15. Recovery Time. That period of time following the instant at which the R.F. ionising pulse ceases which is required before the attenuation caused by the cell to a low power signal falls to a level removed from that existing immediately before the occurrence of the R.F. ionising pulse by 6 db or by the specified number of decibels.

5.H.1.16. Electrical Length. The length of specified waveguide which has the same effective electrical length as the cell.

5.H.1.17. Primer Leakage Resistance. The D.C. resistance between the primer electrode and the body of the cell when the cell is in a de-ionised state.

5.H.1.18. Pulse Characteristics. (Magnetron current and attenuator primer)

5.H.1.18.1. Pulse amplitude. The amplitude of a pulse waveform is the peak value of a curve drawn through the average of the deviations on the top of a pulse. Any spike on the leading edge of duration less than 10% of the pulse length (5.H.1.18.3.) shall be ignored.

5.H.1.18.2. Pulse Current. The pulse current is the amplitude (5.H.1.18.1) of the current pulse.

5.H.1.18.3. Pulse Length

(a) The pulse length is the time during which the current excluding the effects of capacitance current, exceeds 50% of the pulse current. (5.H.1.18.2)

(b) Alternatively, when the Inspection Authority agrees, the pulse length may be defined and determined from the following expression.

$$\text{Pulse length} = \frac{I_m}{I_p \times \text{P.R.F.}}$$

Where I_m = Indicated mean current

I_p = Pulse current (5.H.1.18.2)

PRF = Pulse Repetition Frequency

5.H.1.18.4. Duty Cycle. The duty cycle is the proportion of the time during which the instantaneous value of the current exceeds 50% of the Pulse Current (5.H.1.18.2)

5.H.1.19. R.F. Pulse Length. The period of time for which the amplitude of the pulse waveform as seen when using an approved detector and C.R.O. exceeds 10% of the indicated pulse amplitude (5.H.1.18.1)

5.H.1.20 R.F. Load. The R.F. load is all that part of the circuit which receives R.F. power from and constitutes the termination of the specified coupling device, mount or section.

5.H.1.20.1. R.F. Load Mismatch. The mismatch of the R.F. Load (5.H.1.20) at any frequency is either the voltage reflection coefficient or the V.S.W.R. (greater than unity) which would occur in a test section consisting of a straight uniform length of transmission line or waveguide, whose cross section has dimensions equal to the nominal dimensions specified for the R.F. load, if it were fed with a C.W. signal of that frequency and terminated by the load.

Where the dimensions of the load waveguide are not specified, the dimensions of the test section are equal to the nominal dimensions of the output end of the specified coupling device.

5.H.2. General Test Conditions

5.H.2.1. Frequency and Wavelength. If frequencies are converted to wavelength for the convenience of testing the value $c = 2.998 \times 10^{10}$ cm/sec shall be used.

5.H.2.2. Reference Point and Voltages. The polarity of all voltages applied to the electrodes shall be specified relative to the body of the cell.

5.H.2.3. Test Equipment

5.H.2.3.1. Test Mount. All external test cavities and test mounts shall be those specified and/or approved by the R. and D. Authority. The use of these cavities and mounts shall be implicit in all tests contained in this Section.

5.H.2.3.2. Test Circuit Equivalence. The tests contained in this section shall be made using the specified circuit or an approved equivalent.

5.H.2.3.3. Matched Termination and Generator V.S.W.R. Where cells have V.S.W.R. less than 1.17 : 1. the generator and detector V.S.W.R. values shall not exceed 1.1 : 1. This will in general, ensure an accuracy of ± 0.1 db. For higher values of cell V.S.W.R., tighter limits of generator and detector V.S.W.R. are necessary and will be specified. If a fixed padding attenuator is used immediately before the detector in order to improve the effective V.S.W.R., it shall be considered as part of the detector when interpreting the specified requirements.

5.H.2.4. Measurement of Power

5.H.2.4.1. Crystal Detectors. An approved method of calibrating the crystal response in terms of relative power levels shall be used when output power is examined by means of the output from a crystal rectifier.

5.H.2.4.2. Thermistors.

5.H.2.4.2.1. The calibration of the thermistor mount shall be referred to a specified standard power level. The direct calculation of power from D.C. considerations shall not be more than 10% less than the R.F. calibration figure.

5.H.2.4.2.2. The measured V.S.W.R. of the mount with the bridge at balance shall not exceed 1.1 : 1 for the specified frequency range when leakage power is measured by means of a thermistor.

5.H.2.4.2.3. In addition to 5.H.2.4.2.2. the V.S.W.R. with the bridge at balance shall not exceed 1.33 : 1 for a wider specified frequency range as and when required.

5.H.2.4.2.4. The efficiency of the thermistor shall be as specified.

$$\text{Eff} = \frac{\text{Indicated power}}{\text{Incident power}}$$

5.H.2.4.2.5. Thermistors for use at wavelengths shorter than 5 cms shall have their output response in terms of relative R.F. power levels checked by an approved method. Appreciable error may be experienced due to the effect of the thermistor capacity causing a low impedance shunt across the measuring element.

5.H.2.4.3. The mean power output from the magnetron used in any test cortained herein shall be measured by means of a calibrated water load.

5.H.2.4.4. The peak power output shall be measured by any of the three following methods. It shall be within ± 10% of the specified power level.

5.H.2.4.4.1. By the measurement of mean power as in 5.H.2.4.3. and the ratio of peak to mean current through the magnetron.

$$\text{Peak power} = \text{mean power} \times \frac{\text{peak}}{\text{mean}} \text{ current}$$

5.H.2.4.4.2. By the measurement of mean power as in 5.H.2.4.3. the P.R.F. and the pulse width at half amplitude.

$$\text{Peak Power} = \frac{\text{mean power}}{\text{P.R.F. X pulse width}}$$

5.H.2.4.4.3. By means of a calibrated coaxial diode and measuring the voltage developed across it using a C.R.O. The measuring equipment shall initially be set up using one of the methods contained in 5.H.2.4.4.1. and 5.H.2.4.4.2., and the values obtained shall correlate within ± 4%.

5.H.2.4.5. Directional Couplers. Errors due to the modified coupling obtained with the presence of standing waves in the line, or errors due to insufficient directivity in the coupler permitting coupling of reflected power may occur when using directional couplers for the purpose of measuring incident line power. These errors may be eliminated by the insertion of an approved calibrated attenuator immediately after the coupler.

5.H.2.5. D.C. Primer Supply. The D.C. primer supply voltage shall be within ± 2% of the specified value, and the total resistance of the supply source shall be within ± 5% of the specified value. Not less than 0.5 Megohm of this source resistance shall be connected directly to the primer electrode of the cell under test. Primer resistors which are built into the cell shall be considered as part of the source resistance. The D.C. primer voltage shall not have a superimposed ripple component greater than 1% peak to peak and the regulation over the current range from zero to the operating current should be better than 1%.

5.H.2.6. Tunable Cells. The tuning of the cells shall be effected smoothly and without discontinuities over the specified frequency range. No cell shall require less than the specified number of complete turns of the tuning screw to cover this range. The tuning screw shall be fully cycled before electrical tests are performed.
Where the tuning of the cell involves the movement of the breakdown cones of the cell, a test shall be made using an electrical continuity tester to ensure that the cones do not touch when the tuning control is cycled through its entire range.

5.H.2.7. Pre-Test Holding Period. Test cells shall be stored in darkness for a period of not less than seven days before any tests contained in this section are performed.

5.H.2.8. High Power R.F. Load Characteristics. The high power R.F. load (5.H.1.18) shall not have a V.S.W.R. exceeding 1.1 : 1 at the reference frequency of test nor shall it have a V.S.W.R. greater than 1.5 : 1 at any frequency within the range + 20% to − 5% of the frequency of oscillation. The load shall not set up evanescent modes to a degree which, in the opinion of the approval or Inspection Authority might significantly affect the test results.

5.H.2.9. Pulse Repetition Frequency (P.R.F.) The P.R.F. shall be within ± 10% of the specified value and shall be measured to an accuracy of ± 1%.

5.H.2.10 High Level Firing Test (T.B.cells) The test contained in section 5.H.4.2.1. shall be performed before any other High Level test.

5.H.2.11 Resonance Tuning Tuning to the resonance frequency of a cell shall, where possible, be indicated by the minimum value of V.S.W.R. Where the V.S.W.R. method is not convenient resonance may be obtained by tuning for a pronounced peak in the observed output power.

5.H.2.12. Frequency of Test. (Reference frequency) Specified frequencies shall be accurate within

(a) for High Power tests - a 2% bandwidth centred at the reference frequency.
and
(b) for Low Power measurements - a 0.2% bandwidth centred at the reference frequency.

5.H.2.13 Leakage Measurements. Where the specified test conditions introduce difficulties into the performance of the Leakage Tests as given in 5.H.4.2.4. the alternative method known as flat-cancellation may be used if approved.

5.H.2.14 The R.F. power level at which the Low Level Tests (5.H.4.1) are made shall be specified and shall normally be of that order at which the cell will operate when in functional use.

5.H.3 Electrical Tests

5.H.3.1. Primer Tests (keep alive)

5.H.3.1.1. Ignition Test. The cell shall be connected as shown in Fig.(5H/1) and the specified D.C. voltage shall be applied to the primer electrode or electrodes via a specified series resistor. The time required for the cell to ignite shall be measured. This test shall be performed with the cell in darkness. Each primer shall be tested individually when the cell has more than one primer electrode.

5.H.3.1.2. Primer Current. The cell shall be connected as in Fig.(5H/1) and the specified D.C. voltage applied to the primer electrode or electrodes via the specified series resistance. The resultant current shall be measured.

5.H.3.1.3. Oscillations. The cell shall be tested in the circuit shown in Fig.(5H/2). The specified D.C. voltage shall be applied and the primer current adjusted by means of a variable resistance in series with the primer electrode. The minimum current which prevents relaxation oscillations shall be measured. Relaxation oscillations are indicated on the oscilloscope trace.

5.H.3.1.4. Primer Leakage Resistance. Primer Leakage Resistance as defined in 5.H.1.17, shall be measured using any approved method capable of determining high order resistances. Care must be taken to ensure that the applied voltage is not sufficient to cause ignition.

5.H.4. R.F.Tests

5.H.4.1. Low Level Tests

5.H.4.1.1. Insertion Loss. The loss shall be measured by a transmission method in a circuit as shown in Fig.(5H/3) in which the cell is inserted between a matched generator and matched load.

5.H.4.1.1.1. Total Insertion Loss. The specified voltage shall be applied to the primer electrodes and the value of insertion loss measured by adjustment of the calibrated attenuator or by an approved method on replacing the cell by a section of waveguide of equal physical length.

5.H.4.1.1.2. Insertion Loss. No D.C. Primer Voltage shall be applied to the primer electrodes, and the value of insertion loss measured as given in 5.H.4.1.1.1.

5.H.4.1.1.3. Primer Interaction. This shall be obtained by subtracting the value of loss obtained in 5.H.4.1.1.2. from that value obtained in 5.H.4.1.1.1.
ALTERNATIVELY - The specified voltage shall be applied to the primer electrodes and the value of the insertion loss obtained as an arbitrary reading of the calibrated attenuator. The primer voltage shall then be removed and the change in attenuation recorded.

5.H.4.1.1.4. Integral Tunable Cavity Type Cell. The loss shall be measured in a circuit as given in 5.H.4.1.1. The frequency and power output of the signal generator shall be adjusted to the specified values. The cell shall then be tuned to resonance. The cell shall be rejected if in addition to more than one peak of output power being observed as the tuning screw is tuned over its complete range, either :

(a) more than 20° movement of the tuning control is required to tune from the top of the seconday peak to a position nearest to that secondary peak on the main curve of the tuning characteristic where the same output power is obtained.

or (b) the difference in amplitude between the secondary peak power and the output power in the bottom of the valley connecting the secondary peak to the main is greater than 10 per cent of the main peak output. See fig. (5H/4).

5.H.4.1.1.5. Fixed Tune. The signal generator shall be adjusted to the reference frequency and the loss measured as in 5.H.4.1.1.1.

5.H.4.1.1.6. External Cavity Type Cell. The signal generator shall be adjusted to the reference frequency and the output power measured. The cell shall then be replaced by an approved cavity calibrator (dummy cell) and the change in output recorded in decibels as indicated on the calibrated attenuator.

5.H.4.1.2. Excess Noise. The cell shall be connected to the input of a receiver having a specified noise factor. The increase of noise factor obtained on the application of the specified primer current through the cell shall be recorded. The application of primer current shall not cause the cell V.S.W.R. value to change by an amount exceeding 0.05. V.S.W.R. changes exceeding this amount may be cancelled by the use of a variable mismatch unit.

5.H.4.1.3. Voltage Standing Wave Ratio.

5.H.4.1.3.1. T.R. Cells. The cell shall be inserted in an approved low level transmission circuit equivalent to that shown in Fig. (5H/5) between a matched signal source and matched load. The signal generator shall be tuned to the reference frequency, and adjusted to give the specified power output. The standing wave ratio shall be measured. This test shall be performed with the specified primer current applied to primer electrode/s.

5.H.4.1.3.2. Pre T.R. Cells. The cell shall be inserted in the specified duplexing mount and connected in an approved transmission circuit equivalent to that shown in Fig. (5H/5). The V.S.W.R. looking from any arm of the duplexing mount shall not exceed 1.2 : 1. The signal generator shall be tuned to the reference frequency, and adjusted to give the specified incident power onto the duplexing mount. The V.S.W.R. shall be measured. If specified the transmitter arm of the duplexing mount shall be terminated by a variable short circuit plunger to simulate a quiescent transmitting valve. In this case the V.S.W.R. shall be measured with the plunger adjusted through all phases and the worst value recorded. The V.S.W.R. under all given conditions shall be measured with the cell position in the duplexing mount being varied to include all positions where the operating region of the cell couples into both channels of the duplexer.

5.H.4.1.4. Tuning Range. In this test the load shall not introduce a mismatch greater than one tenth of that specified for the cell - (e.g. Cell V.S.W.R. 1.2 : 1 therefore load V.S.W.R. 1.02:1). The cell shall cover the minimum frequency range specified when tested in a circuit as in Fig.(5H/5). Resonance of the cell is indicated by the minimum value of V.S.W.R.

5.H.4.1.5. Tuning - Fixed. The cell shall be inserted between a matched signal generator and matched detector. The signal generator frequency shall be varied to obtain the resonant frequency of the cell and its cavity. The resonant frequency shall be measured.

5.H.4.1.6. Centre Frequency. The cell shall be inserted in the specified mount and connected in the circuit shown in Fig.(5H/5), between a matched signal generator and matched load. The power output from the signal generator shall be adjusted to the specified value and maintained constant. The frequency shall be varied over the specified band and a number of V.S.W.R. values corresponding to frequencies within that band shall be obtained. From the resulting V.S.W.R/frequency characteristic curve the centre frequency shall be computed as the geometric mean of the frequencies at which the V.S.W.R. values are equal and within the specified limits.

5.H.4.1.7. Conductance and Susceptance (T.B. Cells) The cell shall be fitted in the specified series mount and inserted in a transmission line circuit as shown in Fig.(5H/5) with the matched termination replaced by a variable short circuit plunger. The operating conditions shall be adjusted to those specified. Measurements of the V.S.W.R. shall be made over the required frequency band, with the variable short circuit plunger adjusted at each test frequency to produce a minimum value of V.S.W.R. From the resultant V.S.W.R./Frequency characteristic curve the Conductance and Susceptance values may be derived as follows:

(a) Conductance (G) $= \frac{1}{r_o}$

where r_o = The maximum value of V.S.W.R. indicated on the V.S.W.R/Frequency curve. The maximum value of the V.S.W.R/Frequency curve will occur at the resonant frequency of the cell (fo)

(b) Susceptance (B) $= \pm \sqrt{\frac{G}{\text{V.S.W.R.}} - G^2}$

$$= \pm \sqrt{\frac{1}{r_o}\left(\frac{1}{r} - \frac{1}{r_o}\right)}$$

where r = V.S.W.R. at any frequency.

5.H.4.1.7.1. Equivalent Conductance. Shall be measured by one of the following methods using the circuit shown in Fig.(5H/5).

Method I. The cell shall be fitted in the specified T-junction mount between a matched signal generator and matched load. The V.S.W.R(r) shall be measured over a narrow band of frequencies centred around the specified frequency, and a V.S.W.R/Frequency curve obtained. The maximum value of V.S.W.R.(r_o) occurs at the resonant frequency of the cell when the susceptance (b) is zero. The

equivalent conductance may then be obtained from

$$g = \frac{1}{r_o - 1}$$

Method II. The cell shall be fitted as in Method I with the load replaced by a matched power reading detector. The equivalent conductance shall be obtained by the measurement of the incident power (P_i) upon the cell, and the power which is transmitted to the matched detector (P_t) when the frequency of the signal generator is adjusted to the resonant frequency of the cell. The value of equivalent conductance may be obtained from:

$$g = \frac{1}{2\,(K - 1)}$$

where $k = \frac{P_i}{Pt}$

The difference in attenuator reading on replacing a dummy metallic short inserted in the mount by the cell will given the ratio $\frac{P_i}{Pt}$. It is essential that the power output from the signal generator remains constant during the period of the test.

Method III (Relative) The cell shall be fitted in the specified mount and inserted in a circuit as shown in Fig.(5H/6). Operating at the reference frequency the short circuit plunger shall be adjusted for minimum reading on the matched power detector. This reading shall be recorded as a conductance value. The cell shall be tested on a relative basis by comparison of the reading of the matched detector obtained during the test with the calibration curve of the detector output obtained when using cells which had previously been tested by Method I or Method II. The calibration curve shall be checked at intervals not exceeding 30 days.

5.H.4.1.7.2. Tuning Susceptance. The cell shall be inserted in the specified T. junction mount between a matched generator and matched load as indicated in Fig.(5H/5). The susceptance shall be measured by one of the following methods.

Method I. The susceptance shall be measured by comparing the phase of the standing wave in front of the cell with the phase obtained using a standard cell chosen to be resonant at the reference frequency. The susceptance shall be computed from

$$b = \frac{(1 + 2g)}{2} \tan \frac{4\pi\Delta\ell}{\lambda g R}$$

where $b = \frac{B}{Y_R}$ = normalised susceptance of the cell

$g = \frac{G}{Y_R}$ = normalised conductance of the cell (see 5.H.4.1.7.1.)

$\Delta\ell$ = phase shift of voltage standing wave from sample to standard.

λgR = Guide wavelength (same units as for $\Delta\ell$) at reference frequency

For small values of $\Delta\ell$ the expression may be written

$$b = (1 + 2g)\ \frac{2\pi\Delta\ell}{\lambda gR}$$

Alternatively the circuit may be equivalent to that shown in Fig. (5H/6) and $\Delta\ell$ obtained from the adjustment of short circuit plunger.

Method II This method requies the determination of the ratio of the power incident on the cell (Pi) and the power transmitted through the cell to the load (Pt) when measured at the reference frequency. The susceptance of the cell may then be computed from

$$b^2 = \frac{K(1 + 2g)^2 - 4g^2}{(4 - 4K)}$$

where g = normalised conductance of the cell (obtained from 5.H.4.1.7.1.)

$$K = \frac{P_t}{P_i}$$

The reflected power from the cell is comparable in magnitude to the incident power and hence if a directional coupler is used for measurement of P_i care must be exercised. (See 5.H.2.4.5.)

5.H.4.1.8. Q. Measurements

5.H.4.1.8-1. Loaded Q

5.H.4.1.8.1.1. T.R. Cells. The cell shall be inserted in a transmission circuit (5H/5) between a matched signal generator and a matched detector. There should be sufficient attenuation between the signal generator and the

cell to prevent frequency or power changes in the signal generator due to the tuning of the cell. The loaded Q shall be measured by one of the following two methods.

Method I The cell shall be tuned to resonance (f_o) with the signal generator operating at the reference frequency. The power output shall be measured. The frequency of the signal generator shall then be tuned to points above and below resonance where the measured output power is reduced to half the peak value. The two frequencies f_1 and f_2 where half power readings are obtained shall be recorded. The value of loaded Q is derived from

$$Q = \frac{f_o}{f_1 - f_2}$$

It is essential that the output power of the signal generator is stable in amplitude to better than 1% over the frequency band f_1 to f_2. If this is not obtainable the frequency/power output characteristic of the signal generator must be determined and the necessary corrections applied.

Method II Measurements shall be made of the input V.S.W.R. when the cell under test is tuned to resonance at the reference frequency and the frequency of the signal generator is varied over a narrow band centred about the specified reference frequency. A V.S.W.R/frequency characteristic curve shall then be drawn. The cell resonant frequency shall be determined from the V.S.W.R/ frequency curve. Resonant frequency occurs where the V.S.W.R. (r_o) is a minimum and the half power transmission frequencies may be obtained from V.S.W.R/ frequency curve by locating those frequencies where the half power V.S.W.R. value occur. The half power V.S.W.R. (r) shall be computed from

(a) High Q: $$r = \frac{r_o + 1 + \sqrt{r_o^2 + 1}}{r_o + 1 - \sqrt{r_o^2 + 1}}$$

or

(b) Low Q: $$r = \frac{\sqrt{(r_o + 1)^2 + 0.1} + \sqrt{(r_o - 1)^2 + 0.1}}{\sqrt{(r_o + 1)^2 + 0.1} - \sqrt{(r_o - 1)^2 + 0.1}}$$

where V.S.W.R. value < 1. In this test it is assumed that the V.S.W.R. is high at frequencies remote from resonance, and is not less than 25 db.

ALTERNATIVELY. Values of V.S.W.R. shall be obtained from the V.S.W.R/frequency characteristic at the resonant point (f_o) and also at two frequencies on either side and equally displaced from the resonant frequency where the V.S.W.R. is within the range 0.5 to 0.6. The value of loaded Q shall be obtained from:

$$Q_L = \frac{fo}{\delta f} \frac{\sqrt{(1 - r_o r)\ (r_o - r)}}{(1 + r_o)\ \sqrt{r}}$$

where r = V.S.W.R. $\pm \frac{\delta f}{2}$ from f_o

5.H.4.1.8.1.2. T.B. Cells The loaded Q can be defined in terms of rate of change of susceptance with frequency, and may be expressed as

$$Q_L = \frac{fo \frac{\frac{dB}{Yo}}{df}}{2\left(1 + \frac{G}{Yo}\right)} = \frac{fo \frac{db}{df}}{2(1 + g)}$$

where fo = resonant frequency.
df = $f_1 - f_2$

$\frac{B}{Yo}$ = b = normalised susceptance of cell.

$\frac{G}{Yo}$ = g = normalised conductance of cell.

Since fo should be within the tolerance limits of the reference frequency, the reference frequency shall always be employed in place of fo in the above equation. The quantity $\frac{db}{df}$ (rate of change of susceptance with frequency) in the vicinity of fo can be determined by the measurement of b at two frequencies near fo and a linear relationship assumed between b and f. The linear relationship may be assumed for any frequencies within 1 per cent of fo. If the conductance and susceptance of the cell has been determined as given in section 5.H.4.1.7. $\frac{db}{df}$ may be computed from the V.S.W.R/frequency characteristic. An alternative method for the determination of $\frac{db}{df}$ involves the measurement in front of the cell of the rate of change of the phase of the standing wave minimum with frequency; then

$$\frac{db}{df} = \frac{2\pi}{2g}(1 + 2g)\frac{d\Theta}{df}$$

where λg = guide wavelength at reference frequency.

g = normalised conductance of the cell.

$\frac{d\Theta}{df}$ = rate of change of phase of voltage standing wave before the cell with frequency.

$\frac{d\Theta}{df}$ must be determined at the voltage maximum close to the plane of symmetry of the cell. Since it is not usually possible to take measurements at this point, the impedances obtained at a remote point must be transformed to the correct position. The correct values can be determined from

$$\frac{d\Theta}{df} = \frac{d\Theta^1}{df} - \frac{m}{4} \cdot \frac{d\lambda g}{df}$$

where $\frac{d\Theta^1}{df}$ = measured slope of the line obtained by plotting the observed position of a voltage minimum as a function of frequency.

m = odd number of quarter wavelengths measured, at resonance, from the reference minimum to the plane of symmetry of the cell. For the determination of $\frac{d\Theta}{df}$, frequencies within 1 per cent of fo should be used.
During this test the R.F. signal source and the terminating load shall be matched.

5.H.4.1.8.2. Unloaded Q.

5.H.4.1.8.2.1. High Q External Cavity

The cell shall be inserted in a transmission circuit between a matched signal generator and matched detector. The signal generator shall be tuned to the resonant frequency. The resonant wavelength (λR) and relative value of power received by the detector (Pd) shall be measured.
The frequency of the signal generator shall then be varied above and below the resonant frequency until in each case the transmitted power indicated by the detector is reduced to the half power points. The wavelengths at which the lower levels are obtained are recorded (λ_1, λ_2). The power available at the detector (P_a) is found by removing the cell and associated cavity from the circuit. The unloaded Q of the cell and cavity can be obtained from

$$Q = \frac{\lambda R}{(\lambda_1 - \lambda_2)(1 - \sqrt{T})} \quad \text{where } T = \frac{Pd}{Pa}$$

The equation assumes that the input and output coupling of the cavity are identical. This may be checked by measuring the V.S.W.R. with the cavity reversed in position so that the former output coupling is used as an input coupling. If the V.S.W.R. in the original position is denoted r_1 and the V.S.W.R. in the reversed position as r_2, then $r_1 = r_2$ if coupling identical. Otherwise the expression for Q becomes.

$$Q = \frac{\lambda R}{(\lambda_1 - \lambda_2)} \cdot \frac{1 + r_1 r_2 + r_1 + r_2}{r_1 r_2 - 1}$$

Alternatively. The unloaded Q may be obtained using the V.S.W.R. obtained at resonance. If the cavity is under-coupled, i.e. the shunt conductance is greater than unity, then

$$Q = Q_L \frac{1 + 2}{r_R} = \frac{\lambda_R}{(\lambda_1 - \lambda_2)} \cdot \frac{1 + 2}{r_R}$$

or if the cavity is overcoupled, i.e. when the shunt conductance is then less than unity.

$$Q = Q_L (1 + 2r_R) = \frac{\lambda_R (1 + 2r_R)}{(\lambda_1 - \lambda_2)}$$

5.H.4.1.8.2.2. Relative Method. The cell shall be tested on a relative basis by comparing the reading of the output indicator at resonance with the reading for a cell whose unloaded Q is known. There shall be at least 10 db attenuation between the test cavity and the signal generator. The equipment used in this method shall be calibrated at intervals, not to exceed 30 (thirty) days by means of cells which have passed the unloaded Q as measured in 5.H.4.8.2.1.

5.H.4.1.8.2.3. Primer Interaction (ΔQ). The primer discharge causes an increase in the effective shunt conductance across a T.R. cavity. Since the unloaded Q is a function of the power loss in the cavity, primer interaction can be interpreted as the change in unloaded Q due to primer discharge. The primer current shall be adjusted to the specified value and the change in unloaded Q as measured in 5.H.4.1.8.2.2. shall be obtained.

5.H.4.1.9. Mode Purity (T.B. Cell) Spurious modes can be excited due to the differences between the dimensions of T.B. cell and its mount, and the dimensions of the waveguide. These modes result in low values of V.S.W.R. being obtained at those frequencies. The cell shall be inserted in the specified T. junction mount and connected as shown in Fig.(5H/5) between a matched signal generator and a matched load. No appreciable energy shall be excited in the cell cavity other than the desired mode. The V.S.W.R. looking into the cell shall be measured over the specified frequency band. The standing wave measurements shall be made using the variable calibrated attenuator.

5.H.4.1.10 Electrical Length (T.R. Cell) The electrical length shall be measured by one of the two following methods.

Method I. The cell shall be inserted in a circuit as shown in Fig. (5H/6a) or in an equivalent approved circuit. The signal generator shall be tuned to the specified frequency and the amplitude of the two signals incident upon the slotted line adjusted to be equal. A minimum in the standing wave

pattern shall be located. The cell shall then be replaced by a section of waveguide having the same physical length. The change in position of the minimum ($\Delta\ell$) in the standing wave pattern shall be measured. The electrical length is given by $L + 2\Delta\ell$, where L is the electrical length of the substituted waveguide of similar physical length.

Method II The cell shall be inserted in a circuit as shown in Fig.(5H/6) with the matched load behind the cell replaced by a metallic short circuit at the output flange of the cell. The signal generator shall be tuned to the reference frequency and the short circuit plunger adjusted to give minimum output indication in the detector. The change in position ($\Delta\ell$) of the variable short circuit plunger to give a minimum output in the detector on replacing the cell by a section of specified waveguide having the same physical length and short circuited at its output flange, shall be measured. The electrical length of the cell is given by $L + \Delta\ell$ where L is the electrical length of the dummy waveguide having the same physical length.

5.H.4.2. High Level Tests

5.H.4.2.1. Firing Time (T.B. Cell). This test shall be done before any other high level test. The cell shall be inserted in the specified mount and connected to the main transmission line which shall be terminated by an approved load. The R.F. power shall be adjusted to the specified test conditions and the time required for the cell to fire after the application of the R.F. power shall be measured.

5.H.4.2.2. Arc Loss (T.B.Cells). The cell shall be inserted in the specified mount and connected in the circuit shown in Fig. (5H/7). The R.F. power (Ps) shall be adjusted to the specified test conditions and the power output indicated on the detector shall be measured. The cell shall then be replaced by a metallic short circuit and the power output (P_t) again recorded. The arc loss in dB is then given as

$$10 \log \frac{P_s}{P_t}$$

5.H.4.2.3. High Level V.S.W.R. (T.B.Cell) The cell shall be fitted in the specified mount and connected in a circuit equivalent to that shown in Fig. (5H/8). The R.F. power in the main line shall be adjusted to the conditions specified. With a load whose V.S.W.R. is better than or equal to the specified value, the V.S.W.R. immediately before the cell shall be measured.

5.H.4.2.4. Leakage Measurements (See 5.H.2.13)

5.H.4.2.4.1. Total Leakage Power. The cell shall be fitted in the specified mount and connected as shown in the circuit given in (Fig. 5H/9). The cell operating conditions shall be as specified. The R.F. power in the main line shall be adjusted to the specified conditions and the leakage power shall be measured on the matched power detector. For the purpose of this test the leakage pulse shall be deemed to have the same

pulse width as the R.F. power pulse and the peak leakage power shall be computed from

$$\text{Peak Leakage Power} = \frac{\text{Average Leakage Power}}{\text{P.R.F. x R.F. pulse width}}$$

5.H.4.2.4.2. Spike Leakage energy

5.H.4.2.4.2.1. Narrow Band Cell. The cell shall be fitted in the specified mount and connected as in 5.H.4.2.4. The specified primer current shall be applied and the R.F. power in the main line adjusted for the specified test conditions. The average leakage power shall be measured at each of the two specified pulse widths Tp1 and Tp2. The spike leakage energy (W_s) shall be calculated from

$$W_s = \frac{10^7}{\text{P.R.F.}} \left(P_1 - \frac{(P_1 - P_2)\,Tp1}{(Tp1 - Tp2)} \right)$$

Where W_s = Spike leakage energy in ergs per pulse.

P_1 = Average power reading at Tp1 (watts)

and P_2 = Average power reading at Tp2 (watts)

5.H.4.2.4.2.2. Broad band cell. The test contained in 5.H.4.2.4.2.1. may provide an inaccurate value for spike leakage due to the possible occurrence of a region of very low coupled power between the spike and flat leakage areas. The cell shall be connected as given in 5.H.4.2.4.2.1. and the shorter pulse reduced in width to between 0.05 μ sec and 0.15 μ sec. duration or as specified. The leakage energy shall be measured during the reduced short pulse only. This measured value shall be considered to be solely spike energy.

Thus $W_s = \frac{10^7}{\text{P.R.F.}} P.$

Where W_s = Spike leakage energy in ergs per pulse.

P = Average measured leakage power in watts.

5.H.4.2.4.3. Flat Leakage Power. The flat leakage power (P_f) shall be determined from the power readings obtained in the spike leakage test (5.H.4.2.4.2.) and calculated from

$$P_f = \frac{(P_1 - P_2)}{\text{P.R.F. } (Tp1 - Tp2)} \text{ Peak Watts}$$

In the case of broad band cells the flat leakage power obtained as above will be inaccurate unless the shorter pulse is increased in width to include the beginning of the flat region of the leakage characteristic.

5.H.4.2.4.4. Low Power Leakage. (Broad band T.R.Cells) The cell shall be fitted in an approved mount and connected in the circuit shown in Fig.(5H/10). The operating conditions shall be adjusted as specified. Commencing at the lower specified power level the power shall be raised to the higher specified power level. The maximum value of leakage power indicated shall be recorded.

5.H.4.2.5. Recovery Time. Care must be exercised to ensure that R.F. break-through power does not saturate the amplifier and so introduce possible error in the measurement of recovery time due to the recovery period of the amplifier circuits.

5.H.4.2.5.1. Constant Attenuation. The cell shall be fitted in an approved mount and connected as shown in the circuit of Fig.(5H/11). The cell shall be tuned to the reference frequency and the primer current adjusted to the specified value. The R.F. power in the main line shall be adjusted as specified. A low level pulse modulated signal (simulating received echo at the reference R.F. frequency) which is synchronised with the high power R.F. transmitted pulse via a variable delay trigger unit, shall be introduced into the main line through a suitable coupling device. The power transmitted through the cell shall be amplified and the output applied to the vertical deflection plates of a suitable monitor whose horizontal sweep is synchronised with the transmitter modulator. As the low level signal is varied in time with respect to the transmitted pulse, the variation of low level signal amplitude indicated on the monitor shall be observed. Comparison of attenuation shall be made with respect to the amplitude of the low level signal obtained when the time delay after the R.F. high power pulse is of such a large proportion of the pulse repetition period that the cell can be considered as completely recovered to the state which existed prior to the transmitter pulse. Alternatively by using the fixed delay in the transmitter modulator trigger circuit the low level signal shall be made to appear before the transmitter pulse.

The recovery time shall be measured from the trailing edge of the transmitted pulse to the front edge of the low level pulse. This measurement may for convenience be made by measuring the time delay from the front edge of the transmitter pulse and subtracting the transmitter pulse width period. The measurement of time may be made by the use of a calibrated variable delay or by the superimposition of a suitable frequency signal on the time base of the monitor.

In addition, as the low level pulse shape may be modified due to the frequency response of the amplifier the measurements concerning amplitude of pulse shall be made at the centre of the low level simulating pulse.

Alternatively. The low level simulating pulse may be replaced by a C.W. signal. This has the effect of tracing out the recovery characteristic of the cell from which measurements may be extracted and will be particularly useful in the case of cells having short recovery times.

5.H.4.2.5.2. Constant Delay. The cell shall be tested as specified in the Constant Attenuation test (5.H.4.2.5.1.) and the low level signal attenuation of the cell at the specified time following the occurrence of the transmitted pulse shall be recorded.

5.H.4.2.5.3. Pre T.R.Cells. The measurement of recovery time for the pre T.R. cell shall be made as given in the Constant Attenuation test (5.H.4.2.5.1.) If a T.R. cell is used following the pre T.R.cell, the low level signal must see a match looking into the T.R. cavity (i.e. tuned to resonance and properly loaded). If the loading cannot be adjusted, resisting padding can be used between the cells. Precautions shall be taken to ensure that the T.R. cell recovery characteristic will not effect the measurement of the pre T.R. cells recovery time. Care must be exercised to prevent crystal detector burnout by ensuring adequate attenuation is provided.

5.H.4.2.6. Attenuation Characteristic. The attenuation shall be measured as in the Recovery Time-Constant attenuation test (5.H.4.2.5.1.) Owing to the high level of this attenuation it will be necessary to use a high gain linear amplifier system having a detector output to indicate the relative power output level.

The cell shall be included in a transmission system between a matched C.W. signal generator (or square wave modulated signal generator) and a matched crystal mixer. The output from this mixer shall be amplified and passed through a calibrated attenuator to an indicator. The signal generator shall be tuned to the reference frequency and the specified operating conditions obtained. The cell shall then be tuned to resonance and the output recorded. The attenuator electrode current shall then be set to the specified value and the calibrated attenuator adjusted until the output indication returns to the original value. The db change in attenuator reading, which is equal to the signal attenuation caused by the attenuator electrode current shall be recorded.

5.H.4.2.7. Position of short. The test equipment shall be connected as shown in Fig. (5H/12). The R.F. power output from the source shall be adjusted to the specified test conditions. The cell shall be fitted into the specified mount and connected to one of the balanced arms of the magic Tee. The calibrated variable short circuit plunger shall be adjusted to give minimum reflected power in the line as indicated by a minimum in the power detector. The cell shall then be replaced by a reference short circuit and the short circuit plunger readjusted for minimum reflected power. The difference in the short circuit settings corresponds to the distance between the plane of the reference short and the effective short produced by the fired cell.

It is recommended that the position of the adjustable short circuit plunger which gives the minimum reflected power when using the reference short shall be located prior to this test using a low power source.

5.H.4.2.8. Firing Power. The cell shall be inserted in the specified mount and connected in the circuit shown in Fig.(5H/7). With all operating conditions adjusted as specified, the R.F. power incident upon the cell shall be raised from the specified low level until the cell fires. The firing of the cell will be indicated by a rapid decrease in the power recorded by the power detector in front of the load. The incident power which just causes the cell to fire shall be measured.

5.H.4.2.9. Minimum Breakdown Power. The cell shall be inserted in the specified mount and connected in the circuit given in Fig.(5H/7). With all operating conditions adjusted as specified, the R.F. power incident upon the cell shall be raised until sparks occur at the cell, in the waveguide. The power at which the sparking commences shall be recorded.

5.H.5. Environmental Tests. Tests contained in this section shall, when required by the Test Specification, be made on a statistical basis, and shall be in accordance with an approved sampling procedure. Where applicable and approved, devices which are functional rejects may be used for tests contained herein.

Cells which have been subjected to those tests considered and specified as destructive tests will not be accepted for delivery. The degree and duration of mechanical vibration, shock etc. on cells whose proposed functional use make it appropriate shall be performed in accordance with those specified in Specification SP.24 (DES.1)

5.H.5.1. Mechanical Tests. When the tests contained in this section are to be performed extreme care must be exercised in the mounting of the cell as some dimensions are critical. It is essential that sufficient clearance for projections be allowed and that the input flange is connected in the correct direction.

5.H.5.1.1. Pressure operation. The specified air pressure shall be applied to one or both windows of the cell as required for a period of 30 minutes. The pressure shall then be reduced to atmospheric pressure. After five such cycles the cell shall pass the primer ignition test (5.H.3.1.1.)

5.H.5.1.2. Vibration/Frequency Deviation. (Tuneable cells) The cell shall be tuned to resonance at the reference frequency and shall then be vibrated in the direction of the tuner axis as specified. After vibration, the tuning shall be checked and any change shall be recorded. At the conclusion of this test, the cell shall pass the specified electrical tests.

5.H.5.1.3. Vibration. The cell shall be vibrated in a plane perpendicular to the primer axis under the specified test conditions. During the test no shorting, as indicated by a continuity tester, shall be observed between the primer electrode and the adjacent cone.

5.H.5.2. Temperature Tests

5.H.5.2.1. Primer Current Temperature Drift. Using a constant voltage source, the primer current shall be adjusted to the specified value at 25°C. The ambient temperature shall be raised to 100°C in not less than 15 minutes, and the change in primer current shall be measured.

5.H.5.2.2. Frequency - Temperature Coefficient. The frequency drift of the cell over the specified temperature range shall be determined and expressed as frequency per degree centigrade. One of the following methods shall be used.

Method I The cell shall be placed in a temperature controlled chamber at room temperature and connected in a transmission circuit between a matched signal generator and matched detector. With the signal generator at the reference frequency the cell shall be tuned to resonance. The temperature shall then be reduced to $0^{o}C$ and the cell allowed to come into thermal equilibrium. The new resonant frequency shall beobtained by retuning the signal generator. The temperature shall then be raised to $100^{o}C$ in not less than 15 minutes nor exceeding 30 minutes. The cell shall be allowed to come into thermal equilibrium and the new resonant frequency determined.

Method II External Cavity. Using the signal generator to determine the resonant frequency of the cell and cavity, and the frequency-temperature coefficient shall be obtained as in Method I.

5.H.5.2.3. Temperature Cycling.

5.H.5.2.3.1. General. The cell shall be exposed to one cycle of gradual temperature variation. The specified extremes of temperature shall be maintained for not less than 15 minutes. The time of changing from one temperature extreme to the other shall not be less than 15 minutes nor exceed 30 minutes. The temperature may be allowed to come to equilibrium at room temperature on changing from one temperature to the other. At the conclusion of this temperature cycle the cell shall pass the Primer ignition time test (5.H.3.1.1.) This test may be performed before the final finishing operation.

5.H.5.2.3.2. Holding Period Test. (T.R.Cells) At the conclusion of the general temperature cycling test (5.H.5.2.3.1.) the cell shall pass the primer ignition test (5.H.3.1.1.) Not less than twenty four hours after the temperature cycling test, the cell shall again pass the primer ignition time test (5.H.3.1.1.)

5.H.5.2.3.3. Holding Period Test (T.B.Cells) After the completion of the general temperature test (5.H.5.2.3.1) the cell shall pass a firing time test (5.H.4.2.1.) The cell shall again pass the firing time test not less than twenty four hours after the general temperature cycling test.

5.H.5.3. Life Tests. The cell shall be fitted to a transmission line system and the specified R.F. power applied. Where a number of cells are being tested simultaneously, the power shall be measured immediately before the cell in front of the load. It is permitted to interchange the position of the cells if required. The primer current (if applicable) on each cell shall be as specified and no adjustment of primer current shall be made during the life test. Life test end points shall be deemed to have been reached when the cell fails to pass the specified test conditions or when the specified life period has been reached. Cells for this test shall be taken at random. Any cell which when selected fails to pass the specified test conditions for life test end point shall be excluded from the test and replaced by a good cell chosen at random.

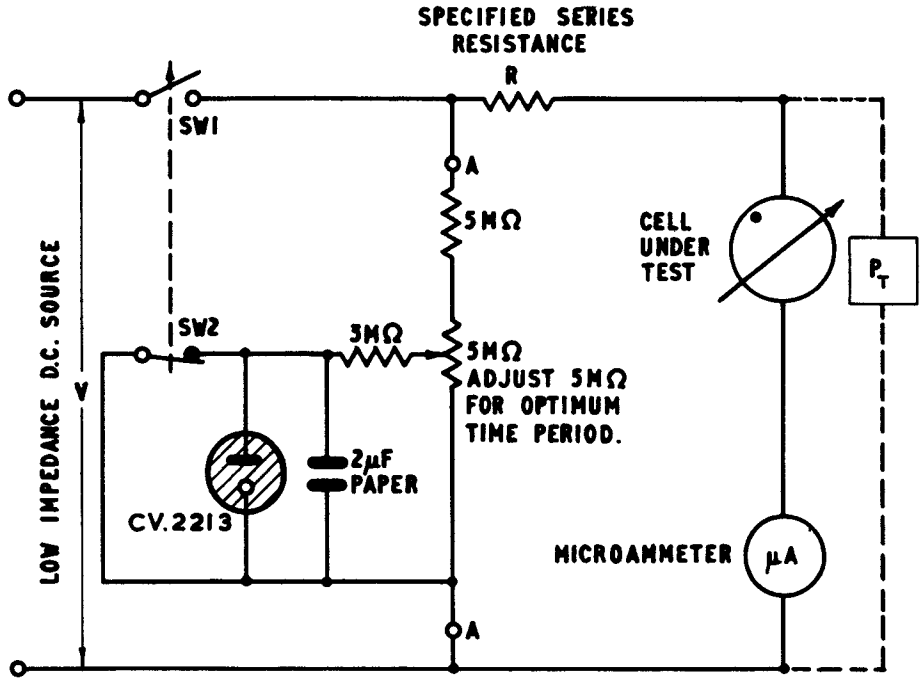

PRIMER CURRENT AND IGNITION TEST CIRCUIT

NOTE:- COUNTING CIRCUIT (BETWEEN POINTS A) MAY BE OMITTED IF ALTERNATIVE TIME MEASUREMENT IS USED.

MEASUREMENT OF PRIMER VOLTAGE

METHOD A — BY EXTERNAL POTENTIOMETER P_T CONNECTED AS DOTTED AND ADJUSTED SO THAT NO CURRENT FLOWS TO OR FROM THE PRIMER.

METHOD B — CONNECTION OF VOLTMETER ACROSS POINTS (A) AND SUBTRACTING VOLTAGE DROP ACROSS THE SERIES RESISTANCE (R x MEASURED CURRENT) FROM THE VOLTAGE READING.

5H/1

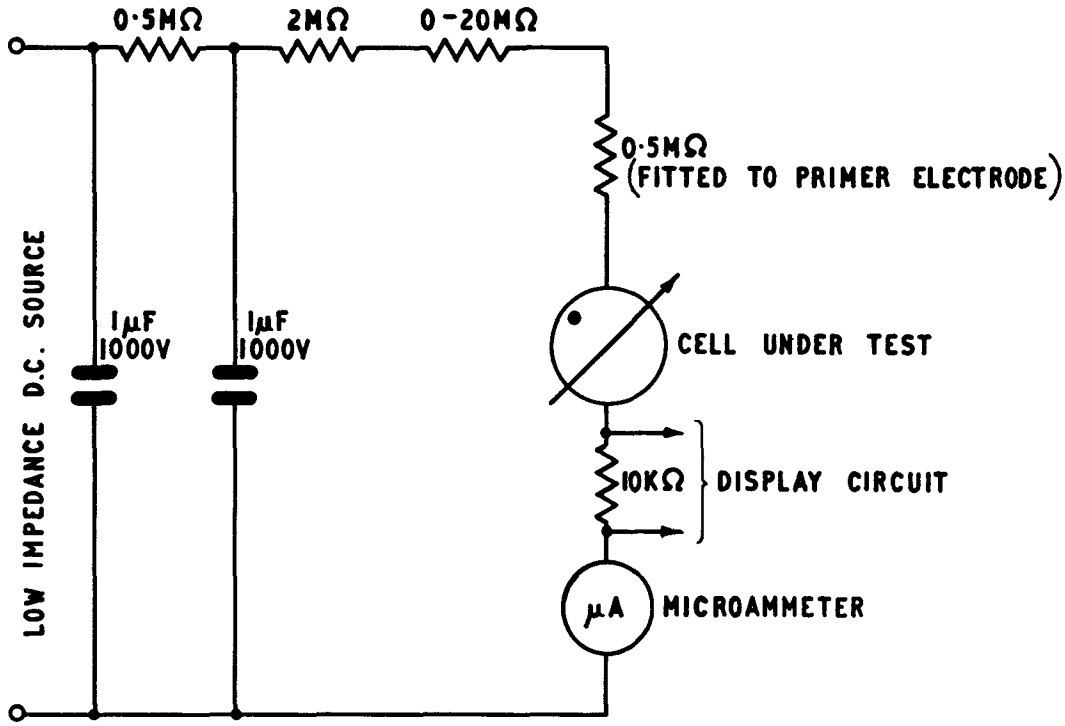

PRIMER RELAXATION TEST CIRCUIT

NOTE:- IF AMPLIFIER USED TO GIVE FULL SCREEN DEFLECTION OF OSCILLOSCOPE, THE BANDWIDTH OF SYSTEM TO 3dB POINTS SHOULD NOT BE LESS THAN 50c/s–500Kc/s WITH A SOURCE IMPEDANCE OF 10KΩ CONNECTED ACROSS THE 10KΩ MONITOR RESISTANCE.

5H/2

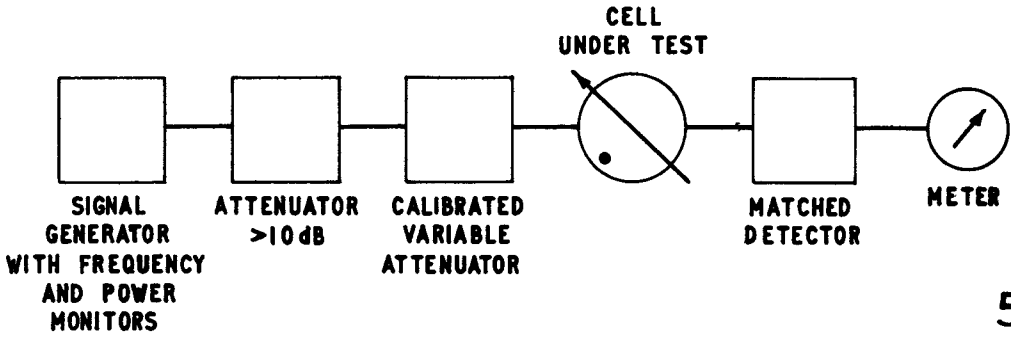

5H/3

SCHEMATIC DIAGRAM FOR TRANSMISSION SYSTEM MEASUREMENTS

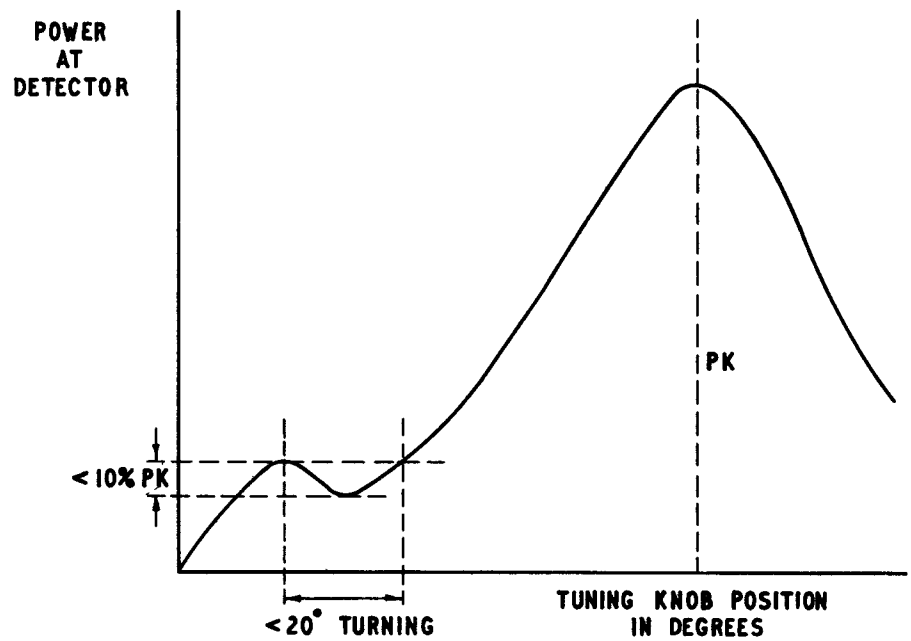

5H/4

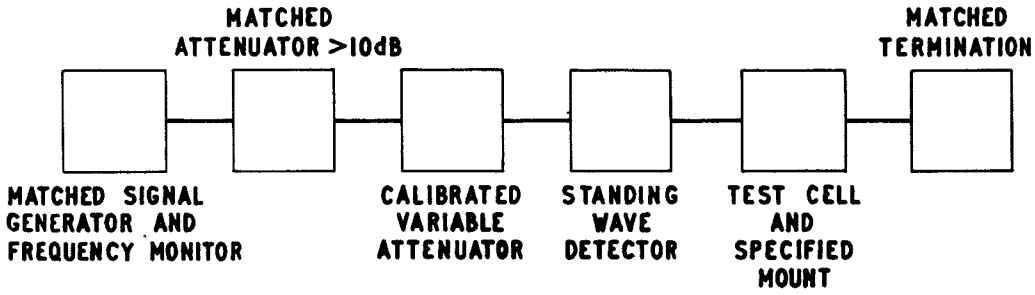
MATCHED
ATTENUATOR >10dB
MATCHED
TERMINATION
MATCHED SIGNAL
GENERATOR AND
FREQUENCY MONITOR
CALIBRATED
VARIABLE
ATTENUATOR
STANDING
WAVE
DETECTOR
TEST CELL
AND
SPECIFIED
MOUNT

5H/5

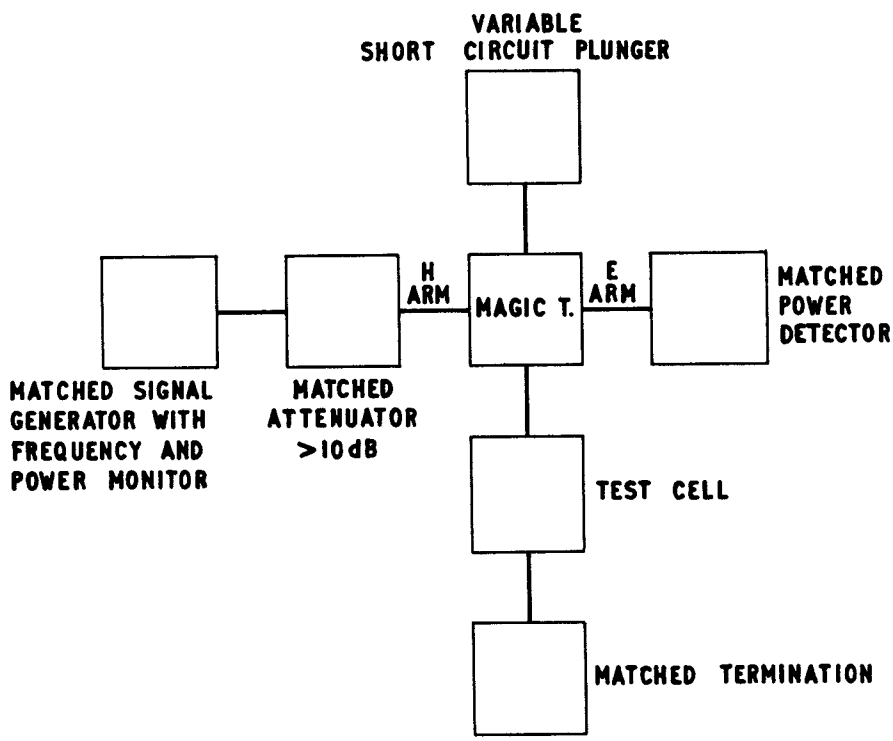
VARIABLE
SHORT CIRCUIT PLUNGER
H
ARM
MAGIC T.
E
ARM
MATCHED
POWER
DETECTOR
MATCHED SIGNAL
GENERATOR WITH
FREQUENCY AND
POWER MONITOR
MATCHED
ATTENUATOR
>10dB
TEST CELL
MATCHED TERMINATION

5H/6

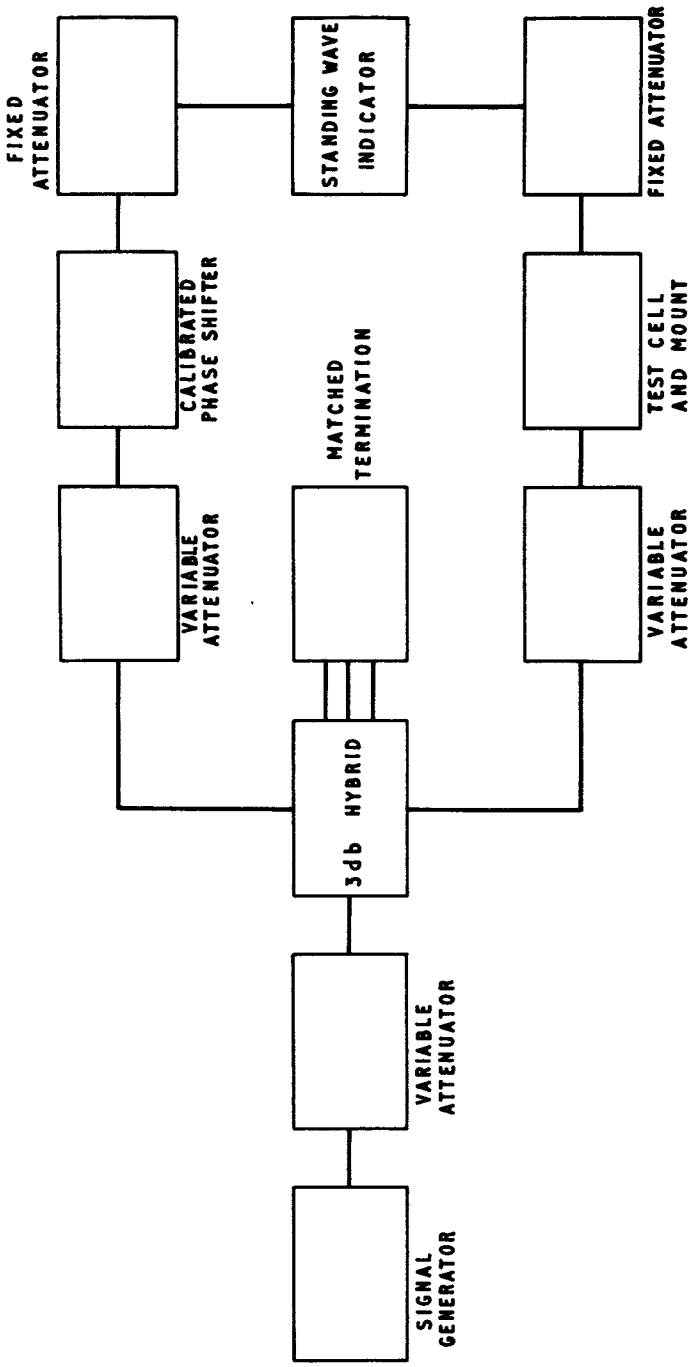
FIXED ATTENUATOR
STANDING WAVE INDICATOR
FIXED ATTENUATOR
CALIBRATED PHASE SHIFTER
MATCHED TERMINATION
TEST CELL AND MOUNT
VARIABLE ATTENUATOR
VARIABLE ATTENUATOR
3db HYBRID
VARIABLE ATTENUATOR
SIGNAL GENERATOR

5H/6A

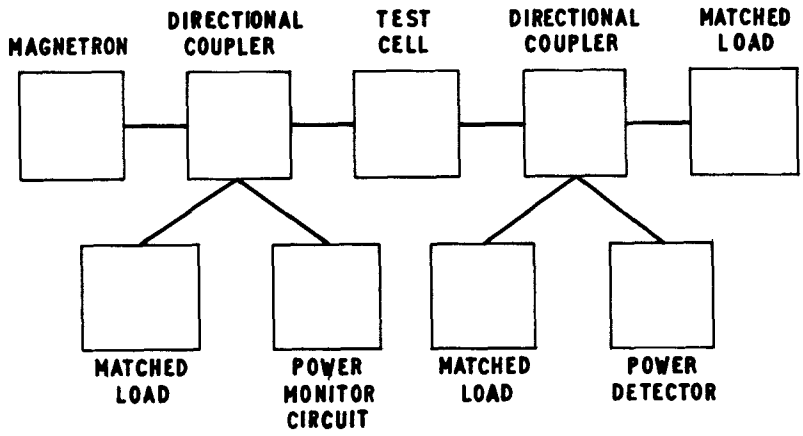
MAGNETRON
DIRECTIONAL COUPLER
TEST CELL
DIRECTIONAL COUPLER
MATCHED LOAD
MATCHED LOAD
POWER MONITOR CIRCUIT
MATCHED LOAD
POWER DETECTOR

5H/7

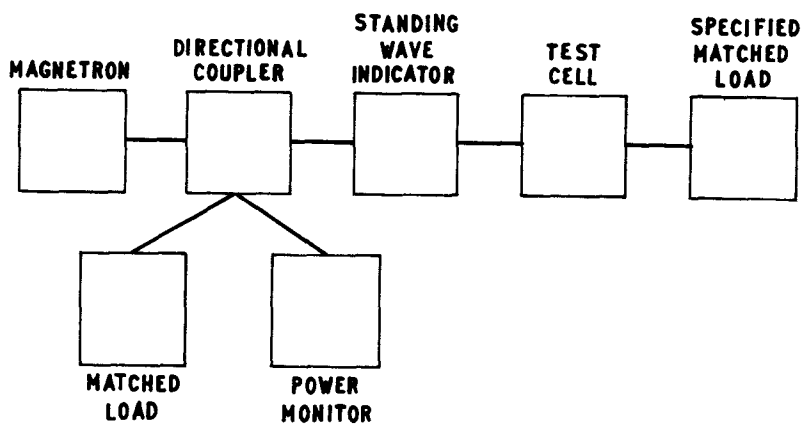
MAGNETRON
DIRECTIONAL COUPLER
STANDING WAVE INDICATOR
TEST CELL
SPECIFIED MATCHED LOAD
MATCHED LOAD
POWER MONITOR

5H/8

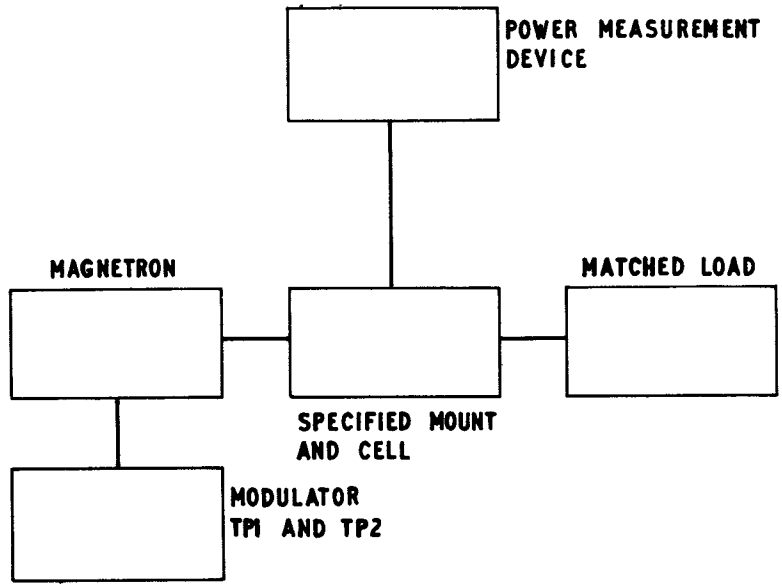

5H/9

SCHEMATIC DIAGRAM FOR LEAKAGE POWER MEASUREMENTS.

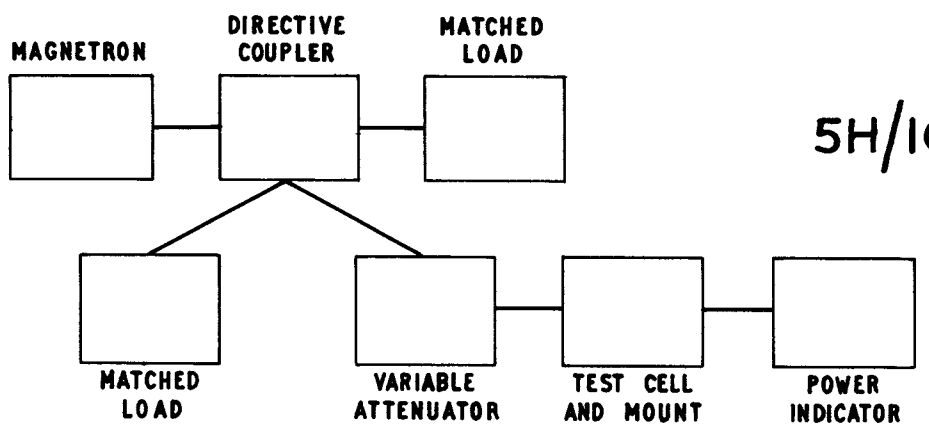

5H/10

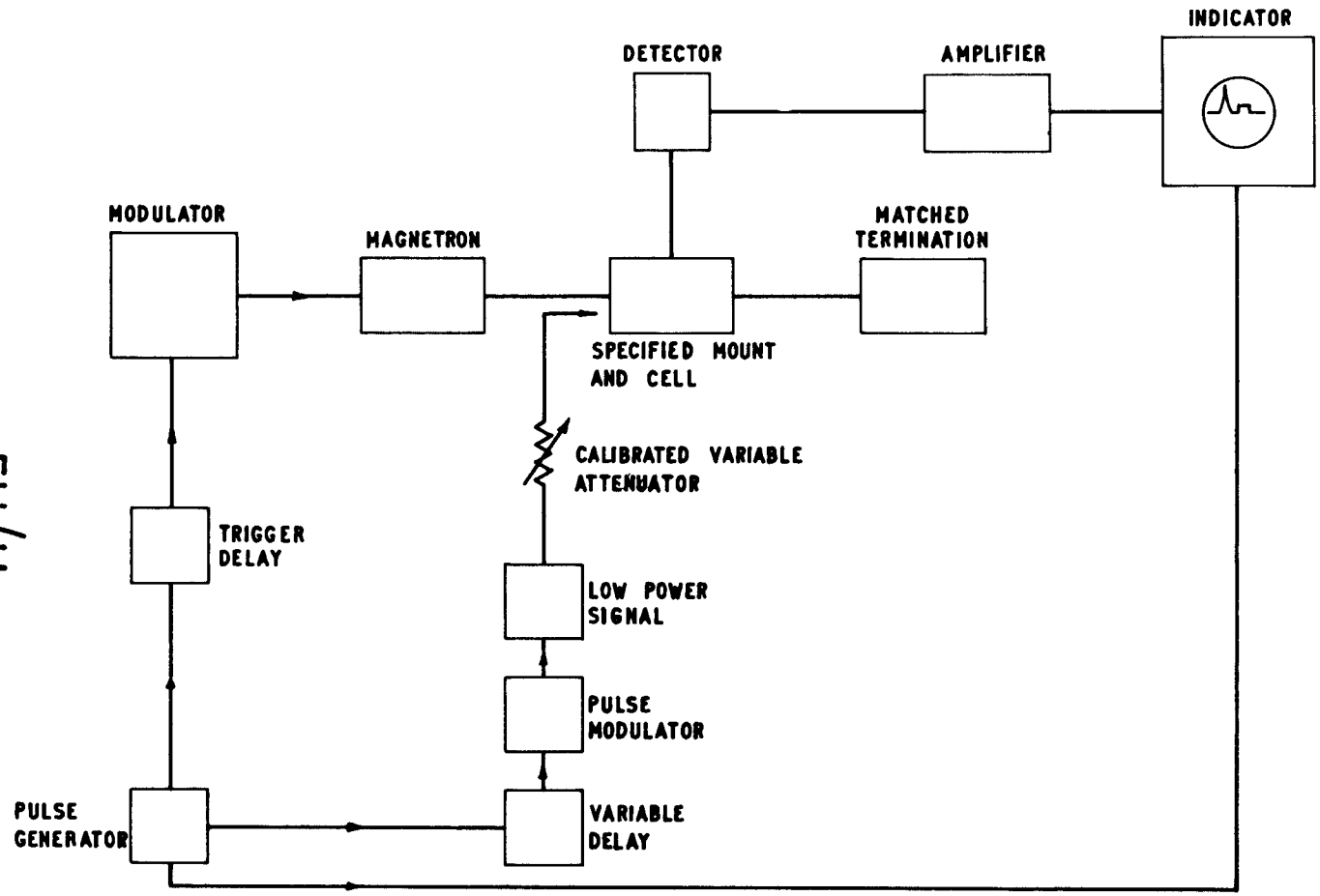

5H/11

SCHEMATIC DIAGRAM FOR RECOVERY TIME MEASUREMENTS

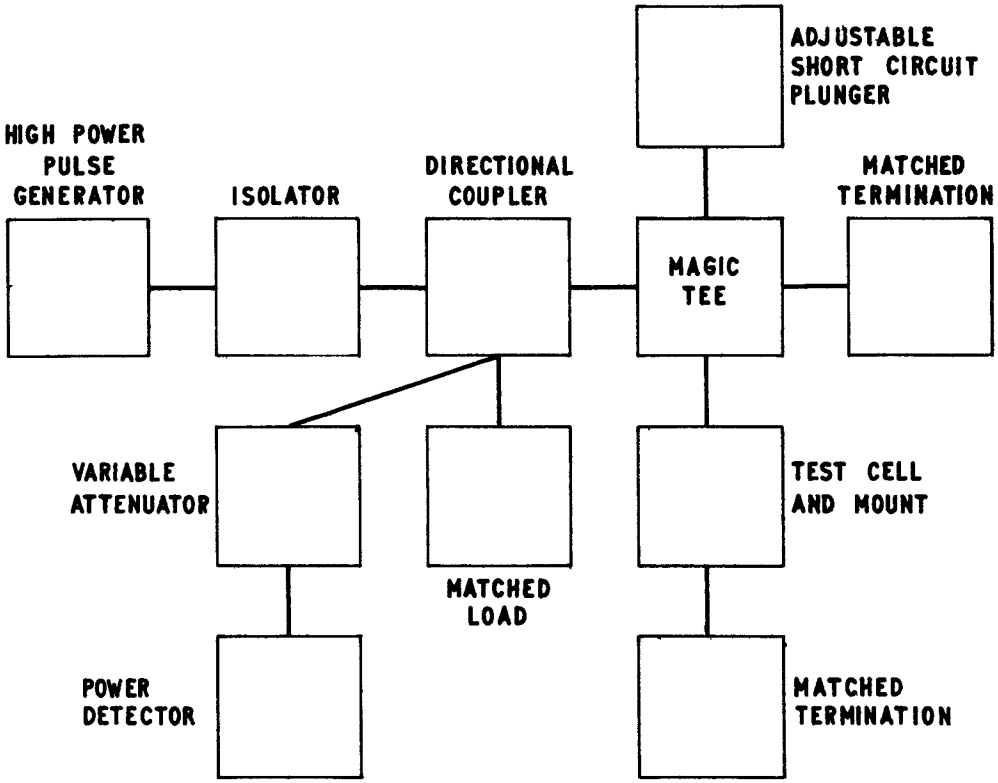
ADJUSTABLE
SHORT CIRCUIT
PLUNGER
HIGH POWER
PULSE
GENERATOR
ISOLATOR
DIRECTIONAL
COUPLER
MATCHED
TERMINATION
MAGIC
TEE
VARIABLE
ATTENUATOR
TEST CELL
AND MOUNT
MATCHED
LOAD
POWER
DETECTOR
MATCHED
TERMINATION

5H/12

(222327)

Section 5J

TRAVELLING WAVE TUBES

This section refers to forward wave, O type, travelling wave signal or power amplifiers (of output power not exceeding 100 watts, for c.w. or pulsed operation where applicable) having either permanent magnet, electromagnetic or electrostatic focussing.

The general test conditions shall apply to all valves unless otherwise specified in the test specification, but the individual tests (Section 6) contained herein shall apply as and when specified in the Test Specification. If significant differences occur between the test figures obtained by the manufacturers and those obtained at appropriate Service Establishments, the Approving Authority will provide an agreed correction for the guidance of Inspecting Officers.

1. Definitions

1.1 Valve For the purpose of this section the term "valve" in the test clauses, relates to the travelling wave tube as supplied by the manufacturer to meet the appropriate test specification.

1.1.1 Packaged. A term used to describe a valve permanently incorporating the focussing system and r.f. terminals (see Paragraph 1.13).

1.1.2 Encapsulated. A valve having an outer sleeve (capsule) integral with the travelling wave tube to protect the inner envelope from mechanical damage. This may or may not include the r.f. terminals (See Paragraph 1.13).

1.1.3 Mount. The additional focussing equipment and/or r.f. terminals necessary to operate the valve as a travelling wave amplifier but excluding the requisite power supplies.

1.2 R.F. Power Input The r.f. power that would be delivered into a matched load substituted for the r.f. input terminal (see Paragraph 1.13 below).

1.3 R.F. Power Output The r.f. power, having the same frequency as the power input, which is delivered into a matched load at the r.f. output terminal (see Paragraph 1.13 below).

1.4 Gain The ratio of r.f. power output to r.f. power input.

1.5 Small Signal Gain The gain obtained as the input level tends to zero. Unless otherwise specified this is understood to be the gain when the r.f. power output is at least 10 dB down on the specified saturated power output.

1.6 Synchronous Helix Potential The Helix potential giving maximum small signal gain at a given frequency.

1.7 Saturated Power The first maximum value of r.f. power output as the r.f. power input is increased.

1.7.1 Synchronous Saturated Power. The saturated power obtained at synchronous helix potential.

1.7.2 Working Saturated Power. The saturated power obtained either at a specified absolute value of helix potential other than synchronous or at a specified difference from synchronous helix potential, in the specified working conditions.

1.7.3 Maximum Saturated Power. The largest value of saturated power obtained by adjustment of both helix potential and power input at a given frequency.

1.8 Phase Sensitivity The change of phase of the output signal with reference to the input signal, for a specified change in electrode potentials or input signal level.

1.9 Spurious Oscillations Unwanted coherent oscillations occurring under the specified conditions.

1.10 Cold Tests Tests in which electrode voltages are not applied. (The heater may be left on unless otherwise specified).

1.11 Hot Tests Tests in which the valve is operating under specified conditions.

1.12 Cathode Pre-Heating Time The time which must elapse after the application of full heater voltage before the commencement of application of electrode voltages which result in a flow of current from the cathode.

1.13 R.F. Terminals The specified input and output connectors which may be either integral with the valve or the approved mount.

1.14 Input and Output Match The measured voltage reflection coefficient or the voltage standing wave ratio which would occur in a test section fed by a c.w. signal at a reference frequency, and terminated by the r.f. terminal (as defined in Paragraph 1.13). The test section shall consist of a straight uniform length of transmission line or waveguide, whose cross section has the dimensions specified for the r.f. terminal. Where the dimensions of the r.f. terminal are not specified the dimensions of the test section shall be equal to the nominal dimensions of the input/output of the specified waveguide coupling. In the case of an r.f. plug or socket input/output, the test section shall be terminated by an appropriate mating plug or socket.

Precautionary Note: In certain cases the reflected wave may be equal to or greater than the incident wave from the c.w. source owing to amplified reflections from within the valve. V.S.W.R. measurements are then ambiguous. The measurement of voltage reflection coefficient is, therefore, preferred and in this case the value will be equal to or greater than unity.

2. Electrode Numbering

With the exception of the Helix Collector and Cathode, all electrodes are termed grids and are numbered 1, 2, 3 according to their position relative to the cathode, the lowest number being closest to the cathode. Where two helices are equidistant from the cathode, the lower voltage helix is assigned the lower number.

3. Abbreviations and Symbols

Noise Factor (dB)	F
Gain (dB)	G
Helix Voltage	V hel
Helix Current	I hel
Collector Voltage	V col
Collector Current	I col
Grid Voltages	Vg1, Vg2, etc.
Grid Currents	Ig1, Ig2, etc.

4. Colour Code

The following code is to be used with travelling wave tubes equipped with flying leads.

Body Colour	Tracer Colour	T.W.T. Element
Black	None	Earth, or earthed elements
Yellow	None	Cathode also heater cathode lead if common
Brown	None	Heaters or filament off cathode
Brown	Yellow	Heater internally connected to cathode, if additional to cathode lead
Red	None	Collector
Orange	None	Helix 1
Orange	Green	Helix 2
Orange	Blue	Helix 3
Orange	Grey	Helix 4
Green	None	Grid 1
Blue	None	Grid 2
Grey	None	Grid 3
White	None	Grid 4
Green	Black	Grid 5
Blue	Black	Grid 6
Grey	Black	Grid 7
White	Black	Grid 8

(See Paragraph 2 for electrode numbering)

5. General Test Conditions

5.1. Frequency and Wavelength Where it is desired to convert frequency to wavelength, the value $c = 2.998 \times 10^{10}$ cm/sec. shall be used.

All frequencies shall be within 0.5% of the specified value.

5.2. Reference Point and Polarity of Voltages All voltages (except heaters) shall be specified relative to the cathode.

5.3. Test Equipment

5.3.1. Test Solenoid or Permanent Magnet Assembly. All mounts (see Paragraph 1.1.3.) shall be those specified and/or approved by the Design Authority. The use of these mounts is implicit in all tests contained in this section.

5.3.2. Mismatch. Except where a mismatch is specified, the voltage reflection coefficient of all test equipment shall not normally exceed 0.1 at the specified frequency. Where this is not practicable, the Approving Authority will provide an agreed correction for the guidance of Inspecting Officers.

5.4 Power Supplies

5.4.1. Supply Voltages. Where d.c. h.t. supply voltages are specified these shall be within ± 2% of the specified value.

5.4.2 Stability (long term variation) and Ripple (short term variation) Unless otherwise specified the various test voltages and currents shall not exceed the following:-

Helix Voltage	)	Stability better than ± 0.5%
	)	Peak to peak ripple less than 0.5%
Collector Voltage	)	Stability better than ± 2%
	)	Peak to peak ripple less than 1%
Other Grid Voltages	)	Stability better than ± 1%
	)	Peak to peak ripple less than 0.1%
Solenoid Current	)	Stability better than ± 5%
	)	Peak to peak ripple less than 2%

6. Electrical Tests

6.1 Small Signal Gain (1.5) The power gain shall be measured using one of the following methods:-

Method I. The valve shall be operated under the specified conditions in a circuit equivalent to that shown in FIGURE 1A. The switches shall provide an isolation of at least 20 dB more than the gain of the valve under test (e.g. if gain is 20 dB the cross talk ratio shall be at least -40 dB). The switches shall be turned to Position 1 and the level adjusted to give a convenient reading on the indicator. The switches shall then be turned to Position 2 and attenuation introduced to give the previous reading on the indicator. The value of attenuation introduced gives the gain of the valve under test.

NOTE: Where 2nd harmonics may affect the result the necessary precautions shall be taken.

Method II The Valve shall be operated in a circuit equivalent to that shown in FIGURE 1B. The directional couplers shall together have a coupling ratio approximately equal to the gain of the valve under test. The signal generator shall be tuned to the specified frequency or the frequency swept in time over the specified frequency band. The ratiometer output shall be monitored by means of a calibrated recorder or indicator.

Method III The valve shall be operated in a circuit equivalent to that shown in FIGURE 1C. The calibrated attenuator and the phase shifter shall be adjusted to provide a null reading on the indicator. The valve shall then be replaced by a section of transmission line and the attenuator and phase shifter re-adjusted for a null reading on the indicator. The value of attenuation introduced gives the gain of the valve under test.

6.2 High Level Gain. The valve shall be operated under the specified conditions in a circuit equivalent to FIGURE 2. The gain of the valve under test shall be calculated from the readings of input and output power monitors, and the value recorded.

6.3 Spurious Oscillations. The valve shall be operated under the specified conditions in a circuit equivalent to Figure 3.

The Directional couplers shall couple less than 10% of the power in the main arm and the receiving system shall have the specified sensitivity and bandwidth. The helix potential shall be swept over the specified range.

One of the shorting plungers shall be adjusted in fixed steps and the noise output observed whilst varying the other shorting plunger. The onset of oscillations will be observed as a marked change in noise level.

6.4 Noise Factor. The Noise Factor shall be measured by one of the following methods, using the Noise Source specified. Methods I and II may be used for noise factors up to 25 dB, but for greater accuracy Methods III and IV are recommended for noise factors greater than 15 dB. The v.s.w.r. of the noise source shall be not greater than 1.2 with noise source on or off. The bandwidth of the receiver shall be less than 10% of the operating bandwidth of the valve under test. Double sideband may be used provided the intermediate frequency does not exceed 2% of the operating frequency. The symbols used in the equations contained in 6.4.1 are as follows:-

n = Excess noise power of the noise source expressed as a power ratio $\frac{T - To}{To}$

Where T = effective absolute temperature of noise source

To = $290^{\circ}K$

x = Reading of Attenuator A expressed as a power ratio greater than 1

y = Reading of Attenuator B expressed as a power ratio greater than 1

f = Noise Factor of valve under test expressed as a power ratio greater than 1

f' = Noise Factor of receiver expressed as a power ratio greater than 1

g = Gain of Valve under test expressed as a power ratio.

6.4.1 Noise Factor Methods of Measurement

Method I The valve shall be operated in a circuit equivalent to Figure 4(A). The noise source shall be switched off and the receiver output noted with attenuator B set to 0 dB. The noise source shall then be switched on, attenuator B set to give 3 dB attenuation and attenuator A adjusted to keep the receiver output constant. The reading of attenuator A shall be recorded. Then

$$f = \frac{n}{x} \qquad (1)$$

For the measurement of noise factors greater than n, attenuator B shall be set to a value lower than 3 dB.

Then $$f = \frac{n}{x(y - 1)} \qquad (2)$$

Alternatively, attenuator A may be omitted. The noise source shall be switched off and the receiver output noted with attenuator B set to 0 dB. The noise source shall then be switched on and attenuator B adjusted to keep the receiver output constant. The reading of attenuator B shall be recorded. Then

$$f = \frac{n}{y - 1} \qquad (3)$$

Method II This is basically Method I but using an I.F. attenuator.

The valve shall be operated in a circuit equivalent to Figure 4(B). The appropriate procedure stated in Method I shall then be followed.

The general equation, equivalent to equation 2 above is then:-

$$f = \frac{n}{x(y - 1)} - \frac{f' - 1}{g} \qquad (4)$$

Method III The valve shall be operated under the specified conditions in a circuit equivalent to Figure 4(C). With the noise source on, the switch shall be turned to Position 1 and the receiver output noted. The switch shall then be turned to Position 2 and the attenuator A adjusted to keep the receiver output constant. The reading of attenuator A shall be recorded. Then

$$f = \frac{nx + 1}{g} \qquad (5)$$

Method IV Alternatively, the low noise methods specified in Methods I and II may be used in conjunction with a suitable amplifier to increase the output of the noise source. In this case the excess noise, corresponding to n of equation (5) is $n' = g'(n + f'') - 1$ where g' is the gain of the amplifier used to increase the noise power and f'' its noise factor.

6.5. Cold Attenuation (1.10) The insertion loss shall be measured in a circuit equivalent to Figure 5. The electrode voltages shall not be applied. The switches shall be turned to Position 1 and the input level adjusted to give a convenient reading on the indicator. The switches shall then be turned to Position 2 and attenuation introduced to give the previous reading on the indicator. The value of attenuation introduced gives the cold attenuation of the valve under test.

NOTE: Where 2nd harmonics may affect the result the necessary precautions shall be taken.

6.6 Hot Cut-off Loss (1.11) The valve shall be operated under the specified "cut-off" conditions, and procedure of measurement stated in Paragraph 6.5 shall be applied. The maximum input shall be specified.

6.7 Cold Input Match, Cold Output Match and Hot Input Match These measurements shall be made with the valve in a circuit equivalent to Figure 6. The second harmonic filter may be required only in the case of the hot match tests. The directional couplers may be replaced by a standing wave indicator.

6.8 Hot Output Match With the valve operating under the specified conditions the hot output match shall be measured using one of the following methods as applicable. Method I usually measures the hot match at small signal conditions, while Method II can be used to measure the hot match under power conditions.

Method I This is the reflectometer method as specified for the Hot Input Match Test in Paragraph 6.7 above.

Method II This is a "ripple" pipe method. The valve shall be operated under the specified conditions in a circuit equivalent to Figure 7.

The height of the fine structure ripple observed on an oscilloscope shall be used to obtain the reflection coefficient.

A correction factor shall be applied to the reflection co-efficient to account for:-

(i) The loss in the ripple pipe (two directions)

(ii) The loss in power which occurs through the directional coupler (two directions).

The ripple pipe shall be of sufficient length to ensure that its "ripple" is distinguishable from variations in reflection. The directional coupler shall have a coupling ratio not less than 10 dB down.

Alternatively, calibration of the oscilloscope shall be effected by introducing a known mis-match at the output of the valve under test.

SCHEMATIC DIAGRAMS FOR R.F. MEASUREMENTS

SMALL SIGNAL GAIN TEST

1a 1b 1c

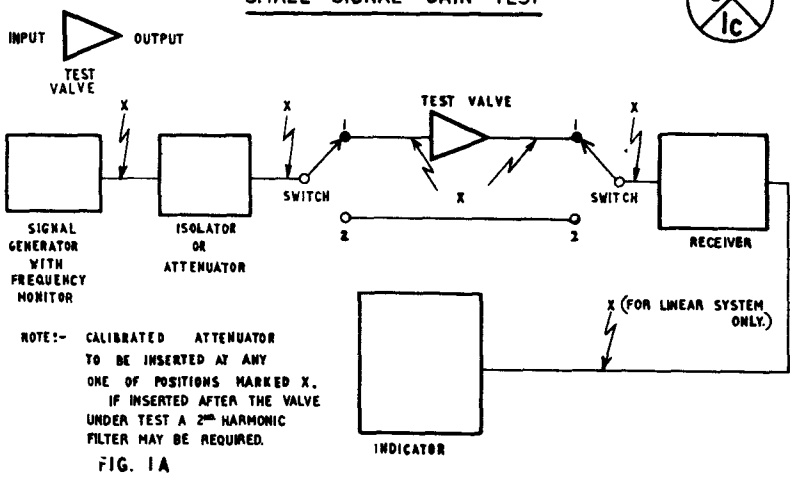

NOTE:- CALIBRATED ATTENUATOR TO BE INSERTED AT ANY ONE OF POSITIONS MARKED X. IF INSERTED AFTER THE VALVE UNDER TEST A 2ND HARMONIC FILTER MAY BE REQUIRED.

FIG. 1A

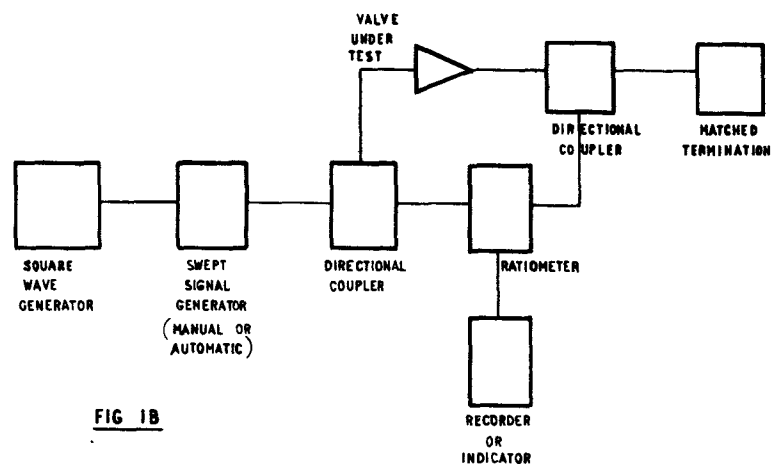

FIG 1B

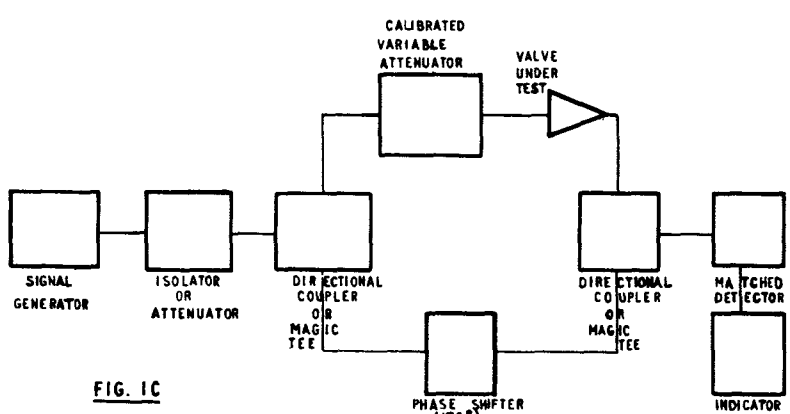

FIG. 1C

SCHEMATIC DIAGRAMS FOR R.F. MEASUREMENTS
HIGH LEVEL GAIN TEST

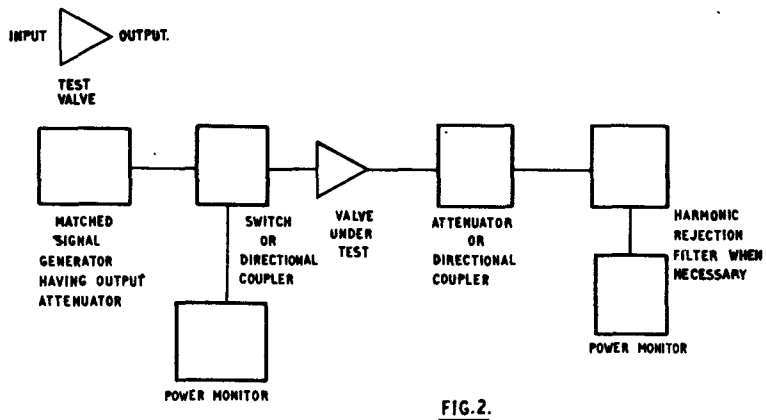

FIG.2.

SPURIOUS OSCILLATIONS TEST

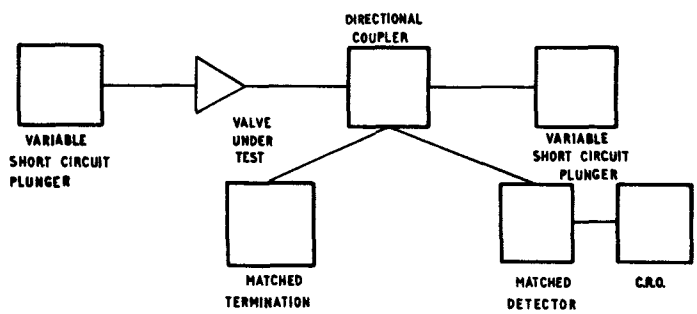

FIG. 3.

SCHEMATIC DIAGRAMS FOR R.F. MEASUREMENTS
LOW NOISE FACTOR TESTS

4a 4b 4c

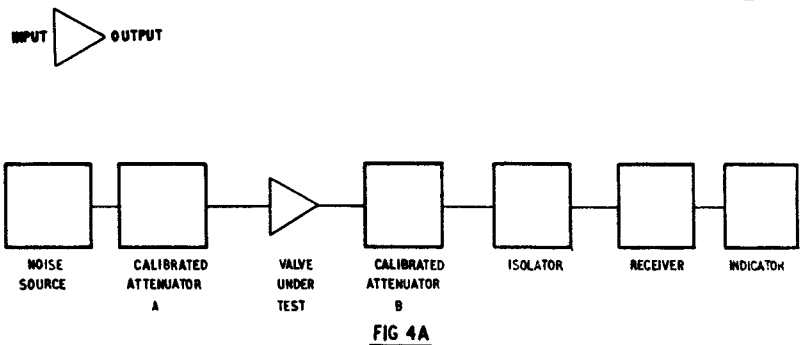

FIG 4A

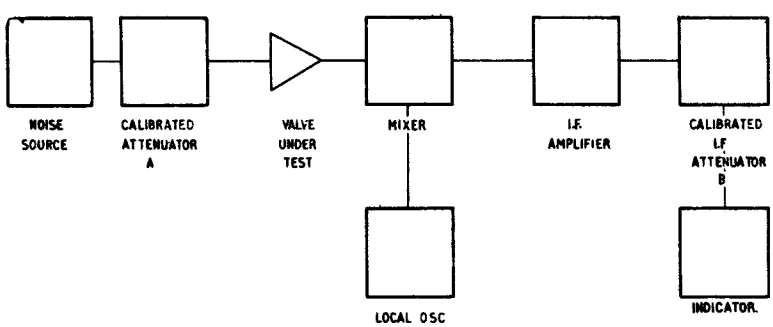

FIG. 4B

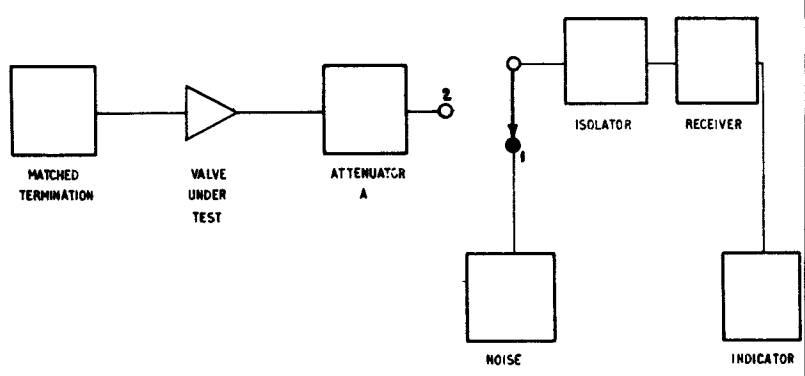

FIG. 4C

SCHEMATIC DIAGRAM FOR R.F. MEASUREMENTS.

INSERTION LOSS TEST MEASUREMENTS. 5/6

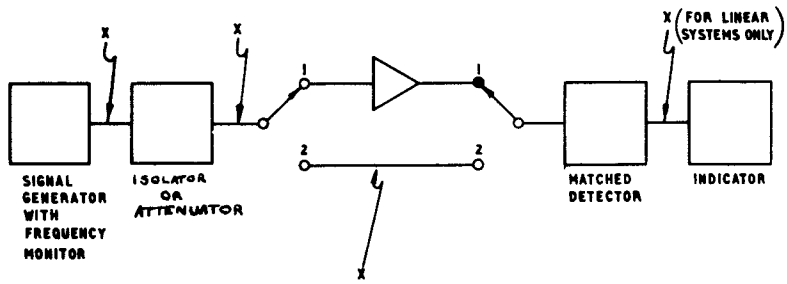

NOTE.
CALIBRATED ATTENUATOR TO BE INSERTED AT ANY ONE OF POSITIONS MARKED X.
IF INSERTED AFTER THE VALVE UNDER TEST A 2ND HARMONIC FILTER MAY BE REQUIRED.

FIG. 5.

COLD INPUT MATCH, COLD OUTPUT MATCH AND HOT INPUT MATCH TESTS.

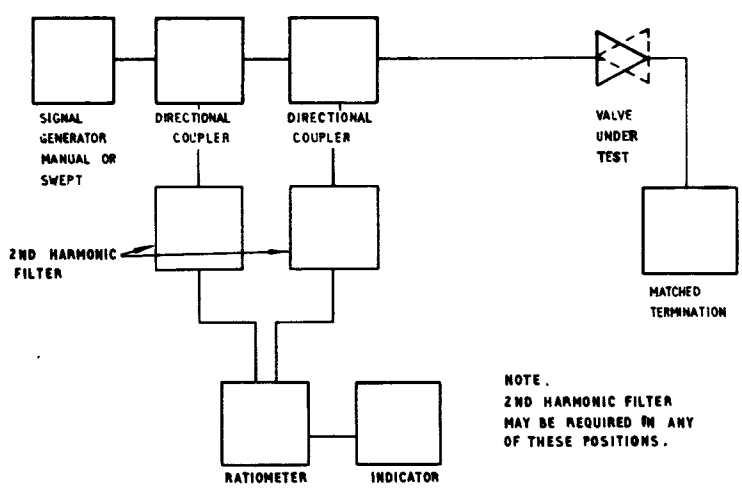

NOTE.
2ND HARMONIC FILTER MAY BE REQUIRED IN ANY OF THESE POSITIONS.

FIG. 6.

7

SCHEMATIC DIAGRAMS FOR R.F. MEASUREMENTS
HOT OUTPUT MATCH TEST

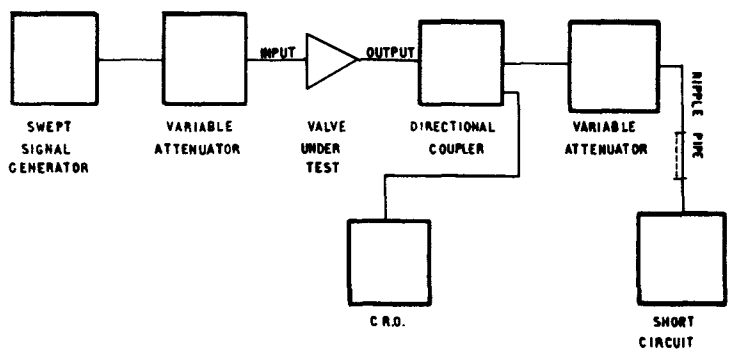

FIG. 7

Section 6

SAMPLING AND STATISTICAL TESTS

Where a Test Specification requires that inspection and acceptance for any test or group of tests shall be on a statistical basis the sampling procedure shall be in accordance with Appendix XI. Sampling Inspection will be indicated by the inclusion of an Inspection Level and an Acceptable Quality Level (AQL) in the Test Specification.

Where a manufacturer has in operation a system of quality control covering the characteristics detailed in the relevant specification, and his system and records are considered to be adequate by the Inspection Authority after consultation with the Approval Authority, these records may be accepted in lieu of all or part of the Acceptance Tests.

6.1 Test Specifications issued prior to Issue 5 of this specification or subsequently re-issued. In some Test Specifications issued before the publication of Issue 5 of K.1001 it was shewn that 100% inspection was not essential for certain tests. This was indicated by one of the following methods:-

(a) A percentage of each quantity of valves to be submitted to the Inspecting Officer, with an overriding minimum; e.g. 1% (20).

This shall now be interpreted as Inspection Level IB and AQL 6.5%. (See Appendix XI).

(b) A fixed quantity to be tested per week or month; e.g. 6 per week.

This shall now be interpreted as Inspection Level IC and AQL 6.5%. (See Appendix XI).

(c) 100% or S.

This shall now be interpreted as giving the manufacturer permission to use a Sampling Inspection plan instead of 100%. The following procedure shall apply:-

(i) Characteristic tests for Ih, Ih-k, Ia and gm

Inspection Level = II. AQL = 1.5%. (See Appendix XI)

(ii) Other characteristics

Inspection Level = I. AQL = 4.0%. (See Appendix XI)

6.2 Test Specifications for Normal Quality General Purpose Receiving Valves

6.2.1. Test specifications for normal quality general purpose receiving valves often specify tests to be performed at an Inspection Level of 100%. In these cases the manufacturer may with the agreement of the Inspecting and Approving Authority, apply Sampling and Statistical Testing in accordance with Appendix XI.

The tests shall be grouped (see also Appendix IX clause 2.4.1.1.) as follows:-

(a) Group A.

Reverse Grid Current and Electrode Insulation Tests. Inspection Level = 100% (alternatively these may be submitted to Group B testing).

(b) Group B.

Major Electrical Parameters. (These will be those tests not already covered in either clauses 6.1. or 6.2.(a) above. Inspection Level = II. A.Q.L. = 0.65%. A combined A.Q.L. of 1% shall also be applied to each set of four tests parameters, (or less as necessary), taken in the sequence in which they are specified.

(c) Group C.

Secondary Electrical Parameters. The Sampling specified in clause 6.1. above, applies as appropriate.

Section 7

GLASS STRAIN TESTS

(Note:- Where in Specifications dated prior to 1st January, 1954, mention is made of K1001/7.1 or K1001/7.2 these references should now be amended to read K1001/6.1).

Where the Test Specification requires that Glass Strain Tests shall be performed on valves, either at Qualification Approval or during acceptance testing, they shall be performed in accordance with one or other of the methods below:-

Sampling procedure shall be as specified in the individual specification.

7.1. Glass Envelope Strain Test

The glass bulb, but not the base, shall be immersed in boiling water at a temperature between 97°C and 100° C for 15 seconds and then immediately plunged into ice-cold water for 5 seconds. The volume of water shall be large enough to ensure that the temperature of the water shall not be appreciably affected by the test. The glass bulb shall not crack or break. For all-glass valves the entire valve shall be submerged.

7.2. Base Strain Test for Pinned Miniature Valves

This test shall be performed on a sampling basis. The test shall consist of forcing the pins of the valve over the specified cone and then completely submerging the valve and cone in boiling water for a specified time. Any defects resulting from glass strain shall be noted and classified separately into groups as follows:

Group	Defect
A	Bulb and/or tip cracks
B	Base cracks
C	Seal cracks

7.2.1. Equipment

7.2.1.1. Holders

The holders for the valves shall be spaced so that the valves do not touch one another. A minimum of six holes of three-eighths inch diameter shall be drilled in the plate for the holders

7.2.1.2. Container for Boiling Water

The container shall be sufficiently large so that, while the test is being made, no valve is within three-quarters inch of the retaining wall of the vessel. The container shall have a minimum capacity of two litres per fifteen valves and shall be at least three quarters full for every strain test.

7.2.1.3. Boiling Water

The boiling water shall be at a temperature between 97 °C and 100°C.

7.2.1.4. Deflection Cones

The deflection cones used for the mechanical loading of the pins by uniform deflection of the pins, shall be in accordance with Appendix X, Drawing No.1.

7.2.2. Procedure

7.2.2.1. Sampling

Unless otherwise stated in the Test Specification, the sample shall consist of thirty (30) valves taken at random from each production lot.

7.2.2.2. Testing

All valves shall be at room temperature and shall have been submitted to approved pin straightening.

(a) Align the axis of the valve with the axis of the specified deflection cone and carefully push the small end of the cone into the circle formed by the valve pins until the cone lies firmly against the valve bottom.

Note: If observation after the removal of the cone shows some pins are bent more than others, the test is being made improperly.

(b) Place the holder of valves into boiling water so that the valves and cones are completely submerged for a period of ten seconds.

(c) After the ten seconds submersion period, remove the valves from the water and allow to cool to room temperature on a wooden support.

(d) Examine the valves visually for each class of strain test failure.

7.2.3. Acceptance Requirements

A lot shall be

(a) Accepted if not more than three defectives for "A", "B" or "C" group defects respectively, or if not more that a total of four defectives are found in the sample;

or (b) Rejected if four or more defectives for "A", "B" or "C" group defects respectively, or if a total of five or more defectives are found in the sample.

Section 8

ALTERNATIVE METHODS OF TEST

Contractors may seek approval for the use of alternative methods for the tests in this specification and in the Valve Test Specifications. Such requests must demonstrate the equivalence of the proposed and the specified methods to the satisfaction of the approving Authority in consultation with the Inspection Authority.

Section 9

TEST EQUIPMENT

When the Test Specification requires tests which involves the use of equipment which has no value other than for this purpose, application may be made to the appropriate Procurement Authority for the loan of the necessary apparatus.

Section 10. CLIMATIC TESTS

Climatic Tests for electronic valves are Qualification Approval tests only, unless otherwise stated in the Test Specification.

10.1. Test Chamber. The chamber conditions in any region where valves may be placed shall be varied cyclically between 35 ± 2°C and 20 ± 5°C.

The upper temperature shall be maintained for 12 hours and the lower for a minimum of 5 hours each cycle.

The relative humidity in the chamber shall be not less than 95% at any stage of the test.

The atmosphere in the chamber shall not saturate during the 35°C period.

Saturation of the atmosphere shall take place during the cooling period and throughout the 20°C period.

10.2. Test Procedure. Valves shall be introduced into the chamber at Normal Atmospheric Conditions for test, i.e. Temperature 15°C to 35°C; Air Pressure 600 mm to 800 mm of mercury. The conditions within the chamber shall then be brought to 35°C.

One complete cycle shall be of 24 hours duration and shall consist of 12 hours at 35°C and at least 5 hours at 20°C.

These conditions will be maintained for a period of 42 days after which the valves will be removed from the chamber, have surface moisture removed and will be subjected to the following tests under Normal Atmospheric Conditions.

10.3. Tests

10.3.1. Corrosion. The valve pins and any other external metal parts shall not show corrosion such as would cause unsatisfactory operation of the valve.

10.3.2. Metal Coating. Any metal coating on the valve shall comply with Clauses 5.7.1. and 5.7.2. of this specification.

10.3.3. Insulation Resistance.

(a) Valves with Glass bases shall comply with Clause 5.2.1. or 5.2.2. of this specification. This test will be completed after one hour recovery under Normal Atmospheric Conditions.

(b) Valves other than those with glass bases shall have an insulation resistance not less than 1/10 of the value stated in Clauses 5.2.1., 5.2.2., 5.A.3.1. or the relevant Test Specification.

This test will be carried out after two hours recovery under Normal Atmospheric Conditions.

10.3.4. Electrical Characteristics. Electrical characteristics other than those detailed in Clauses 10.3.1., 10.3.2. and 10.3.3. shall not show any significant deterioration.

10.3.5 Torque and Pull Tests on Bases, Caps and Wafer Inserts. Valves fitted with cemented bases, caps, etc., shall comply with the requirements of Section 12 of this specification.

10.4 Low Temperature (Operating)

The temperature of the valve shall be reduced to a specified temperature ($-40^{o}C \pm 5^{o}C$ or $-55^{o}C \pm 5^{o}C$), measured at the mounting flange or other specified point. The valve shall be maintained at this temperature for a specified period before any voltages are applied. The Test Specification will specify the duration of the test after switching on.

10.5 High Temperature (Operating)

The temperature of the valve shall be elevated to a specified temperature ($100^{o}C \pm 5^{o}C$ or $150^{o} \pm 5^{o}C$), measured at the mounting flange or other specified point. The valve shall be maintained at this temperature for a specified period before any voltages are applied. The Test Specification will specify the duration of the test after switching on. During the test the temperature shall not fall below that specified.

10.6. Temperature Cycling

The valve shall be subjected to ten cycles of temperature variation over the range $-55^{o}C \pm 5^{o}C$ to $+ 85^{o}C, \pm 5^{o}C$, measured at the mounting flange or other specified point. The time taken in changing from one temperature extreme to the other shall not be less than one hour and the extremes of temperature shall be maintained for a minimum period of five minutes. The test may commence at any point in the cycle.

10.7 Moisture Resistance (Humidity Test)

The valve non-operating shall be subjected to the cycle shown in Fig.10.1. The duration of the test shall be ten continuous cycles.

10.8. Air Pressure Tests

10.8.1. Low Pressure

The valve shall be operated under the specified conditions in a chamber at normal room temperature. The pressure shall then be reduced to the specified value in a time not greater than three minutes, and then further reduced as specified and maintained at this pressure for a period of not less than five minutes.

10.8.2. High Pressure

A pressure of not less than 45 lbs. per sq. inch shall be applied to the valve and/or waveguide for not less than five minutes. The leakage rate shall be specified.

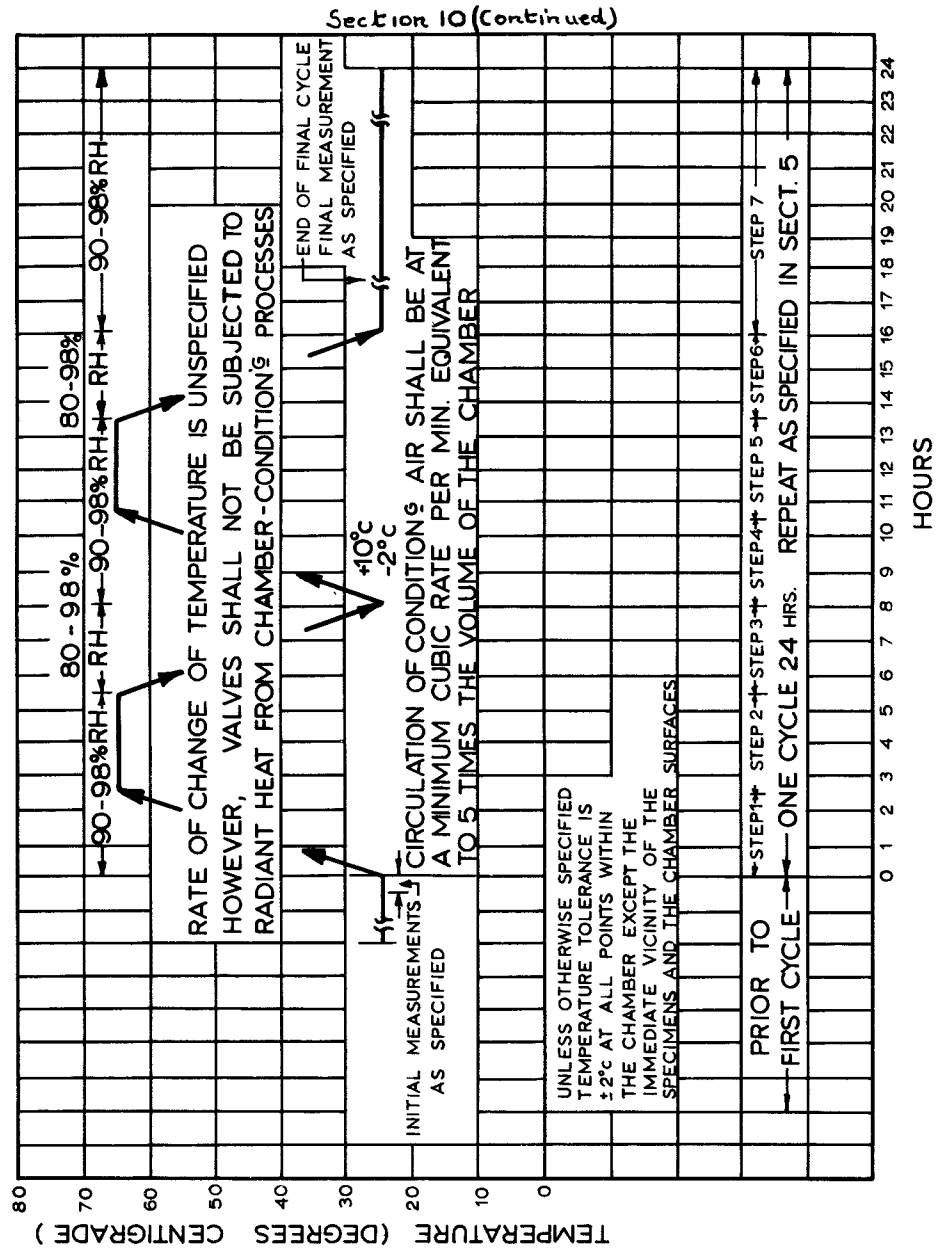

GRAPHICAL REPRESENTATION OF HUMIDITY TEST.

Fig. 10. 1

Section 11

VIBRATION, RESONANCE SEARCH, FATIGUE AND SHOCK TESTS

When required by the Test Specification tests for Vibration, Resonance Search, Fatigue and Shock shall be as follows:-

11.1. Vibration. This test shall be at a frequency of 50 c/s with a minimum acceleration of 2 g for not less than 2 minutes. Tests for Noise and Microphony may be required during or after this treatment (see Section 5, paragraph 5.8.5.). Valves which develop mechanical faults or fail the noise and microphony test shall be rejected.

11.2. Resonance Search Test. This test shall be on a sampling basis.

The valves shall be rigidly mounted on a vibration machine and vibrated at a continuously variable frequency to the limits stated in the Test Specification. The rate of change of frequency shall be:-

(i) Not exceeding one octave per minute from 25 c/s to 200 c/s

(ii) Not exceeding 100 c/s per minute between 200 c/s and 500 c/s

and (iii) Not exceeding 250 c/s per minute between 500 c/s and 2500 c/s.

Where approved high sensitivity recording equipment is being used the rate of sweep shall be not greater than 15 seconds per octave up to 200 c/s and not greater than 45 seconds per octave above 200 c/s and up to 2.5 kc/s.

The time of rise of the indicator to full scale deflection shall be not greater than one fiftieth (1/50) of the sweep time per octave up to 200 c/s and not greater than one hundred and fiftieth (1/150) of the sweep time per octave above 200 c/s and up to 2.5 kc/s.

The acceleration shall be not less than 2 g. The waveform shall be sinusoidal and have not more than 5% harmonic distortion.

The valves shall be vibrated in three mutually perpendicular planes or in a direction at approximately 45° to the three main axes of the valve.

The Test Specification will state, as required:-

(a) The limits of vibration frequency.

(b) The electrical operating conditions.

(c) The limits of noise output in each of the specified frequency bands.

and (d) The Inspection Level and AQL.

11.3. Fatigue Test. This test shall be on a sampling basis.

The valves shall be rigidly mounted on a vibration machine and shall be vibrated at a frequency not less than 100 c/s. The waveform shall be sinusoidal with not more than 5% harmonic distortion. The valves shall be vibrated in three mutually perpendicular directions successively, one of which shall be along the major axis of the valve. The Test Specification will state the minimum total time of vibration in each direction and the times during each vibration period at which the required test measurements shall be made. If desired for practical convenience the duration of vibration and the stages at which test measurements are made may exceed those specified but for the purpose of acceptance the number of rejects found at these test periods shall count as being found at the specified times.

When required the test specification will state:-

(a) The acceleration.

(b) The minimum duration of treatment.

(c) The electrical operating conditions.

(d) The tests to be performed after the fatigue treatment has been completed.

and (e) The Inspection Level and the overall AQL values.

11.4. Shock Test. This test shall be done on a sampling basis using a machine designed in accordance with Drawing No. 2, Appendix X, or other approved alternative.

11.4.1. The valve shall be mounted so that the whole of it receives the shock but the shock must not be transmitted via the base pins. Recommended methods of mounting are:-

(a) In an approved holder; see Drawing No. 3, Appendix X.

or (b) Moulded in wax contained in a strong metal container rigidly fixed to the shock table.

11.4.2. The valve shall be subjected to five blows in each of the following directions:-

(a) Across the major axis of the electrodes.

(b) Across the Minor axis of the electrodes.

(c) Towards the base.

and (d) Away from the base.

11.4.3. Valves not constructed with pinned bases shall be tested in both directions along the major axis and in two other mutually perpendicular directions.

11.4.4. The Test Specification will state:-

(a) Either the hammer angle or the minimum peak acceleration and minimum shock duration.

(b) The post shock tests.

and (c) The Inspection Level and AQL values.

11.5. Vibration Test for Cathode Ray Tubes. When the Test Specification requires that tubes be tested for the effects of vibration the test shall be done with a circular motion of 0.008 inch total amplitude applied to the base of the tube and at right angles to the major axis of the tube. The frequency shall be varied over the range 0 to 100 cycles per second. The centre of the screen of the tube shall be prevented from appreciable movement, e.g. by clamping the edge of the faceplate in suitable resilient material. The tube shall be operated at the specified electrode voltages with a circular scan pattern having a diameter not less than 75% of the screen diameter and with the focus control adjusted to give optimum line width. The tube shall be rejected if at any time during the test the apparent line width exceeds twice its initial value.

The tubes under test shall be examined visually and tested in accordance with the relevant Test Specification both before and after the vibration test and will be rejected if, after vibration, any objectionable defect is found or if any of the electrical characteristics have changed by more than a specified amount.

11.6. Heater Resonance and Fatigue. The heater supply frequency which shall be sinusoidal with a distortion not exceeding 10% shall be swept from 40 c.p.s. to 2.7 k/c.p.s. at a rate not exceeding one octave per three minutes. Mechanical resonances are defined as occurring when the output from a detector exceeds the general mean level by three times. They shall be determined with the aid of a piezo-electric transducer, the output from which shall be displayed on a C.R.O. such that the spot displacement is directly proportional to the output of the transducer. The transducer shall be screwed or clamped to the body under test and so placed as to measure maximum response and to cause minimum damping of the resonances. The frequencies of all mechanical resonances shall be noted.

The heater supply frequency shall be held at each resonance within any of the following bands for 250 hours:-

(i) 45 to 65 c.p.s.

(ii) 360 to 550 c.p.s.

(iii) 1440 to 1760 c.p.s.

(iv) 2160 to 2640 c.p.s.

(v) 700 to 900 c.p.s.

Any heater supply frequencies shall be replaced by square waves when specified.

11.7. Functional Vibration

11.7.1. Method A

The valve shall be operated under the specified conditions and mounted in an approved clamp, and subjected to vibration in each of three mutually perpendicular directions. The waveform shall be sinusoidal with less than 5% total harmonic distortion. The frequency shall be swept once up and down between the specified limits at a rate not exceeding one octave, per minute. The peak acceleration at each frequency shall not be less than that given by one of the envelope curves obtained by plotting the points in the table below on log. log. paper, and joining the points with straight lines as in Fig. 11.1 of this section:-

(i)	f.c.p.s.	10	30	5000	10000		
	g.	1	10	10	5		
(ii)	f.c.p.s.	10	30	50	5000	10000	
	g.	1	10	10	20	10	
(iii)	f.c.p.s.	10	30	50	100	5000	10000
	g.	1	10	20	30	30	15

11.7.2. Method B

The test conditions as specified in clause 11.7.1. shall apply except that the envelope curve shall be determined by plotting the points in the table below on log. log. paper, and joining the points with straight lines as in Fig. 11.2 of this section:-

(iv)	f.c.p.s.	30	5000		
	g.	10	10		
(v)	f.c.p.s.	30	50	5000	
	g.	10	20	20	
(vi)	f.c.p.s.	30	50	100	5000
	g.	10	20	30	30

11.8. Vibration Life

The test conditions as specified in clause 11.7.1. shall apply. The duration of the test shall be not less than 15 hours.

11.9. Fatigue Vibration

The valve shall be subjected to a sinusoidal vibration having a peak acceleration of not less than 3(g) at 30 c.p.s., rising to 10(g) at 100 c.p.s., and remaining at 10(g) up to 2 k c.p.s. The frequency range 30 c/s to 2000 c/s shall be swept continuously and in each direction at a rate of one octave per minute ± 10 secs. The duration of the test shall not be less than 100 hours, of which at least 30 hours shall be in each of three mutually perpendicular directions. One direction of vibration shall be along the axis to the cathode. During the test the valve shall be operated intermittently with not less than 12 interruptions in each 24 hours. A minimum 'on' period of 1 hour with an 'off' period of 15 minutes shall elapse between each interruption and the cumulative 'on time' shall be at least 20 hours out of each 24 hour period. The 'on' and 'off' periods shall consist of the immediate application and removal of the heater voltage.

11.10 Functional Shock

11.10.1. Method A

The valve shall be operated under the specified conditions and subjected to shock along each of three mutually perpendicular axes. Each shock shall have a duration of 6 to 12 milliseconds and a peak acceleration, defined such that the product of the duration in milliseconds and the acceleration in 'g' units shall not exceed 600. The rise time shall be between 0.5 and 1.0 millisecond. The valve shall receive three shocks in each of six directions.

11.10.2. Method B

The valve shall be subjected to shock in the most sensitive direction as determined by the test specified in clause 11.10.1. The test conditions specified in clause 11.10.1 shall apply, the valve shall receive three shocks.

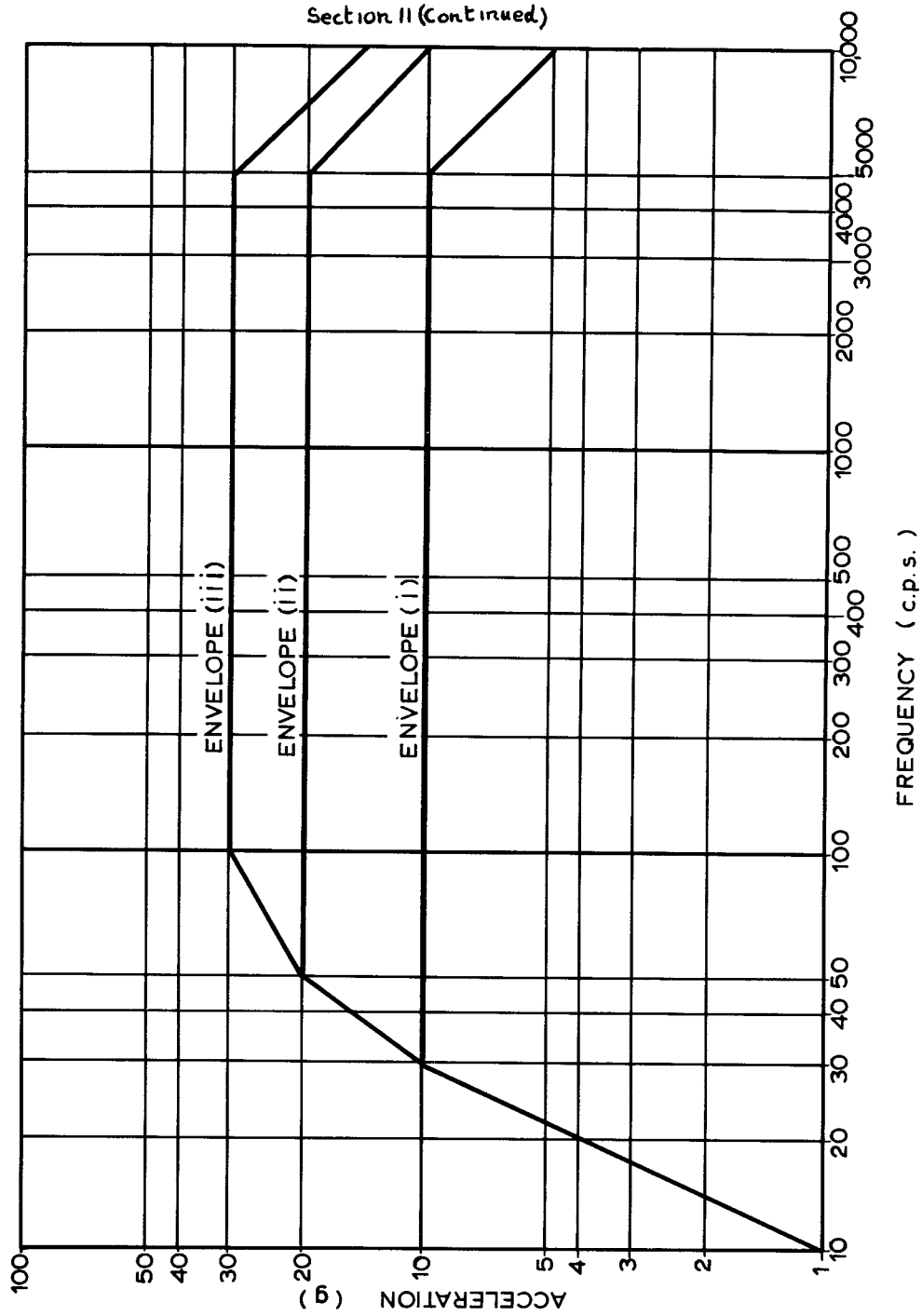

GRAPHICAL REPRESENTATION OF FUNCTIONAL VIBRATION TEST. (Para. 11.7.1)

Fig. 11.1

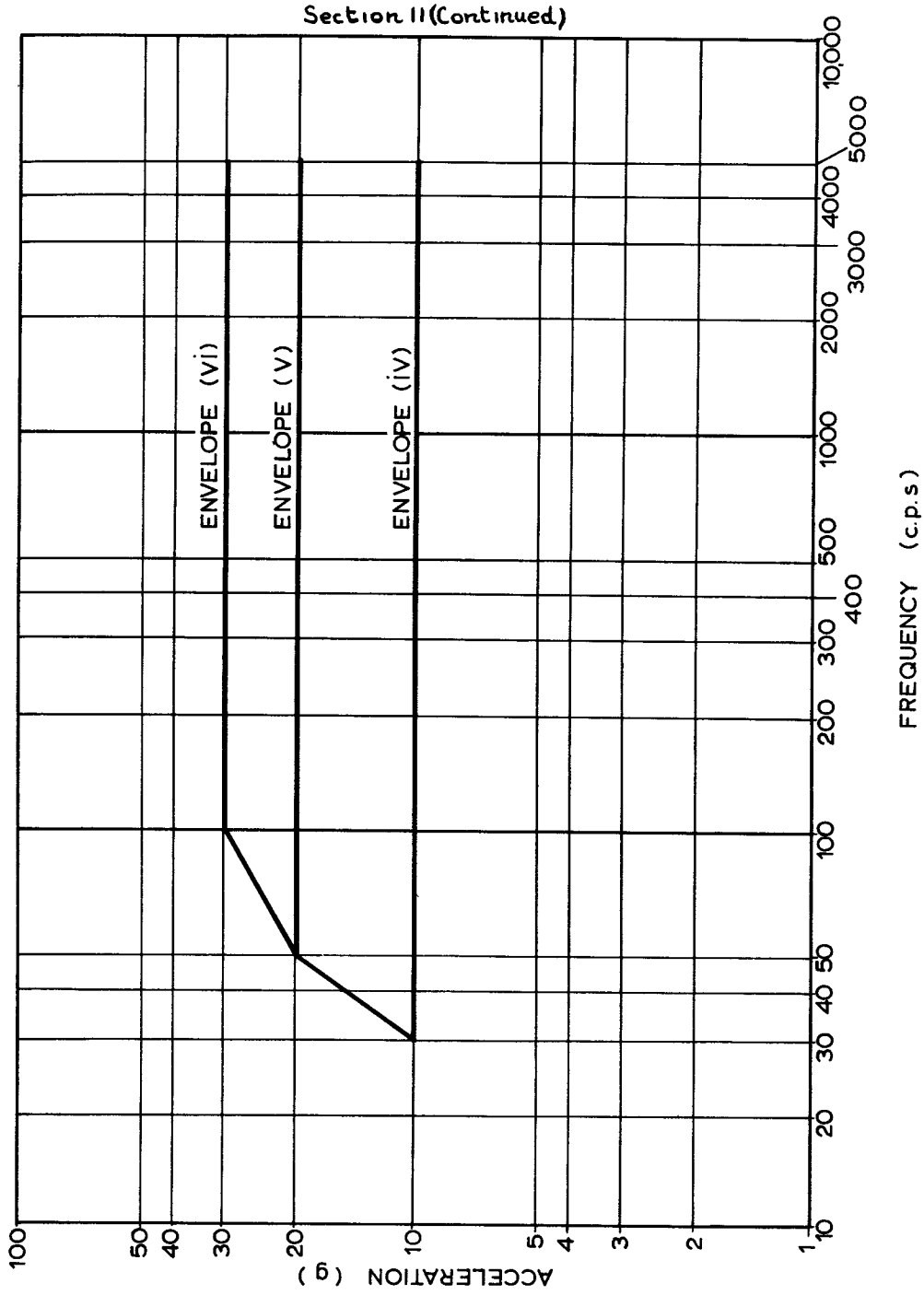

GRAPHICAL REPRESENTATION OF FUNCTIONAL VIBRATION TEST. (Para. 11.7.2)

Fig. 11. 2

Section 12

BASE AND CAP ADHESION TESTS

12.1. Assembled valves with bases or caps shall be tested for adhesion of bases, caps and inserts as specified below. At intervals of two months, ten samples, selec at random by the Inspectorate from the types listed below, shall be subjected to the following tests in the order as specified.

12.2. Torque and Pull Torque shall be applied gradually between the elements specified in accordance with Table 1. After application of torque and pull, there shall be no loosening of cemented joints or loosening by more than 1/32" movement of mechanical joints.

12.3. The valves shall be subjected to the Climatic Test, Section 10.1 and 10.2.

12.4. Torque and Pull shall be repeated after the Climatic Test.

12.5. Valves may be selected from the following types and should be mechanically sound, but failures on electrical tests may be used for this test. In the case of cathode ray tubes, necks only may be accepted for testing.

Base Only		Base and Cap	
CV 391		CV 265	
CV 394		CV 375	
CV 420	(CRT)	CV 2109	
CV 429	(CRT)	CV 2125	
CV 1530		CV 2180	
CV 2175	(CRT)	CV 2520	
CV 2244	(CRT)	CV 2659	
CV 2253		CV 2904	(CRT)
CV 2296		CV 254	(CRT)
CV 2415	(CRT)	CV 262	(CRT)
CV 2464	(CRT)	CV 464	(CRT)
CV 1868		CV 2328	(CRT)
CV 2162			
CV 2108			

12.6. These tests will normally be carried out by the manufacturer but where facilities do not exist reference should be made to the relevant Inspection Authority.

12.7. After completion of all tests the results shall be examined and details of any failures reported to the Qualification Approval Authority.

TABLE 1

Element Size	Torque	Pull
Bases having maximum overall diameter not greater than 16.5 mm	12 in. lb	
Bases having maximum overall diameter between 16.5 mm and 38 mm	20 in. lb	
Bases having maximum overall diameter greater than 38mm	40 in. lb	
Caps having maximum overall diameter not greater than 15 mm	1.5 in. lb	
Caps having maximum overall diameter greater than 15 mm	3 in. lb.	
B8G and B9G	-	35 lbs

Section 13

LIFE TESTS

13.1. Life Tests will usually be called up in individual Valve Test Specifications. Where for older specifications this is not done, it is the responsibility of the manufacturer to control the quality of his product by adequate testing whenever practicable.

However, when such life tests are not practicable the life performance shall be maintained to an agreed standard by joint Services/Manufacturer negotiation. All relevant records of life tests performed shall be available for the information of the Manufacturing, Approving and Inspection Authorities when required.

Section 14

PACKAGING

Valves shall be packed according to the requirements of Joint Service Specification K1005. The following acceptance tests shall be performed as required during packaging tests (See K1005, Section 7.)

14.1. Test for Inoperatives (see paragraph 5.14):-

(1) Discontinuities
(2) Shorts
(3) Air leaks
(4) Broken pins
(5) Loose base or caps

The methods of test for (1), (2), (3) and (5) shall be those normally used by the Manufacturer subject to the approval of the Inspection Authority.

14.2. Electrical Tests

14.2.1. Receiving Valves

TESTS

1. Anode Current
2. Screen Current and Diode Current where applicable.
3. Anode Current Cut-off. (Where this is stated in the Test Specification it is to be measured as the average change in grid voltage for a fixed current).

LIMITS

When minimum and maximum values only are given in the Test Specification, the average value of change of the referenced parameter shall not exceed ± 10% of the difference between the maximum and minimum limits.

When a bogey value is given in the Test Specification, the average value of change of the referenced parameter shall not exceed ± 20% of the difference between the bogey value and the wider limit.

When a single sided limit is given in the Test Specification, the average value of the change shall not exceed ± 10% of this limit.

14.2.2. Rectifiers

TESTS

All rectifiers shall be subjected to the Load Test as specified. On gas filled rectifiers this test shall be made at least 24 hours after the drop test.

LIMITS

Load Test: ± 5% of existing specification limit.

NOTE: Where the Peak Inverse Voltage rating exceeds 10 kV, the tolerances shall be raised from 5% to 7½%.

14.2.3. Cathode Ray Tubes

TESTS

1. Spot Centrality
2. Beam (or Anode) Current at a fixed point or alternatively - Visual Cut-off
3. Useful screen area to be fully scanned

LIMITS

1. Spot Centrality: The geometrical position of the spot shall not change by more than 50% of the total tolerance.
2. Beam (or Anode) Current, or, alternatively, Cut-off. When minimum and maximum limits are given in the Test Specification, the average value of the change shall not exceed ± 20% of the difference between the maximum and minimum values.

When a single sided limit is given in the Test Specification, the average value of change shall not exceed ± 10% of this limit.

3. Deflection Sensitivity. (Electrostatically deflected tubes only): 50% of the total tolerance.

14.2.4. Small or Medium Power Transmitting Valves

TESTS
1. Any Functional Test given in the Test Specification (ignoring the time clause).
2. If no functional test is specified, test as for receiving valves in Section 14.2.1 above.

LIMITS
1. Functional Test e.g. Power Output: ± 10% of existing specification limit.
2. As in Section 14.2.1 above.

14.2.5. Magnetrons

TESTS
1. Power Output Test
2. Frequency Pulling
3. Peak Anode Voltage
4. Frequency.

LIMITS
1. Power Output: ± 10% of existing specification limit.
2. Frequency Pulling: ± 10% of maxumum limit.
3. Peak Anode Voltage: ± 10% of existing specification limit.
4. Frequency: ± 10% of the difference between the specification limits or ± 20% of the difference between the bogey value and the wider limit.

14.2.6. Reflex Klystrons

TESTS
1. Power Output
2. Reflector Voltage
3. Tuning Range

LIMITS
1. Power Output: ± 20% of existing specification limit.
2. Reflector Voltage: ± 10% of the difference between the specification limits.
3. Tuning Range: As in the Test Specification.

14.2.7. Gas Filled Tubes

All tests to be made not less than 24 hours after the drop test.

TESTS
1. Load Test as for rectifiers
2. Striking Voltage

LIMITS
1. Load Test: as for rectifiers (See 14.2.2.)
2. Striking Voltage: ± 10% of the difference between the existing specification limits.

14.2.8. All other valves. Where the specification requires a functional test to be made this test shall be the package acceptance test.

Where no functional test is given life test conditions shall be used.

Where neither functional nor life test conditions are stated selected specification tests may be used in agreement with the Inspection Authority.

SECTION 15

QUALIFICATION APPROVAL

15.1. Before valves can be accepted to a contract for supply to the Services it is necessary for the manufacturer to obtain Qualification Approval of the design of the valve to be supplied. This condition does not apply to the valves listed in Appendix XVII. The name of the Approving Authority is given in the Test Specification. Qualification Approval given by that Authority will apply to contracts for any Service unless otherwise stated.

15.1.1. If Qualification Approval is required in connection with any particular contract the appropriate Authority is to be informed of the despatch of the sample valves and reference made to the contract concerned. However, it is not necessary for a manufacturer to wait until he has received a contract before submitting valves for Qualification Approval.

15.1.2. Sample valves submitted for Qualification Approval shall be accompanied by Form S.S.C.238 duly completed by the manufacturer. (Specimen forms may be obtained from the T.V.C. Office, Ministry of Aviation, Castlewood House. 77, New Oxford Street, London, W.C.1.).

15.1.3. The specified marking need not appear on sample valves submitted for Qualification Approval but the valves and packages must be clearly marked to provide safe means of identification.

15.1.4. One hundred sample valves will be required for Qualification Approval of a Reliable Valve, twelve of a Semiconductor Diode and six of all other types except when otherwise directed by the Approving Authority.

15.1.5. When valves are submitted for Qualification Approval two sample valves will be sealed and held for reference, one by the Approving Authority and one by the manufacturer, to enable comparison to be made later with valves purporting to be in accordance with approved samples. When this is impracticable adequate information (including drawings and photographs) to the satisfaction of the Authority will be accepted in lieu of a sample valve.

15.1.6. Valves submitted for Approval will be tested to this Specification and to the appropriate Test Specification. They may also be tested in equipment typical of that in which they are intended to be used.

15.1.7. Bulk deliveries are not to be made by a manufacturer until he has received notification of Qualification Approval from the Authority, except when delivery under a concession has been approved. (See Clause 4.2), or when Approval has been given for the use of the valve in MDAP equipment.

15.2. Production Approval. When valves are produced in accordance with Appendix IX a further stage of approval may be demanded. The number of valves required will be determined by the Inspection Levels and Acceptable Quality Levels stated in the Test Specification and shall be not less than the minimum number which will allow the specified Acceptable Quality Levels to be assessed.

Valves supplied for this stage of approval shall be selected at random from the production lot and shall be accompanied by full test results obtained on a similar sample from the same production lot.

15.3. Manufacturers shall submit new samples of valves for Qualification Approval if:-

(a) changes in design (as compared with previously approved valves) likely to affect the performance of the valve are introduced,

or (b) the interval since the type was last manufactured to Government order exceeds five years.

15.4. When a subsidiary factory is required to manufacture a valve, of a type and design for which Qualification Approval has already been granted to the parent factory, the following procedure shall apply:-

(a) Samples shall be submitted for Qualification Approval.

(b) The Approving Authority will make a preliminary inspection of the samples. If they appear to conform to the design already approved for the parent factory the manufacturer will be informed so that delivery of valves may proceed while full Qualification Approval tests are being completed.

When changes in design have been approved for the parent factory a separate submission of samples by a subsidiary factory will not always be necessary. At the time of the submission of samples the parent factory shall state whether it is intended to introduce the modification into valves manufactured by a subsidiary factory. The Approving Authority will then state whether a separate submission by the subsidiary factory will be required.

15.5. Qualification Approval granted in respect of a sample batch of valves shall not be taken to approve any departure from the specified requirements for that type of valve that may have existed in the samples submitted. Any such departure from the requirements of this specification must be specifically mentioned in the covering correspondence if a concession approving it is desired by the manufacturer.

15.6. Correspondence granting Qualification Approval will refer to the valves only and will not include packing unless this is expressly stated.

15.7. Maintenance of Qualification Approval Tests

15.7.1. When required by contract documents Maintenance of Qualification Approval Tests will be performed at suitable intervals (normally not more than once in six months) during the course of manufacture of the valves ordered.

When requested by the Inspection Authority the contractor shall provide the Testing Authority[x] with the necessary samples at the appropriate intervals and shall certify that such samples are typical of the bulk supply.

The Testing Authority will report the results of the tests to the Inspection Authority, Qualification Approval Authority, Production Departments and the Contractor.

Failure to pass Maintenance of Qualification Approval Tests will at once be notified by the Testing Authority to the Inspection Authority, Qualification Approval Authority, Production Departments and the Contractor, and acceptance may be suspended.

15.7.2. In circumstances which indicate that valves may fail to meet the Qualification Approval requirements, the Inspection Authority may propose that the tests described in 15.7.1. be exceptionally applied. On so doing, the Inspection Authority shall formally notify the Contractor to this effect and may suspend acceptance as from the date of the notice, pending the outcome of the test.

x Director E.I.D. "Aquila", Golf Road, Bromley, Kent.

Section 16

HOLDING PERIOD

PART I. MANDATORY (AL2)

16.1. All valves intended for delivery on contract shall, after completion of manufacture, be held in store for a specified holding period and shall then be tested or retested prior to despatch. Valves shall not be operated during the holding period.

16.2. The Test Specification will normally specify the minimum duration of the holding period together with the tests which are to be performed after completion of the holding period. Any valve failing to pass the specified tests shall be deemed a failure and removed from the lot.

16.3. Where in Test Specifications no mention of holding period is made the following Clauses appropriate to the class of valve shall apply.

16.3.1. The manufacturer may at his discretion perform any of the other tests specified in the test specification either prior to or after, completion of the holding period.

16.3.1. Air, Water and Radiation Cooled Valves excluding General Purpose Receiving Valves.

16.3.1.1. Duration of the Holding Period

The minimum duration of the holding period shall be fourteen days.

16.3.1.2. Post Holding Period Tests

Inspection for inoperatives together with a measurement of reverse grid current shall be performed. The maximum limit of -Igl shall not be more than 10% above the limit specified for this test in the test Specification.

16.3.2. Cathode Ray Tubes

16.3.2.1. Duration of the Holding Period

Minimum duration of the holding period shall be seven days.

16.3.2.2. Post Holding Period Tests

The tests to be performed after the holding period shall be agreed with the Specification Authority.

16.3.3. Gas or Vapour Filled Valves (Cold Cathode)

16.3.3.1. Scaling Tubes (including Vacuum Counter Tubes) (G.M. tubes etc.)

16.3.3.1.1. Duration of the Holding Period and Post Holding Period Tests

The minimum duration of the holding period and the tests to be performed after the holding period shall be agreed with the Specification Authority.

16.3.3.2. Spark Gaps, Arc Discharge, Trigger and Display Tubes

16.3.3.2.1. Duration of the Holding Period

Minimum duration of the holding period shall be fourteen days.

16.3.3.2.2. Post Holding Period Tests

Inspection for inoperatives together with specified measurement of eigher ignition or trigger voltage, as appropriate. The limits in the Test Specification shall apply.

16.3.3.3. Stabilisers (Glow Discharge and Reference Tubes)

16.3.3.3.1. Duration of the Holding Period

Minimum duration of the holding period shall be fourteen days.

16.3.3.3.2. Post Holding Period Tests

Inspection for inoperatives together with specified measurement of maintaining voltage. The limits in the Test Specification shall apply.

16.3.4. Gas or Vapour Filled Valves (Hot Cathode)

16.3.4.1. Ignitrons, Excitrons Rectifiers and Hydrogen Thyratrons

16.3.4.1.1. Duration of the Holding Period

Minimum duration of the holding period shall be fourteen days.

16.3.4.1.2. Post Holding Period Tests

Inspection for inoperatives together with a high voltage test. The limits in the Test Specification shall apply.

16.3.4.2. Thyratrons (other than Hydrogen)

16.3.4.2.1. Duration of the Holding Period

Minimum duration of holding period shall be fourteen days.

16.3.4.2.2. Post Holding Period Tests

Inspection for inoperatives together with ignition and high voltage tests. The limits in the Test Specification shall apply.

16.3.5. Klystrons (High Power)

16.3.5.1. Duration of the Holding Period

Minimum duration of holding period shall be twenty-eight days.

16.3.5.2. Post Holding Period Tests

The tests to be performed after the holding period shall be agreed with the Specification Authority.

16.3.6. Klystrons (Low Power)

16.3.6.1. Duration of the Holding Period

Minimum duration of the holding period shall be fourteen days.

16.3.6.2. Post Holding Period Tests

The tests to be performed after the holding period shall be agreed with the Specification Authority.

16.3.7. Magnetrons

16.3.7.1. Duration of the Holding Period

Minimum duration of the holding period shall be fourteen days.

16.3.7.2. Post Holding Period Tests

Where a test for stability is included in the test specification it shall be repeated, otherwise, the tests to be performed shall be agreed with the Specification Authority.

16.4.. Repeat Tests

The manufacturer may, in addition to the relevant tests specified in Clause 16.3 elect to repeat certain of the remaining tests detailed in the Test Specification.

16.5. Double Holding Period

Where a Double Holding Period is required, the Test Specification will state the details of the tests which are to be recorded.

16.6. Changes in Characteristics

In certain cases it may be necessary to specify in test specifications, allowed changes in characteristics for individual valves during the Holding Period.

PART 2. DELAYED SHIPMENT OF INSPECTED VALVES

16.7. Valves which have passed inspection and have subsequently been held in storage for a period in excess of twelve months shall prior to delivery be re-tested for inoperatives. (AL2)

Section 17

GROUPED TESTING OF STRUCTURALLY SIMILAR VALVES

When two or more types of valves with identical electrode designs are being tested they may be considered as one for the purposes of certain individual tests, subject to the approval of the Inspection Authority.

17.1. Examples of such similar types are:-

(a) A pinned miniature valve and its flying lead version, and

(b) The double diodes CV4007 and CV4025.

17.2. Examples of tests suitable for group testing are:-

(a) Life tests

(b) Certain Capacitance Tests, and

(c) Noise Factor Measurements

Section 18

CONTINUOUS PRODUCTION AND TESTING PROCEDURE

Certain testing procedures in this specification (e.g. Reduced Inspection in Section 7 of Appendix XI) are contingent upon production being continuous. For such purposes Continuous Production is defined as prevailing when:-

(a) There has not been any change of design or place of manufacture, and

(b) There has not been a break in production exceeding one month (or a longer period if approved by the Inspection Authority.)

Section 19

RADIOACTIVE VALVE

19.1. [redacted]oactive valves shall conform to the requirements specified whose [redacted]pendix XX.".

In th [redacted] substance or composition means one having radioactivity in excess [redacted]2 microcuries per gram,

except (a) that any one substance listed in the Table below may be introduced at the [redacted]cated level without the valve coming into the Radioactive Class.

and (b) that more than one substance listed in the Table below may be introduced without the valve coming into the Radioactive class provided that the sum of the fractions of the permitted Quantities in Column 2 of the Tables does not exceed unity.

e.g. - a valve containing 0.8 microcuries of Krypton 85 would have 8/10 of the permitted quantity of that material. If it also contained 0.02 microcuries of Caesium 137, this would, represent 2/10 of the permitted quantity of that material, making the sum of the fraction 8/10 + 2/10 = 1.0"

TABLE

OF RADIOACTIVE SUBSTANCES SHOWING QUANTITIES PERMITTED WHEN ONE SUBSTANCE ONLY IS USED WITHOUT THAT VALVE COMING INTO THE RADIOACTIVE CLASS

Column 1	Column 2	Column 3
Substance	Quantity Allowed per Valve in Microcuries	Radiation Dose Rate Allowed at Surface of Valve in Millirads per Hour
Hydrogen 3 (H3)	1.0	0.01
Carbon 14 (C14)	1.0	0.01
Chlorine 36 (Cl36)	1.0	0.01
Cobalt 60 (Co60)	0.1	0.01
Nickel 63 (Ni63)	0.1	0.01
Krypton 85 (Kr. 85)	1.0	0.01
Caesium 137 (Cs 137)	0.1	0.01
Thorium Natural	0.1	0.01
Thallium 204 (Tl 204)	0.1	0.01
Lead 210	0.1	0.01
Radium 226	0.1	0.01
Uranium Natural (U 238)	0.1	0.01

19.2. Radioactivity Declaration by Manufacturer

When radioactive material is incorporated into any valve whatever, the radioactive substance(s) and quantity(ies) concerned must be declared to the Qualification Approval Authority at the time of submitting samples for Approval.

19.2.1. Ministry of Aviation T.L.5b (T.V.C. Office) shall be informed for those valves having C.V. numbers but without C.V. Specifications.

19.3. Radioactivity Declaration by Approval Authority

The Qualification Approval Authority (or M.O.A./T.L.5b as appropriate) shall supply to other Specification and Qualification Approval Authorities and to the Inspectorates details of the Radioactive content of valves whether or not these valves fall within the definition of a Radioactive Valve. This information shall also be inserted on the Qualification Approval Certificate.

19.3.1. The Specification Authority shall endorse the relevant C.V. Specification, "This Valve may be Radioactive".

19.4. Further information on Services Radioactive Valves and their problems is given in T.V.C. Information Sheet No. 11.

19.5. Sources of further information on general radioactivity matters and Codes of Practice are listed in Appendix XVI.

JOINT SERVICE SPECIFICATION K1001

APPENDIX I

VALVE DIMENSIONS

1. GENERAL

This appendix contains general outline drawings of various types of valves. Wherever possible, Test Specifications will define dimensional requirements by reference to B.S.448.

2. INDEX OF DRAWINGS

The Drawings comprising Appendix I are:-

Drawing No.	Drawing Title
1	Conventional Glass Valves
2	Valves fitted with B9G Glass Base
3	Double Ended Glass Valves (Transmitting Type without Base).
4	Outline Dimensions of Valves B7G and B9A.
5	Top Caps
6	Anti-Corona Connector
7	B8B and B8G Glass Base Valves
8	Cartridge Crystal Valves, Dimensions
8A	Concentricity Gauge for Cartridge Crystal Valves
9	Shielded Co-axial Crystal Valves, Dimensions
9A	Concentricity Gauge for Shielded Co-axial Crystal Valves
10	Outline Dimensions of Miniature Valves B5A/F, B5B/F and B8D/F.
11	Outline Dimensions of Miniature Valves Type B7G/F and B9A/F.

DRAWING N°1

CONVENTIONAL GLASS VALVES

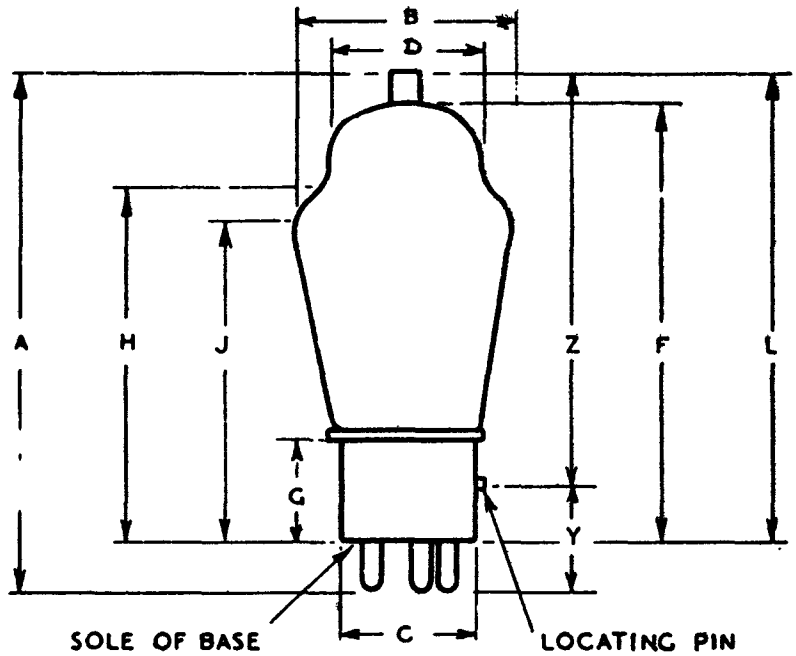

A. OVERALL LENGTH OF VALVE INCLUDING PINS, SPIGOT AND TOP CAP OR TERMINAL (SCREWED DOWN) IF PRESENT

B. DIAMETER OF VALVE AT PART OF MAXIMUM DIAMETER.

C. DIAMETER OF VALVE BASE AT PART OF MAXIMUM DIAMETER, EXCLUDING LIP IF ANY.

D. DIAMETER OF DOME OF VALVE

F. LENGTH, EXCLUDING PINS AND TOP CAP

G. HEIGHT OF BASE FROM SOLE OVER WHICH DIMENSION "C" APPLIES

H. HEIGHT FROM SOLE TO PART WHERE DIMENSION "D" APPLIES

J. HEIGHT FROM SOLE TO PART OF MAXIMUM DIAMETER.

L. HEIGHT FROM SOLE TO TOP OF VALVE, INCLUDING TOP CAP, IF ANY

Y. HEIGHT OF LOCATING PIN FROM END OF CONTACT PINS

Z. HEIGHT FROM LOCATING PIN TO TOP OF VALVE, INCLUDING TOP CAP IF ANY.

DRAWING No. 2.

VALVES FITTED WITH B9G GLASS BASE

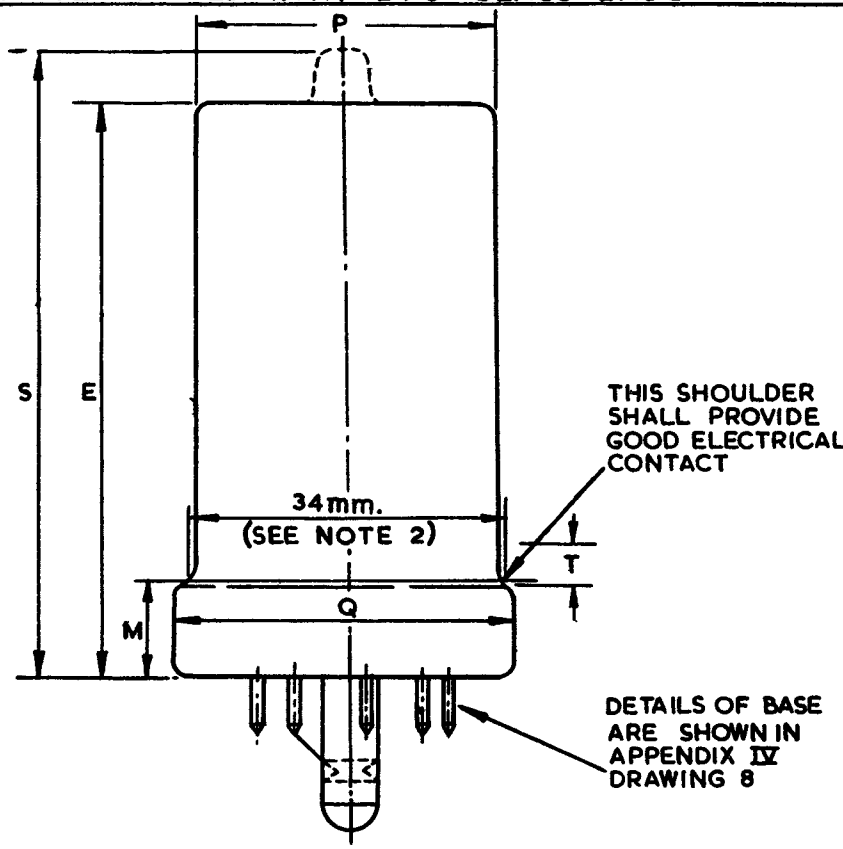

DIMENSION	LIMITS IN mm. (SEE NOTE 1)		
	MIN.	MAX.	NOTES
E	56.5	62	
M	8.5	11.5	2
P		34	
Q	36.1	37.2	
T		9.5	3
S	-	-	4

1. The dimensions stated above are mandatory unless the test specification for an individual valve states otherwise.
2. A 34 mm. ring gauge may be used.
3. Extent of metal in valves not completely canned.
4. This dimension will be specified, where applicable, on an individual test specification.

DRAWING No. 3

DOUBLE ENDED GLASS VALVES
(TRANSMITTING TYPE WITHOUT BASE)

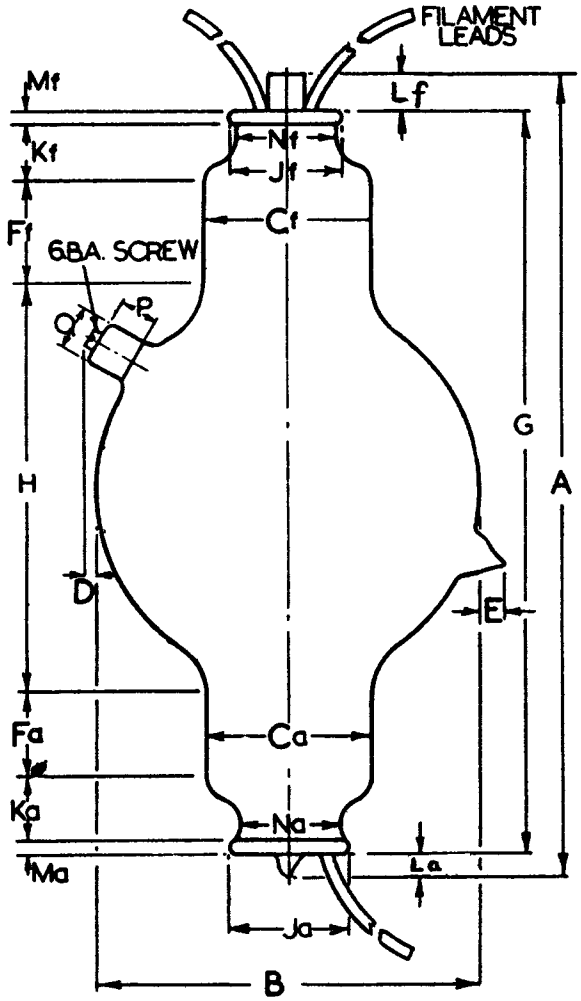

DIMENSIONS (SEE NOTES)

- A OVERALL LENGTH OF VALVE INCLUDING ANY PROJECTIONS SUCH AS SEALING-OFF PIP.
- B DIAMETER OF VALVE AT WIDEST PART, EXCLUDING ANY PROJECTIONS SUCH AS SEALING-OFF PIP OR CAP.
- C DIAMETER OF MAIN PARALLEL SIDED PORTION.
- D GREATEST PROJECTION OF CAP BEYOND BULB.
- E GREATEST PROJECTION OF PIP BEYOND BULB.
- F LENGH OF MAIN PARALLEL SIDED PORTION.
- G LENTH OF VALVE FROM FLANGE TO FLANGE, EXCLUDING ANY PROJECTIONS FROM THE FLANGE.
- H LENGTH OF CENTRE CURVED PORTION OF VALVE.
- J WIDTH OF FLANGE, IF DIFFERENT FROM C.
- K LENGTH OF END NON-PARALLEL PORTION, LESS THICKNESS OF FLANGE.
- L LENGTH OF PROJECTION FROM FLANGE OF PIP ETC.
- M THICKNESS OF FLANGE.
- N DIAMETER OF NARROWEST PARALLEL SIDED PORTION.
- P LENGTH OF METAL CONNECTING CAP.
- Q DIAMETER OF METAL CONNECTING CAP.

NOTES:-

1. THE DIMENSIONS 'A' TO 'F' ARE THOSE RECOMMENDED AS CONSTITUTING TOGETHER A SUFFICIENT SPECIFICATION OF BULB SIZE. IT IS OBVIOUS WHERE MAXIMA, MINIMA OR BOTH SHOULD BE SPECIFIED. THE DIMENSIONS 'G' TO 'Q' SHOULD IF POSSIBLE, BE LEFT UNSPECIFIED.
2. THE END OF THE VALVE WHERE THE FILAMENT LEADS EMERGE IS CALLED "f". THE OTHER END IS "a". DIMENSIONS PROBABLY SYMMETRICAL CAN IF NECESSARY BE DISTINGUISHED BY SUFFIX "a" OR "f" ACCORDINGLY, E.G. Da, Df. IF NO SUFFIX IS GIVEN THE DIMENSION SHALL APPLY TO BOTH ENDS.
3. THE TEST SPECIFICATION FOR AN INDIVIDUAL VALVE WILL STATE WHETHER THE ANODE LEAD IS TO BE BROUGHT OUT THROUGH A PINCH OR AT THE SIDE OF THE BULB AND WILL STATE ANY REQUIREMENTS CONCERNING THE TYING BACK OF LEADS.

DRAWING No. 4.

OUTLINE DIMENSIONS OF VALVES B7G AND B9A

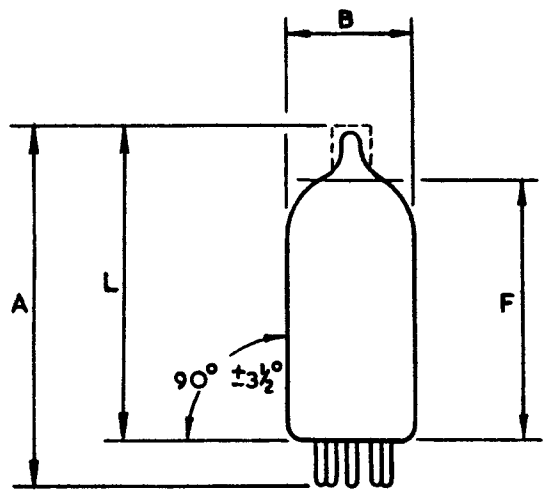

A Normal overall length of valve including pins and top cap where applicable.
B Max. diameter of bulb.
L Seated height including top cap if fitted.
F Seated height (retainer reference position)

NOTE

For details of bases and valve outlines see Appendix IV and B.S. 448, Sections B7G and B9A.

DRAWING No. 5.

TOP CAPS

FIG. 1.

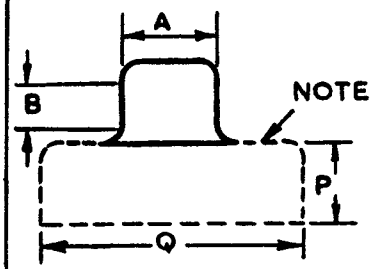

FIG. 2.

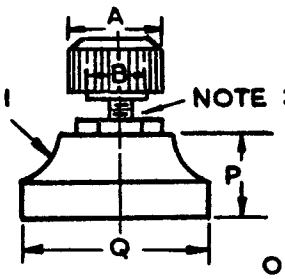

FIG. 3.

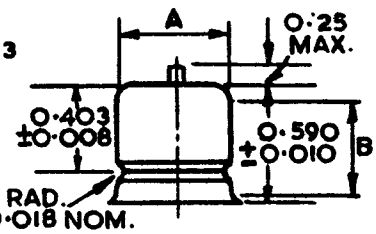

DIMENSIONS

(In inches except where otherwise stated)

B.S.448 REF.	TEST SPEC. REF.	FIG	A		B
			MIN	MAX	MIN
CT2	5.1	1	0.355	0.365	0.30
CT1	5.2	1	0.245	0.255	0.21
	5.3	2		9mm.	
CT6	5.4	2		0.47	0.30
CT3	5.5	1	0.559	0.573	0.38
CT4	5.6	1	0.740	0.760	0.63
CT9	5.7	1	0.373	0.377	0.50
	5.8	1	20.3mm.	20.6mm.	19.5mm.
	5.9	1	15.5mm.	16.2mm.	20.0mm.
	5.10	1	14.9mm.	15.1mm.	12.5mm.
CT5	5.11	3	0.585	0.595	0.47

NOTES

1. Caps may be fitted either with or without a skirt. The skirt may be of any convenient shape or material but the dimensions 'P'and 'Q' will be specified when necessary.
2. Dimension 'B' represents the length of the contact surface. It must be substantially cylindrical for Caps Fig. 1 and Fig.3.
3. The screw for Cap 5.3 is 4mm. metric thread. The screw for Cap CT6 is 6BA thread, formally 5BA.
4. Specification B.S.448 shall apply where shewn in the table of dimensions.

DRAWING No. 6.

ANTI-CORONA CONNECTOR.

6·1

(THIS PART IS FIXED TO THE VALVE).

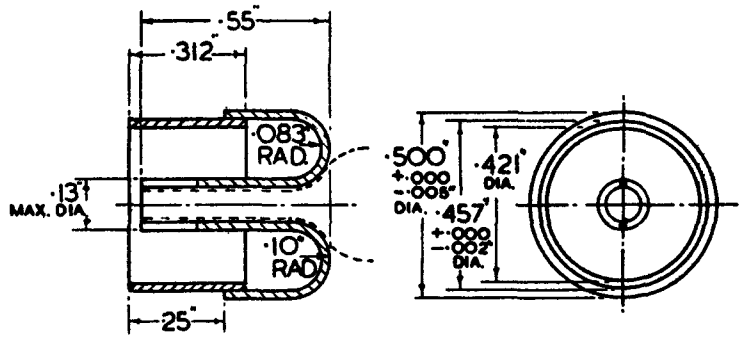

6·2

(THIS PART WHICH FITS 6·1 ABOVE, IS SHEWN FOR INFORMATION ONLY).

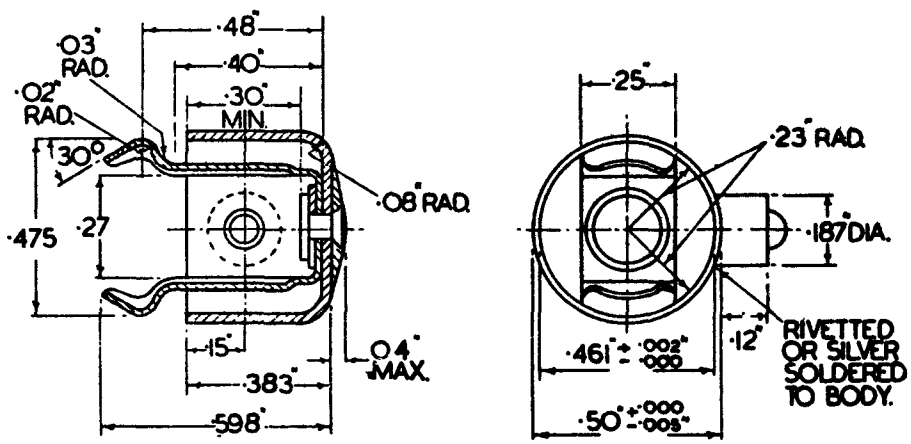

NOTES:-

1. ALL SHARP EDGES AND BURRS TO BE REMOVED
2. ALL PARTS ARE TO BE SILVER PLATED.
3. UNLESS OTHERWISE STATED TOLERANCES ON DIMENSIONS ARE TO BE WITHIN THE LIMITS ±0·005"

DRAWING No. 7.

B8B & B8G GLASS BASE VALVES

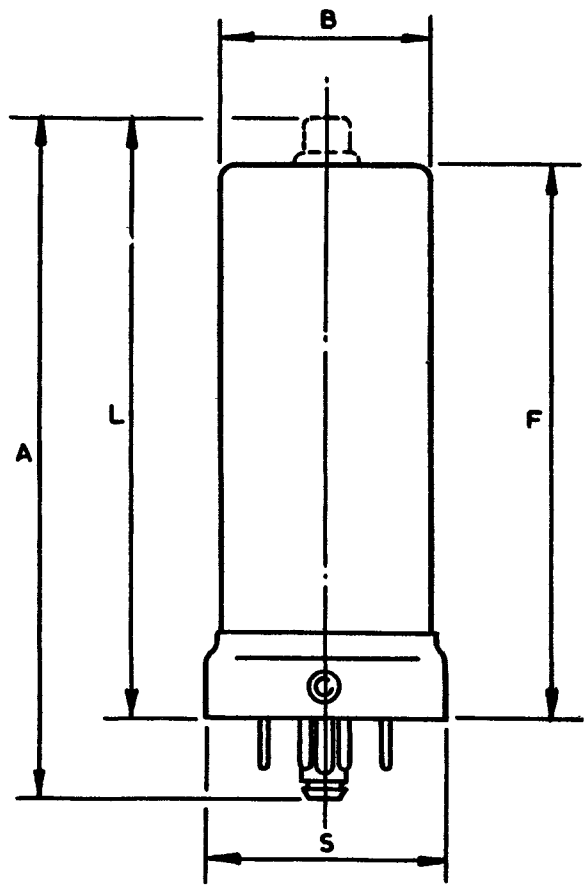

A Normal overall length of valve including pins and spigot and top cap when applicable.
B Diameter of bulb or can if fitted.
F Seated-height excluding top cap.
L Seated height including top cap when applicable.
S Diameter of shell.

For further details see Drawing No.12, Appendix IV and B.S.448.

DRAWING No. 8.

CARTRIDGE CRYSTAL VALVES.

DIMENSIONS.

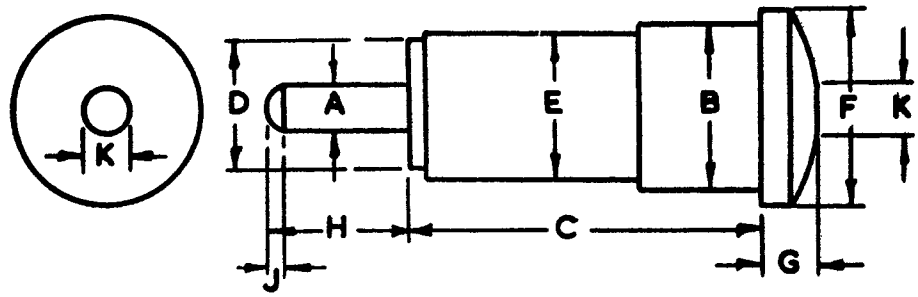

DIMENSION	INCHES. MIN.	INCHES. MAX.	NOTE
A	0·093	0·096	
B	0·247	0·250	
C	0·535	0·575	
D	0·210	0·226	
E	–	0·240	
F	0·285	0·315	
G	0·050	0·060	
H	0·195	0·205	
J	0·015 NOMINAL		(iii)
K	0·125		(i)
OVERALL LENGTH WITH ABOVE TOLERANCES	0·780	0·840	

NOTES (i) K IS THE APPROX. MIN. DIAMETER OF A CIRCULAR FLAT ON THE ASSEMBLY. THERE MUST BE SOME CHAMFER AROUND THIS FLAT, AS SHEWN.

(ii) A HOLE IS TO BE MADE IN THE CENTRE OF THE FLAT, AS SHEWN, (WITH $^{1}/_{16}$ IN. DRILL OR 12 B.A. TAP) OF APPROX.

DIAMETER _ _ _ _ _ _ _ _ _ 0·06 IN.
AND NOMINAL DEPTH _ _ _ _ _ _ _ _ 0·01 IN.

(iii) J IS THE NOMINAL LENGTH OF THE CHAMFERED PORTION.

(iv) CONCENTRICITY MUST BE CHECKED BY USE OF GAUGE AS DETAILED IN DRAWING No. 8A.

DRAWING No. 8A

CONCENTRICITY GAUGE FOR CRYSTAL VALVES

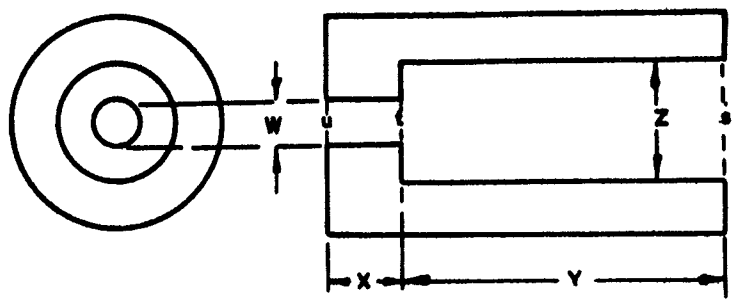

MATERIAL.

HARDENED STEEL

DIMENSIONS (INCHES.)

W	0·135
X	0·205
Y	0·575
Z	0·251

TOLERANCES.

0·001 IN. MAX. ON DIAMETERS.

0·005 IN. MAX. ON LENGTHS.

FINISH :- EDGES SLIGHTLY CHAMFERED.

OPERATION :- INSERT CRYSTAL VALVE INTO GAUGE.

(a) PART OF DIMENSION A (TIP) MUST FIT EASILY INTO PART "tu" OF GAUGE.

(b) PART OF DIMENSION B MUST FIT EASILY INTO PART "st" OF GAUGE.

(c) PART OF DIMENSION F MUST BUTT AGAINST SURFACE "s" OF GAUGE.

DRAWING No. 9.

SHIELDED COAXIAL CRYSTAL VALVES

DIMENSIONS.

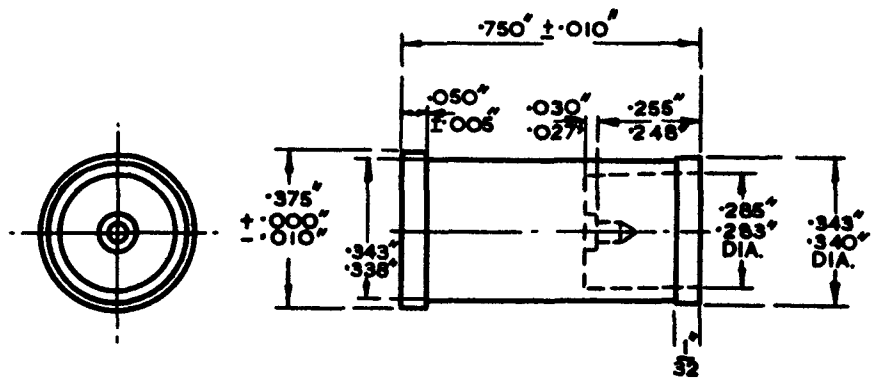

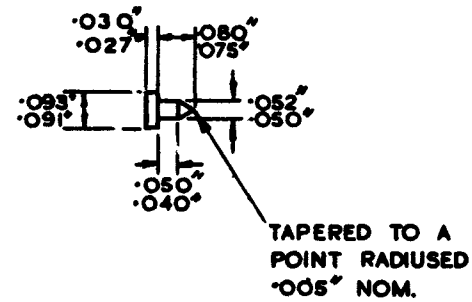

PIN DETAILS

NOTE :- CONCENTRICITY SHALL BE CHECKED BY THE USE OF A GAUGE AS DETAILED IN DRAWING No. 9A.

DRAWING No.9A.

CONCENTRICITY GAUGE
FOR SHIELDED COAXIAL CRYSTAL VALVES.

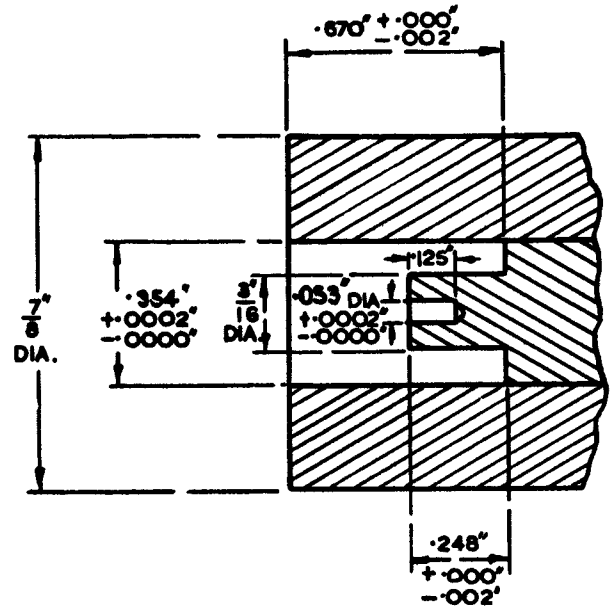

DRAWING No. IO.

OUTLINE DIMENSIONS OF SUB-MINIATURE VALVES

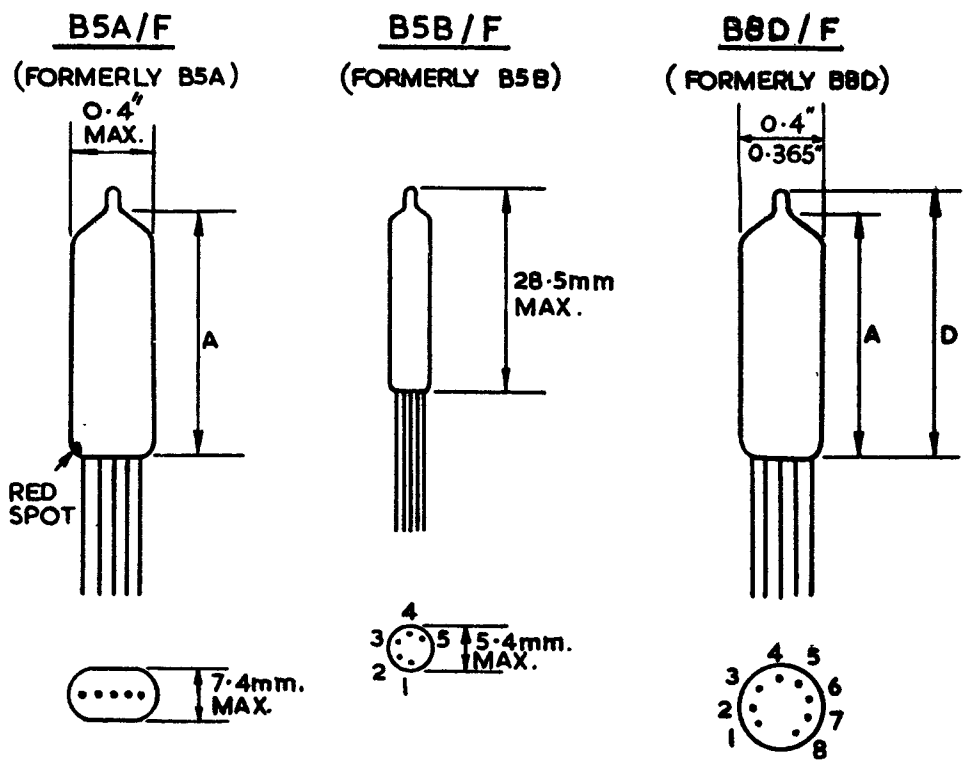

NOTES

1. The leads shall be flexible tinned wire, 0.017 inch nom. dia. Electrotinning shall not be used.
2. The minimum length of all leads shall be 1.5 inches.
3. The dimension A is measured from the sole to the retainer reference position as determined by ring gauges.
4. The names B5A, B5B and B8D are now reserved for the valves when the leads are cut short to fit in holders.
5. For further details see B.S.448.

DRAWING No. 11.

OUTLINE DIMENSIONS OF MINIATURE VALVES TYPE B7G/F & B9A/F

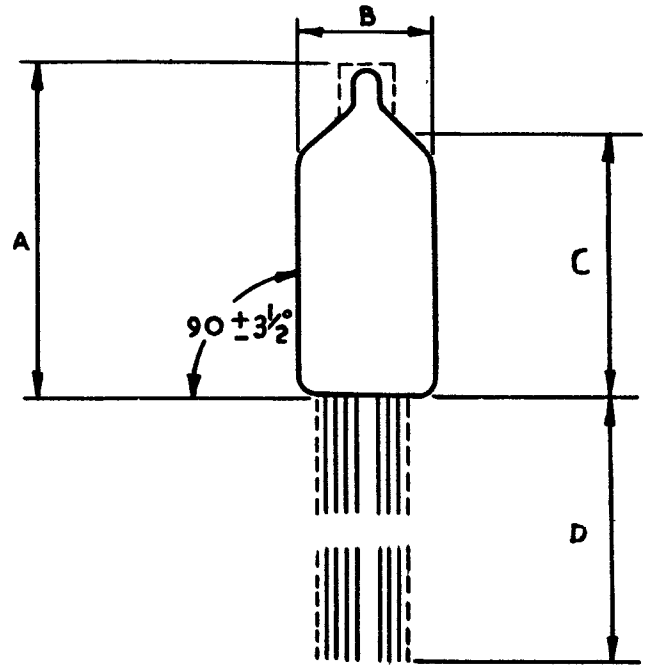

A Seated height, including top cap if fitted.
B The maximum diameter of B7G/F is 19 mm and of B9A/F is 22 mm.
C Measured from the sole to the retainer reference position as determined by a ring gauge 7/16 inch int. dia.
D The leads shall be flexible tinned wire 0.017 inch nominal diameter and 1.5 inch minimum length.
Electrotinning shall not be used.

For further details see B.S.448.

JOINT SERVICE SPECIFICATION K1001

APPENDIX II

ABBREVIATIONS AND SYMBOLS

1. The symbols given in British Standard 1409 :1950 "Letter Symbols for Electronic Valves" are used in K.1001 Test Specifications as far as possible but they do not cover all the requirements of those specifications. Many additional abbreviations and symbols are used and these are given in this Appendix together with those of B.S.1409.

2. Many K 1001 Test Specifications were issued before B.S.1409 was published and they contain a number of abbreviations which conflict with the meanings given in the British Standard. Although appropriate changes are made, if practicable, when these specifications are revised it is unlikely that the amendment of conflicting symbols will be complete in the foreseeable future. The alternative meanings will be found in this Appendix and the correct ones should be easily understood from the context in the Test documents.

3. The symbolic names for valve bases are in general those given by the British Radio Valve Manufacturers' Association.

4. Subscripts in printed documents such as B.S.1509 and manufacturers' catalogues are usually printed slightly below the line of the print. This "dropping" of subscripts cannot be readily done with a typewriter; therefore, as Test Specifications are generally reproductions of typed papers, the symbols in this appendix are given with the subscripts on the same line as the main lettering.

B.S.1409	K1001 (prior to adoption of BS 1409)	
	A	Ampere. Anode
a		Anode
	A1 etc.	First anode etc. (See Note 1, Page 8)
	Aa,Ab	Anodes in a multiple valve (See Note 2, Page 9)
	AC	Alternating current
	Ad	Diode anode
	AF	Audio frequency
Ag		Gas amplification in phototubes
	Ao	Oscillator anode (See Note 3, Page 9)
ASE		Overall amplification in secondary emission amplifiers
	B	Beam forming plates. Energy bandwidth of a receiver
B		Brightness in cathode-ray tubes
b		(Used as a subscript) Battery or other source
	B2A	2-pin base used on G.M. Counter tubes
	B2B	2-pin base for photo-conductive cells
	B3A	American Pee-Wee 3-pin base (See App. IV, Drawing No. 28)
	B3B/A	
	B3D	
	B3D/F	Transistor base with flying in-line leads
	B3G	3-pin in-line lead glass base (See App. IV, Drawing No.10)
	B4	Original British 4-pin base (See App. IV. Drawing No. 5)
	B4A	American 4-pin base used on CV398, CV2752, CV2814 etc. (See App. IV, Drawing No. 29)
	B4B	4-pin base for phototubes (See App. IV, Drawing No. 30)
	B4D	American Super Jumbo 4-pin base with bayonet (See App. IV, Drawing No. 22)
	B4E	4-clip base for cathode-ray tubes
	B4F	American Jumbo 4-pin base (See App. IV, Drawing Bo. 23)
	Bc4	4-pin base with bayonet (See App. IV, Drawing No. 41)
	B5	British 5-pin base (See App. IV, Drawing No. 5)
	B5A	B5A/F base with leads cut short for insertion in a valveholder
	B5A/F	5-lead, in-line, subminiature base with flying leads (See App. I, Drawing No. 10) (Mullard and M.O.V.)
	B5B	B5B/F base with leads cut short for insertion in a valveholder
	B5B/F	5-lead button base with flying leads for subminiature valves (See App. I, Drawing No. 10)
	B5D	American Giant 5-pin base (See App. IV, Drawing No. 33)
	B5E	Alternative version of B5D (with metal shell) (Eimac and R.C.A., See App. IV, Drawing No. 34)
	B5F	Alternative version of B5D (Mullard and Phillips, See App. IV, Drawing No. 35)
	B5G	B5G/F base with leads cut short for insertion in a valveholder.
	B5G/F	American 5-lead, in-line, subminiature base with flying leads
	B5H	
	B5H/F	5-lead, in-line, flat miniature base (Hivac)
	B5J	
	B5J/F	Pressed glass electrometer base (Mullard)

B.S.1409	K1001 (prior to adoption of BS1409)	
	B5K	5-pin Super Giant Base (Philips)
	B7	British 7-pin base (See App. IV, Drawing No. 5)
	B7A	American Septar 7-pin base (See App. IV,Drawing No. 24)
	B7B	7-pin CRT base (E.M.I.) (See App. IV, Drawing No. 54)
	B7D	American Medium Shell Giant 7-pin base with bayonet (See App. IV, Drawing No. 25)
	B7E/F	American 7-lead, in-line, flat subminiature base
	B7G	Small button miniature 7-pin base (See App.IV,Drawing No. 9)
	B7G/A	Welded lead version of B7G base (S.T.C.)
	B7G/B	Welded lead version of B7G base (G.P.O.)
	B7G/F	B7G base with flying leads instead of pins
	B8A	Rimlock 8-pin base with location boss
	B8B	8-pin glass base
	B8D	B8D/F base with leads cut short for insertion in a valveholder.
	B8D/F	8-lead circular subminiature base with flying leads (See App. I, Drawing No. 10)
	B8E	8-pin CRT base (Formerly E.M.8, See App. IV,Drawing No. 17)
	B8F	American 8-pin base used on CV2519 (4X150 A)(See MIL-E-1 spec.)
	B8G	8-pin locking-in base (See App. IV,Drawing No. 12)
	B8G/F	B8G base with flying leads
	B9	British 9-pin base (See App. IV, Drawing No. 5)
	B9A	9-pin Noval base (See App. IV, Drawing No. 26)
	B9A/B	Welded lead version of B9A base (G.P.O.)
	B9A/D	B9 base with central exhaust tubulation (Mullard)
	B9A/F	B9A base with flying leads
	B9B	9-pin base for vibrators
	B9G	9-pin glass base (See App. IV,Drawing No. 8)
	B9G/B	Welded lead version of B9G base (G.P.O.)
	B10A	
	B10A/A	10-pin glass base with welded leads (S.T.C.)
	B11A	American 11-pin Sub-Magnal base (See App. IV,Drawing No.27)
	B12A	American 12-pin Duodecal base (See App. IV,Drawing No. 39)
	B12B	12-pin spigot base (See App. IV, Drawing No. 16)
	B12D	12-pin side contact CRT base with key (See App. IV, Drawing No. 15)
	B12E	B12A base with cap on spigot (See App. IV,Drawing No. 47)
	B12F	12-pin glass base for CRT (Electronic Tubes Ltd.)
	B12G	12-pin glass base for CRT (E.M.I. Ltd.)
	B14A	American Diheptal 14-pin base (See App.IV,Drawing No.40)
	B14B	14-pin pressed glass base for CRT (E.M.I. Ltd.)
	B15A3	3-pin base (formerly 3-pin Quindecal) used on CV339 (See App. IV, Drawing No. 21)
	B15B	15-pin glass base (E.M.I., used on photomultipliers)
	B22	Bayonet Lamp Cap (See App. IV, Drawing No. 14)
	BC4	Medium 4-pin bayonet base (See App. IV, Drawing No. 41)
bp		Beam forming plate
C		Capacitance (for associated circuits)
c		Capacitance (for valve)
C in	(Input Cap.)	Grid to all electrodes except anode
C out	(Output Cap.)	Anode to all electrodes except grid

	C	Capacitance, cathode, centigrade (^{o}C)
	C-all	Capacitance between cathode and all other electrodes
	Ca-all	Capacitance between anode and all other electrodes
	Cac	Anode to cathode capacitance (See Note 5, Page 9)
	Cae	Capacitance between anode and all other electrodes except the grid
	Cag	Anode to grid capacitance
	CC	Internal conductive coating
	Cgc	Grid to anode capacitance
	Cge	Capacitance between grid and all other electrodes except the anode
	CK12	See B12D
cf		Switch, fixed contact
	CL3	3-clip base (See App. IV, Drawing No. 11)
	CL6	6-clip base (See App. IV, Drawing No. 18)
	CL7	7-clip base (See App. IV, Drawing No. 19)
cm	cm	Switch, moving contact. Centimetre
C.M.F.		Cross-modulation factor
CRT	CRT	Cathode Ray Tube
	c/s	Cycles per second
cw		Capacitance, working
	Cx-all	Capacitance between one X plate and all other electrodes
	Cxy	Capacitance between one X plate and one Y plate
	Cy-all	Capacitance between one Y plate and all other electrodes
D	D	Distortion. Diode anode.
d	d	(Used as a subscript) Diode. Deci-
	db	Decibel
	DC	Direct current
Δf		Bandwidth
D.F.		Duty factor
	dia	Diameter
	Dy	Dynode
	EFC	Equivalent foot candles
	E	Earth
	EL4B	Large-4-pin base
	EM8	8-pin base, now B8E (See App. IV, Drawing No. 17)
eq		(Used as a subscript) Equivalent
	ES	Medium Edison Screw Base (See App. IV, Drawing No. 13)
ESD	ESD	Electrostatic deflection
ESF	ESF	Electrostatic focus
ext		(Used as a subscript) (Extinction (Voltage)
	F	Farad. Filament
f(-)	F-	Filament terminal connected to negative side of supply
f(+)	F+	Filament terminal connected to positive side of supply
f	f	Filament (emitting). Frequency
f max		Frequency limit, maximum
f min		Frequency limit, minimum
	G	Grid (See Note 4, Page 9)
	G1 etc.	First grid etc. (See Note 4, page 9)
	G1-all	Capacitance between G1 and all other electrodes
	G1a etc.	See Note 2, page 9
g		Grid
gc	gc	Conversion conductance

B.S.1409	K1001 (prior to adoption of BS1409)	
	GES	Goliath Edison Screw base (See App. IV,Drawing No. 13)
gm	gm	Mutual conductance. Slope
	Go	Oscillator grid (See Note 3, page 9)
	H	Henry, Oersted. Heater
h		Heater. (Used as a subscript) Hexode. Heptode. etc.
	HCT	Heater centre tap
het		(Used as a subscript) Heterodyne
	HF	High Frequency
	Hg	Mercury
H.M.F.		Hum-modulation factor
	hr	Hour
	HT	High tension
I		Direct current
	Ia	Anode current
	Ia peak	Peak anode current
Iav		Average value of the direct component of a complex current wave
	Ib	Beam current (Cathode Ray Tube)
IC		Pin with an unspecified internal connection which must not be used for an external connection
	Ic	Total cathode current
	Ie	Cathode emission current
	IF	Intermediate frequency
	If	Filament current
	Ig, Igl etc.	Grid Current (See Note 4, page 9)
ign		(Used as a subscript) Ignition (Voltage)
	Ih	Heater current
	Ihc	Heater-cathode current
in		(Used as a subscript) Input.
inv		(Used as a subscript) Inverse (voltage or current)
	Ins	Insulation
	IO	International Octal base. Now known as the Octal base with the symbol O or B8-O (See App. IV, Drawing No. 2)
Io		No-signal current
ipk		Peak current
I r.m.s.		Alternating current (r.m.s.)
	Ish	Internal shield or coating current
	K	Kelvin. Boltzmann's constant
k	k	Cathode. Kilo-
k1		Primary cathode
k2 etc.		Secondary cathodes of secondary emission valves
	kc/s	Kilocycles per second
	kW	Kilowatt
L	L	(Used as a subscript) Total effective working load Inductance. Conversion loss in decibels
	L4	4-pin low loss base(See App. IV, Drawing No. 6)
	LF	Low frequency
	LO	Local oscillator
	λ	Wavelength
M	M	External conductive coating forming an integral part of the valve (e.g. metallizing, metal shell or can). Mega-. Meg-. Magnetic. Mutual inductance of circuit.

B.S. 1409	K1001 (prior to adoption of BS 1409)	
m	m	Internal conducting coating. Mutual inductance of valve. Metre. Milli-
μ	μ	Amplification factor. Micro-
	μS	Microsecond
	mA	Milliampere
	max	Maximum
	Mc/s	Megacycles per second
MD	MD	Magnetic deflection
	MES	Miniature Edison Screw base (See App. IV. Drawing No. 13)
MF	MF	Magnetic focus
	mm	millimetres
	min.	Minimum. Minute
	MO	Mazda Octal base (See App. IV, Drawing No. 3)
mod		(Used as a subscript) Modulation
	MΩ	Megohm
NC		Pin with no internal connection
	NIF	Noise factor of I.F. Amplifier
	Nom	Nominal
NP		No pin
NR		Noise factor of receiver
NSE		Secondary emission ratio, in S.E. Amplifiers
	O	Octal base. Formerly International Octal with the symbol I.O. (See App. IV, Drawing No. 2)
	Ω	ohm
out		(Used as a subscript) Output
P		Power (for associated circuit)
p		Power. (Used as a subscript) Pentode. Pico-
	PB8	8-pin Bayonet base (See App. IV, Drawing No. 20)
	PEC	Photoelectric cell. Photocell
pdr		Driving power
	pF	Picofarad
P.I.V.	PIV	Peak inverse voltage
P.R.F.	PRF	Pulse recurrence or repetition frequency
	PS10	Spigot base (See B12B)
	PS12	Spigot base (See B12B)
q		(Used as a subscript) Tetrode
R	R	Resistance of associated circuit
r		Resistance of valve. (Used as a subscript) Rectifier
	Ra	Anode AC resistance or impedance
	Rad	Radius
	Ref	Reflector
Res	Res	Resonator
	RF	Radio Frequency
	Rl	Load resistance
r.m.s.	RMS	Root mean square
	RO	I.F. Impedance of a mixer
S	S	Sensitivity of cathode ray tube or photocell.
s		Internal shield
SC	SC	Pin connection for the shell of certain metal valves. Side contact
	SC8	8-pin side contact base

B.S. 1409	K1001 (prior to adoption of BS1409)	
	Sec	Second
	SES	Small Edison Screw base (See App. IV, Drawing No. 13)
	Sh	Internal Shield
sig		(Used as a subscript) Signal
	Sp	Special
stab		(Used as a subscript) Stabilized
sur		(Used as a subscript) Surge voltage or current
	SWR	Standing wave ratio
	Sx	Deflection sensitivity of C.R. tube X-plates
	Sy	Deflection sensitivity of C.R. tube Y-plates
	T	Temperature. Target
t		(Used as a subscript) Triode. Fluorescent screen or other target. Noise temperature ratio
T bulb		Bulb temperature
THg		Condensed mercury temperature
T pin		Pin temperature
Trad		Radiator temperature
Tseal		Seal temperature
tap		(Used as a subscript) Tapping on filament or heater
td		Deionization time
thk		Cathode heating time
ti		Ionization time
tp		pulse duration
tsd		Switching delay time
tc	TC	Top contact. Top cap
	Tp	Pulse duration
	T4	4-pin metal shell base (See App. IV, Drawing No. 7)
	UHF	Ultra high frequency
	USD12) USD14)	American Diheptal base. Now B14A (See App. IV, Drawing No. 40)
	USG5	American Giant 5-pin base with bayonet. Now B5D (See App. IV, Drawing No. 33)
	USG7	American Giant 7-pin base with bayonet. Now B7D (See App. IV, Drawing No. 25)
	USL4	American Large 4-pin base, (See CV1506 specification)
	USM4	American Medium 4-pin base, No. A4-9 (See App. IV, Drawing No. 48)
	USM4B	American Medium 4-pin bayonet base. No. A4-10 (See App. IV, Drawing No. 49)
	USM5	American Medium 5-pin base, No. A5-11 (See App. IV, Drawing No. 50)
	USM5B	American USM5 base with bayonet pin (See CV2595 specification)
	USM6	American Medium 6-pin base. No. A6-12 (See App. IV, Drawing No. 51)
	USM7	American Medium 7-pin base. No. A7-13 (See App. IV, Drawing No. 52)
	USM11	American Magnal 11-pin base, Nos. B11 - 33 and B11 - 66 (See App. IV, Drawing No. 45)
	USS4	American Small 4-pin base, No. A4 - 5 (See App. IV, Drawing No. 48)

B.S.1409	K1001 (prior to adoption of BS1409)	
	USS5	American Small 5-pin base, No. A5-6 (See App. IV, Drawing No. 50)
	USS6	American Small 6-pin base, No. A6-7 (See App. IV, Drawing No. 51)
	USS7	American Small 7-pin base, No. A7-18 (See App. IV, Drawing No. 52)
	USSM11	American Sub-Magnal base. Now B11A (See App. IV, Drawing No. 27)
V	V	Direct Voltage. Volt
	Va	Anode Voltage
	Vao	Oscillator anode voltage
	Val etc.	First anode voltage, etc.
Vav		Average value of the direct component of complex voltage wave
	Vcc	Internal conductive coating voltage
	Vf	Filament voltage
	Vg	Grid voltage
	Vg1 etc.	First grid voltage, etc, (See Note 4, page 9)
	Vh	Heater voltage
	Vhc	Voltage between heater and cathode
	VHF	Very high frequency
	Vht	H.T. supply voltage
	VM	Velocity modulated
	Vr	Reflector voltage
Vr.m.s.		Alternating voltage (r.m.s.)
	Vsh	Internal shield voltage
	Vt	Target voltage
Vpk		Peak voltage
	W	Watts
	Wa	Anode dissipation, anode wattage
	Wg	Grid dissipation
	Wg1 etc.	First grid dissipation (See Note 4, page 9)
wr		Wave retardation electrode
X		Reactance of associated circuit
x		Reactance of valve. Deflector electrode
	X1, X2	X-plates of cathode ray tube
	Y1, Y2	Y-plates of cathode ray tube
Y		Admittance of associated circuit
y		Admittance of valve. Deflector electrode
Z		Impedance of associated circuit
z		Impedance of valve

NOTES

1. Anodes are numbered sequentially along the direction of electron flow. When a C.R.T. specification allows for a given number of anodes and a design of tube is accepted which has no separate A1 connection, the anodes will always be numbered as if, in fact, there were an A1. For example if a tube without a separate A1 connection be accepted to a specification for a three anode tube, the final anode will be known as A3 and the focussing anode as A2.

2. When similar electrodes are equidistance from the filament, or occur in two or more identical structures they are differentiated by the addition of the letters "a" and "b". This rule applies to all electrodes, but does not hold for frequency changers. (See Note 3).

3. In a self oscillating frequency changer valve which employs an independent grid and anode in the oscillator section, these are designated by the suffix o.

4. Where a valve contains more than one grid, they are numbered G1, G2, G3, etc., commencing with the grid nearest the filament or cathode.

5. Cag, Cge, Cac are "direct" capacitances with the unmentioned electrodes earthed.

JOINT SERVICE SPECIFICATION K1001

APPENDIX III

THE MEASUREMENT OF

INTER-ELECTRODE CAPACITANCES

Section 1. FOREWORD

The capacitances referred to in the individual specifications for valves are the direct capacitances between two electrodes or between groups of electrodes excluding the capacitances between external base pins or connectors. Full details appear in Section II.

The individual valve specifications usually specify the pin connection arrangements to be used for measuring the capacitances required. These connections will usually be referred to the three terminals of the bridge and will be designated HP, LP and E. These correspond to points B, C and D respectively on the diagram FIG. 1 in Section 2, Para. 2.1.4.1.

1. The Bridge

1.1. When the Radio frequency bridge described in Section 2 is used, the accuracy of measurement shall conform to the limits stated below.

Capacitance Range	Max. Error
0.001 pf - 0.005 pf	±0.0001 pf
0.005 pf - 0.01 pf	±0.0002 pf
0.01 pf - 0.05 pf	±0.001 pf
0.05 pf - 0.10 pf	±0.002 pf
0.01 pf - 0.5 pf	±0.01 pf
0.5 pf - 1.0 pf	±0.02 pf
1 pf - 10 pf	±0.1 pf
10 pf - 20 pf	±0.2 pf
20 pf - 100 pf	±1 pf

1.2 Discrimination

This shall be at least five times better than the accuracy of measurement on all ranges.

1.3 Side Capacitance

Side capacitance of up to 300 pf between either HP or LP terminal to earth shall not cause the accuracy of measurement to exceed the limits specified.

1.4 Set Zero adjustment - This shall allow correction for at least 30% of each range without causing any change in the accuracy or discrimination as required by 1.1 and 1.2.

1.5 Approved reference standard capacitances may be used for checking the calibration of the bridge as and when necessary.

2. Valve Bases Adaptors Sockets Shields and Top Caps

These shall conform to the requirements of Section 2, Clauses 2.2, 2.3 and 2.4.

SECTION 2

MEASUREMENT OF DIRECT INTERELECTRODE CAPACITANCES OF ELECTRONIC VALVES

Table of Contents

2.1 Methods of tests

2.1.1 Definitions .....

2.1.2 Measurement of interelectrode capacitance of valves .....

Tables of connections of electrodes
Table I - Receiving valves .....
Table II - Cathode Ray Tubes .....
Table III - Gas Filled Valves .....
Table IV - Photocells and Photomultipliers .....
Table V - High power valves.....

2.1.3 Conditions of tests .....

2.1.4 Capacitance Measuring Circuits .....

2.2 Standard capacitance sockets including Table VI .....

2.3 Standard shields including Table VII .....

2.4 Standard cap connectors .....

SCOPE

This document covers the measurement of direct interelectrode capacitances of valves in the following classes: Receiving Valves, Cathode Ray Tubes, Gas-filled Valves, Photocells, Photomultipliers and High Power Valves.

2.1 Methods of Tests

2.1.1. Definitions

In this document the following definitions will apply:-

Element (of an Electronic valve). Any integral part of the valve that contributes to its operation and to which external connections can be made.

Electrode (of an Electronic valve). A conducting element that performs one or more of the functions of emitting, collecting, or controlling by an electric field the movement of electrons or ions.

Filament (of an Electronic valve). A hot cathode (usually in the form of a wire or ribbon) which is heated directly by current flowing in it.

2.1.2. Measurement of interelectrode capacitances of valves

The specified interelectrode capacitance shall be measured directly rather than derived from combinations of two or more individual capacitance measurements. In the measurement, elements to be excluded are connected to the reference ground. This is not to be confused with grounding or earthing in circuit applications. Valve elements shall be connected as follows unless otherwise specified:-

Group of Valves	Electrode Connections	Parts left Floating, Capacity to other objects being kept at a minimum.	Connections of Elements other than Electrodes	Metal Parts
General Types	Connect as specified in table of connections.	-	Connect to cathode.	Connect to cathode (External shields, base sleeves which have internal connection, unused pins or leads)
Cathode Ray Tubes	ditto	Post deflection accelerators (Intensifier electrodes)	Ground those elements not common to unit under test.	ditto.

Table Continued Overleaf

Group of Valves	Electrode Connections	Parts left Floating, Capacity to other objects being kept at a minimum	Connections of Elements other than Electrodes	Metal Parts
Multiple Unit Valves such as Diode-Triodes, Triode-Pentodes, multi-gun cathode ray tubes etc.	Connect as specified in table of connections	-	Ground those elements not common to unit under test.	Connect to cathode (External shields, base sleeves which have internal connection, unused pins or leads)
Valves with metal sleeve not connected internally	ditto	Metal base sleeve	ditto	ditto

In all cases when stating capacitance values, it shall be made clear which electrodes and elements are connected to the active terminals of the measuring equipment, and which are connected to the ground. This may be done either in words or symbols. Certain descriptive terms are used with the meanings assigned in the following tables.

On all types, for elements terminated in two or more pins or leads, all such pins or leads shall be connected together.

In those cases where two or more elements are internally connected, the combination shall be treated as the major element of the combination. For example, a suppressor grid internally connected to the cathode shall be considered the cathode in the tables of connections. For directly-heated filament types, the filament is the cathode electrode.

TABLES OF CONNECTIONS OF ELECTRODES FOR MEASURING DIRECT INTERELECTRODE CAPACITANCE

Table I - Receiving Valves

Type of Valve	Capacitance	Measure Between		Connect to Reference Ground
Indirectly heated cathode	Heater-cathode	Heater	Cathode	All other elements, shields, metal parts, etc.
Diode	Diode anode-all			
	(a)	Anode	Cathode + heater + shields + metal parts, etc.	Other units
	(b)	Anode	Cathode + heater + shields + metal parts + other Units, etc.	
	Diode anode-earth	Diode-anode	Cathode + heater + shields + metal parts, etc.	Other diode anode
	Diode cathode-anode	Cathode	Diode anode + heater + shields + metal parts etc.	Other unit(s).
	Coupling (between units)	Diode anode	Anode of other unit(s)	All other elements, shields, metal parts, etc.
	Coupling (between units)	Diode anode	Grid of other unit(s)	All other elements, shields, metal parts, etc.
Triode, tetrode pentode	Inter-electrode (General)	First specified electrode	Second specified electrode of same unit	All other elements, shields, metal parts, etc.
	Grid-Anode	Grid	Anode	All other elements, shields, metal parts, etc.
	Input	Grid	Cathode + heater + screen + suppressor + shields + metal parts, etc.	Anode, diode, inactive unit(s).

/Table Continued Overleaf

Type of Valve	Capacitance	Measure Between		Connect to Reference Ground
	Output	Anode	Cathode + heater + screen + suppressor + shields + metal parts, etc.	Grid, diode, inactive unit(s).
	Anode-Earth	Anode	Cathode + heater + screen + suppressor + shields + metal parts + diode anodes + inactive units, etc.	Grid
	$Grid_n$ -earth (4)	$Grid_n$	Cathode + heater + screen + suppressor + shields + metal parts + diode anodes + inactive units, etc.	$Anode_m$
	Coupling (between units)	Grid of one unit	Anode of other unit	All other elements, shields, metal parts, etc.
	Coupling (between units)	Anode of one unit	Anode of other unit	All other elements, shields, metal parts, etc.
	Coupling (General)	Specified electrode of one unit	Specified electrode of other unit	All other elements, shields, metal parts, etc.
	Electrode (1)	Electrode	All other elements shields, metal parts, etc. connected to ground.	
Grounded-Grid Types	Cathode-Anode (heater grounded)	Cathode	Anode	All other elements, shields, metal parts, etc.
Grounded-Grid Types	Input (heater grounded)	Cathode	Grid + heater + screen + suppressor + shields + metal parts, etc.	Anode, diodes, inactive unit(s).

/Table Continued Overleaf

Type of Valve	Capacitance	Measure Between		Connect to Reference Ground
Grounded-Grid Types	Output (heater grounded)	Anode	Grid + heater + screen + suppressor + shields + metal parts, etc.	Cathode, diodes, inactive unit(s).
Grounded Grid Types	Cathode-anode (heater live) (2)	Cathode + Heater	Anode	All other elements, shields, metal parts, etc.
Grounded Grid Types	Input (heater live) (2)	Cathode + Heater	Grid + screen + suppressor + shields + metal parts, etc.	Anode, diodes, inactive unit(s).
	Output (heater live)(2)	Anode	Grid + screen + suppressor + shields + metal parts, etc.	Cathode + heater, diodes, inactive unit(s).
Mixer	Signal grid(1) - anode	Signal grid(1)	Anode	All other elements, shields, metal parts, etc.
	Signal grid(2)-anode	Signal grid(2)	Anode	All other elements, shields, metal parts, etc.
	Input (1)	Signal grid(1)	All other elements, shields, metal parts, etc.	
	Input (2)	Signal grid(2)	All other elements, shields, metal parts, etc.	
	$Grid_n$ -anode (4)	$Grid_n$	Anode	All other elements, shields, metal parts, etc.
	$Grid_n$ -All (4)	$Grid_n$	All other elements, shields, metal parts, etc.	
	Output	Anode	All other elements, shields, metal parts, etc.	

/Table Continued Overleaf

Type of Valve	Capacitance	Measure Between		Connect to Reference Ground
	Coupling	Signal grid (1)	Signal grid (2)	All other elements, shields, metal parts, etc.
	Electrode (1)	Electrode	All other elements metal parts, shields, etc. connected to ground.	
Converter	Signal grid-mixer anode	Signal grid	Mixer Anode	All other elements, shields, metal parts, etc.
	R.F. Input	Signal grid	All other elements, shields, metal parts, etc.	
	Mixer Output	Mixer anode	All other elements, shields, metal parts, etc.	
	Osc. grid-Osc. anode	Osc. grid	Osc. anode	All other elements, shields, metal parts, etc.
	Osc. Input	Osc. grid	Cathode + heater + mixer anode + signal grid + shields + metal parts, etc.	Osc. anode
	Osc. Output	Osc. anode	Cathode + heater + mixer anode + signal grid + shields + metal parts, etc.	Osc. grid
	$Grid_n$ -$anode_m$ (4)	$Grid_n$	$Anode_m$	All other elements, shields, metal parts, etc.
	$Grid_n$-All (4)	$Grid_n$	All other elements, shields, metal parts, etc.	
	Osc. Input (3)	Osc. grid	All other elements, shields, metal parts, etc.	

/Table Continued Overleaf

Type of Valve	Capacitance	Measure Between		Connect to Reference Ground
	Osc. Output (3)	Cathode	Heater + mixer anode + Signal grid + osc. anode + shields + metal parts, etc.	Osc. grid
	Osc. grid-cathode (3)			
	(a)	Osc. grid	Cathode	All other elements, shields, metal parts, etc.
	(b)	Osc. grid	Cathode + heater	All other elements, shields, metal parts, etc.
	Osc. Grid-mixer anode (3)	Osc. grid	Mixer anode	All other elements, shields, metal parts, etc.
	Osc. Grid-All except Cathode (3)	Osc. grid	Mixer anode + signal grid + osc. anode + heater + shields + metal parts, etc.	Cathode
	Coupling	Osc. grid	Signal grid	All other elements, shields, metal parts, etc.
	Coupling	Osc. Anode	Signal grid	All other elements, shields, metal parts, etc.
	Electrode(1)	Electrode	All other elements, shields, metal parts, etc. connected to ground.	
	$Grid_n$-earth (4)	$Grid_n$	Cathode, filament shields and all other elements etc.	$Anode_m$
	$Anode_m$-earth (4)	$Anode_m$	Cathode, filament shields and all other elements etc.	$Grid_n$

See notes overleaf.

NOTES

(1) The capacitance of an electrode is defined as the capacitance between one electrode and all other electrodes and metal parts connected to ground.

(2) Measurements apply to grounded-grid types normally operating with radio frequency voltage between heater and earth in circuit applications.

(3) Applies to converters normally operated with radio frequency voltage between cathode and earth.

(4) The subscripts n or m identify the number of the grid or anode respectively.

Table II - Cathode Ray Tubes

Type of Valve	Capacitance	Measure Between		Connect to Reference Ground
Magnetic deflection and focus, or magnetic deflection, electrostatic focus	Cathode-All	Cathode	All other elements, shields, metal parts, etc.	
	Grid-All	Grid	All other elements, shields, metal parts, etc.	
	Anode 1-All	Anode 1	All other elements, shields, metal parts, etc.	
	External conductive coating	External conductive coating	Final anode	All other elements, shields, metal parts, etc.
Electrostatic deflection and focus; symmetric deflection	Cathode-All	Cathode	All other elements, shields, metal parts, etc.	
	Grid-All	Grid	All other elements, shields, metal parts, etc.	

/Table Continued Overleaf

Type of Valve	Capacitance	Measure Between		Connect to Reference Ground
	X1 - X2	X1	X2	All other elements, shields, metal parts, etc.
	Y1 - Y2	Y1	Y2	All other elements, shields, metal parts, etc.
	X1 - All	X1	All other elements, shields, metal parts, etc.	
	X2 - All	X2	All other elements, shields, metal parts, etc.	
	Y1 - All	Y1	All other elements, Shields, metal parts, etc.	
	Y2 - All	Y2	All other elements, shields, metal parts, etc.	
	X1 - All except X2	X1	All other elements, shields, metal parts, etc.	X2
	X2 - All except X1	X2	All other elements, shields, metal parts, etc.	X1
	Y1 - All except Y2	Y1	All other elements, shields, metal parts, etc.	Y2
	Y2 - All except Y1	Y2	All other elements, shields, metal parts, etc.	Y1
Electrostatic deflection and focus; asymmetric deflection	Grid-All	Grid	All other elements, shields, metal parts, etc.	
	X1 - All	X1	All other elements, shields, metal parts, etc.	

/Table Continued Overleaf

Type of Valve	Capacitance	Measure Between		Connect to Reference Ground
	Y1 - All	Y1	All other elements, shields, metal parts, etc.	

NOTES

(1) For cathode ray tubes the post-deflection accelerator(s) (intensifier electrode(s)) if present, shall float for all measurements, unless otherwise indicated.

(2) The inter-gun shield shall be considered an element of the gun being measured. When measuring the capacitance of any one gun of a multigun tube, all elements of the other gun shall be earth.

(3) (a) The grid (or modulator electrode) is called "Grid 1" in U.S.A..

(b) The anode 1 is called "Grid 2" in U.S.A., and so on.

(c) The U.K. symbols X1, X2, Y1, Y2 are equivalent to the U.S. symbols for deflectors (D1, D2, D3, D4) but do not relate to particular electrodes as do the U.S. symbols.

Table III - Gas Filled Valves

Type of Valve	Capacitance	Measure Between		Connect to Reference Ground
All Valves	Grid-anode	Grid	Anode	All other elements, shield, metal parts, etc.
	Grid-earth	Grid	Cathode + heater + shield grid + shields + metal parts, etc.	Anode
	Anode-earth	Anode	Cathode + heater + shield grid + shields + metal parts, etc.	Control grid
	Shield grid - Anode	Shield Grid	Anode	All other elements, shields, metal parts, etc.
	Shield grid - Earth	Shield Grid	Cathode + heater + shields + metal parts, etc.	Anode

Table IV - Photocells and Photomultipliers

Type of Valve	Capacitance	Measure Between		Connect to Reference Ground
Gas and Vacuum Types	Anode-cathode	Anode	Cathode + shields + metal parts, etc.	
Gas and Vacuum Twin Types	Anode-cathode (each unit)	Anode	Cathode + shields + metal parts, etc.	Anode and cathode of unit not under test.
	Coupling between units (cathode to cathode)	Cathode of one unit	Cathode of other unit	All other elements, shields, metal parts, etc.
	Coupling between units (anode to anode)	Anode of one unit	Anode of other unit	All other elements, shields, metal parts, etc.
Multiplier Types	Anode-All	Anode	All other elements, shields, metal parts, etc.	
	Anode-Last Dynode	Anode	Last Dynode	All other elements, shields, metal parts, etc.
	Electrode (1)	Electrode	All other elements, shields, metal parts, etc. connected to ground.	

NOTE

(1) The capacitance of an electrode is defined as the capacitance between one electrode and all other electrodes and metal parts connected to ground.

Table V - High Power Valves

Type of Valve	Capacitance	Measure Between		Connect to Reference Ground
Indirectly heated cathode types	Heater-cathode	Heater	Cathode	All other elements, shields, metal parts, etc. (2)
Diode	Anode-All	Anode	Cathode + heater + shields + metal parts	

Table Continued Overleaf

Type of Valve	Capacitance	Measure Between		Connect to Reference Ground
Triode, Tetrode, Pentode	Grid-anode	Grid	Anode	All other elements, shields, metal parts, etc. (2)
	Input	Grid	Cathode + heater + screen + suppressor + shields + metal parts, etc. (2)	Anode
	Output	Anode	Cathode + heater + screen + suppressor + shields + metal parts, etc. (2)	Grid
	Electrode (1)	Electrode	All other elements, shields, metal parts, etc. connected to ground (2)	
	Cathode-anode (grounded-grid)			
	(a)	Anode	Cathode + heater	All other elements, shields, metal parts, etc. (2)
	(b)	Anode	Cathode	All other elements, shields, metal parts, etc. (2)
	Input (grounded-grid)	Cathode + heater	Grid + screen + suppressor + shields + metal parts, etc. (2)	Anode
	Output (grounded-grid)	Anode	Grid + screen + suppressor + shields + metal parts, etc. (2)	Cathode, heater
Twin triode Tetrode, Pentode	Coupling between units (grid to anode)	Grid of one unit	Anode of other unit	All other elements, shields, metal parts, etc. (2)

/Table Continued Overleaf

Type of Valve	Capacitance	Measure Between		Connect to Reference Ground
	Coupling between units (anode to anode)	Anode of one unit	Anode of other unit	All other elements, shields, metal parts, etc. (2)
	Coupling between units (general)	Specified electrode of one unit	Specified electrode of other unit	All other elements, shields, metal parts, etc. (2)

NOTES

(1) The capacitance of an electrode is defined as the capacitance between one electrode and all other elements and metal parts connected to ground.

(2) For high-power vacuum types employing metal sleeve-type bases with the sleeves not connected internally to any base pin or electrode, the sleeve shall float for all measurements and shall not be connected to any measurement circuit as are other metal parts.

2.1.3. Conditions of Tests

2.1.3.1 For all valves, interelectrode capacitances shall be measured with the cathode cold and with no direct voltages present unless otherwise specified.

2.1.3.2 For all valves, interelectrode capacitances shall be measured using the standard capacitance sockets and standard cap connectors described in Clauses 2.2 and 2.4. The socket face plate on the standard socket shall be earthed. In those cases where the terminals do not fit the standard sockets or cap connectors, connections shall be made directly to such terminals by using flexible shielded leads. Shielding on the connecting leads shall be carried as close to the terminals as possible. Shielding between terminals shall be used, where necessary, in order to have the capacitance measurement exclude the capacitance between terminals outside the base or bulb, just as is done in the case of standard shielded sockets and cap connectors.

Standard shields shall be used where specified.

When used, cylindrical shields shall sit squarely on, and concentric with the capacitance socket. When both a shield and a cap connector are used, the cap connector shall be concentric with the opening of the shield.

The dimensions and shapes of the standard shields have been selected to provide for maximum repeatability of measurement, ease of use, use on largest number of valve types to keep number of standard shields at minimum, and simple shield shapes that allow for maximum allowable variation in bulb dimensions. The standard shields do not necessarily provide therefore, the most perfect shielding for an individual outline.

2.1.3.3. All metallic objects and/or dielectric materials having a dielectric constant appreciably greater than air should be at such a distance from the valve under test that a change in the relative position between the object and the valve does not affect the capacity reading. This requirement does not apply to the use of the specified sockets and shields described in Clause 2.2 and Clause 2.3.

2.1.3.4. For cathode ray tubes, in the measurement of capacitance between the internal and external conductive bulb coatings, connection shall be made to the external coating by means of a conductive ring, such as braided bare wire, wrapped around the bulb at a point approximately at the coating centre. If the external coating has been applied in a patch so that it does not extend around the entire bulb wall, connection will then be made by means of a finger contact located at the approximate centre of the coating.

2.1.4. Capacitance Measuring Circuits

The radio frequency bridge method and the transmission method as shown in Paragraphs 2.1.4.1 and 2.1.4.2 shall be the standard methods of measuring interelectrode capacitances with the exceptions that for the measurement of the "capacitance of an electrode", the substitution method, Clause 2.1.4.3. and for the measurement of cathode ray tube capacitances, the measurement on an impedance bridge operating at 1000 c/s shall also be considered a standard method.

The first mentioned two methods are applicable throughout the usual range of valve capacitance, i.e. 0.0001 to 100 picofarads. In using these methods, the operating frequency shall be 0.4-5.0 x 10^6 cycles per second. The third method is applicable from 1-100 picofarads.

2.1.4.1. Radio-frequency Bridge Method

A bridge circuit for the measurement of direct interelectrode capacitances of a valve is shown by way of example in Figure 1. A stable oscillator, such as a crystal-controlled oscillator, supplies radio-frequency power through a closely coupled balanced transformer (T). Balance is indicated by a null-indicating device. For convenience the capacitors are ganged differentially so that increase of one capacitance is accompanied by an equal decrease of the other. Balance may then be effected by varying the two capacitance branches of the bridge until they are equal (when $C_X = C_1 - C_2$). Then at balance

$$C_x = 2\Delta C_1 = 2\Delta C_2$$

An advantage of the bridge over the transmission method is that the conductive components of the valve admittance due to insulation losses, getter deposits or other leakages, can be measured and balanced out independently of the capacitance reading.

The effect of capacitance to ground is negligible as Point B is at a centre location in the bridge, where capacitance does not influence balance, and the capacitance from C to ground is across a closely coupled low-impedance winding which does not affect the capacitance balance or the voltage applied to the bridge.

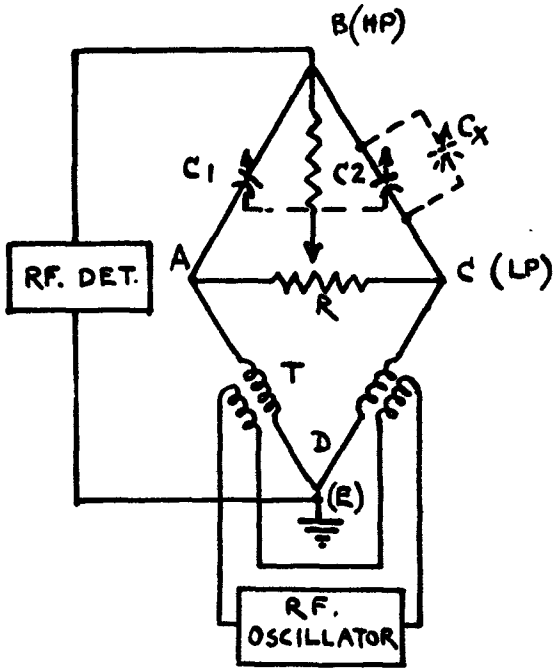

Fig. 1 (Radio Frequency Bridge)

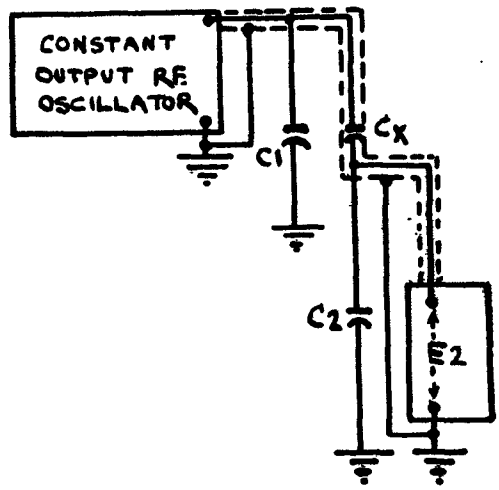

Fig. 2 (Transmission)

2.1.4.2 Transmission Method

A circuit for measuring the direct interelectrode capacitance of a valve is shown schematically by way of example in Figure 2. The radio frequency oscillator voltage is attenuated according to the range desired. The current in the unknown valve capacitance is amplified and measured by a valve voltmeter or is measured by a compensation method.

The amplifier input is attenuated in conjunction with the oscillator output so that the various ranges may be obtained. The oscillator-output and amplifier-input attenuators may be operated from a common control and calibrated in convenient decade steps. It is to be noted that large capacitances are required across the input and output so that the effects of the valve capacitances shunted across the input and output is negligible. The device is calibrated by using a known standard capacitance or a resistor of negligible shunt capacitance which may be calibrated in position. It is necessary to shield the parts from one another to eliminate stray capacitances because there is no way of balancing them out with this method. (Errors may be introduced as a result of conductance in shunt with the capacitance being measured).

2.1.4.3. Substitution Method

This method is only to be used for measuring the "capacitances of an electrode" (See Note 1, page 10). Fig. 3 gives a circuit for the substitution method.

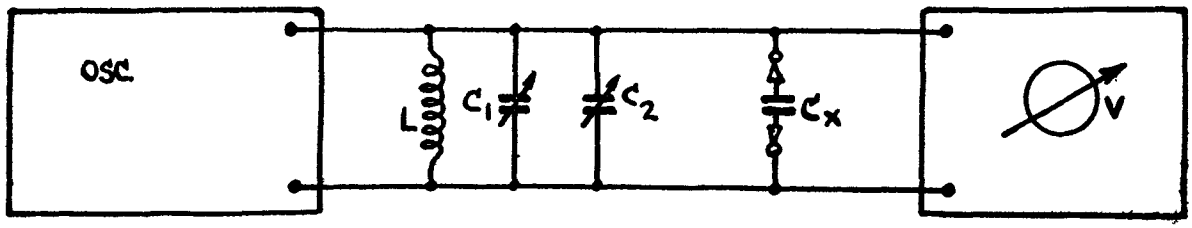

Fig. 3 (Substitution)

A stable oscillator "OSC", supplies radio-frequency power to the tuning circuit consisting of the coil L, the variable capacitor C_1 and the calibrated variable capacitor C_2. The circuit is tuned with capacitor C_1 as indicated by the maximum reading of the voltmeter V.

The capacitance Cx which is to be measured is then inserted in the circuit, and the circuit is again tuned for resonance, this time with the calibrated variable capacitor C_2. The difference between the readings of C_2 gives the capacitance value of Cx. With this measurement great care should be taken that stray capacitances to earth of the circuit proper are not altered by inserting the capacitance to be measured. Standard capacitance sockets mentioned as in Clause 2.2 will therefore be used.

2.2 Standard Capacitance Sockets

2.2.1 R.F. Bridge and Transmission Method Sockets

The following specifications shall be standard for capacitance sockets for the radio frequency bridge method and the transmission method for valves having bases indicated in Table VI.

(a) The construction and shielding of capacitance sockets and leads shall be such that when the holes for the insertion of the base pins and the spigots or locating lugs are covered with a grounded, flat metal plate, the capacitance between any one socket terminal and all other socket terminals tied together does not exceed 0.00010 picofarad for receiving valves, 0.0050 picofarad for cathode ray tubes, and 0.0005 picofarad for all other types. A spigot or locating lug contact (where present) shall be considered as an additional socket terminal.

(b) Holes for the accommodation of spigots or locating lugs shall have a maximum diameter stated in Table VI.

(c) The diameter of the holes for the insertion of the base pins (See Fig.4) shall be limited to the values shown in Table VI. The socket face plate shall be flat and shall have a minimum diameter provided complementary screening is present, so that when the holes in the socket face plate are covered with a grounded flat metal plate, the capacitance between all socket terminals tied together and an object simulating the inserted valve, shall be less than the capacitance values mentioned in Clause 2.2.1(a).

(d) A thin insulating film with a maximum thickness of 0.010" (0.254 mm) may be permanently attached to the face plate of capacitance sockets to provide insulation for ungrounded shielding members.

(e) The socket shall be constructed so that the base of the valve under test will seat on the face plate.

(f) Where a recess is specified on the standard drawing of a valve base, provision may be made for a projecting boss on the earth plate. When this modified socket is used it shall be stated. The boss shall have dimensions compatible with the minimum size recess specified for the valve. (For the B7G type of base, the boss dimensions shall be 0.200" (5.080 mm) diameter maximum and 0.018" (0.457 mm) height maximum).

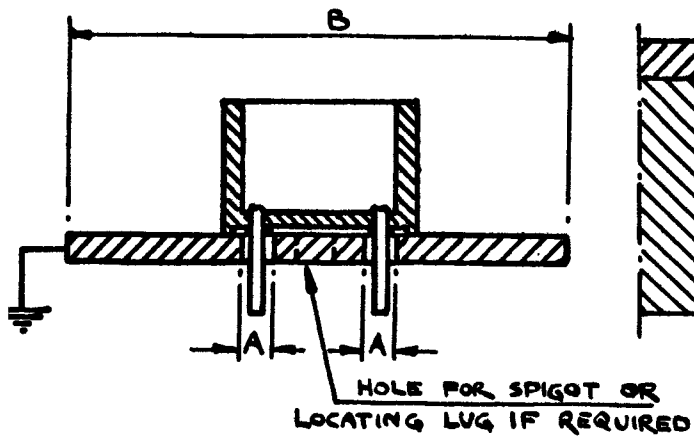

Fig. 4

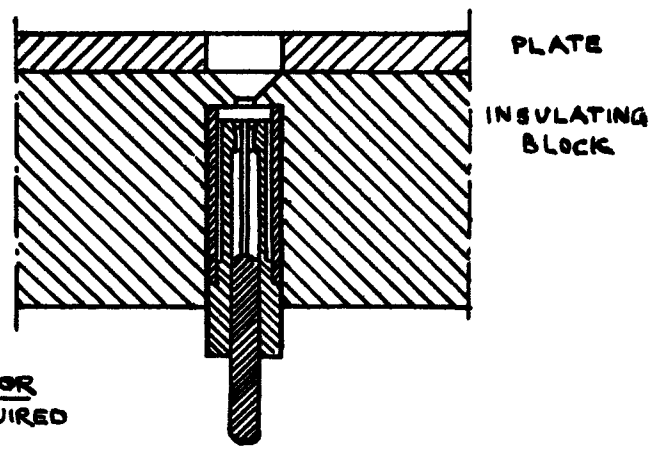

Fig. 5

2.2.2. Substitution Method Sockets (Fig. 5)

The following specifications shall be standard for capacitance sockets for the substitution method.

(a) The socket face plate shall be flat and have a minimum diameter of 200 mm (7.87").

(b) The diameter of the hole provided for the passage of the pin of which the capacitance will be measured is twice the diameter of the holes for the other pins as mentioned under (c).

(c) The diameter of holes provided for the pins of which the capacitance is not measured, corresponds with the maximum hole diameter as given in Table VI except for the B7G and B9A and B8A types for which the diameter is 2.0 mm (0.078"). These dimensions are toleranced plus and minus 5%.

(d) The contact for the pin of which the capacitance will be measured will have a construction as shown in Fig.5 to diminish the alteration of the capacitance of the socket due to the insertion of the valve.

TABLE VI

Diameter of holes for insertion of base pins and diameter of socket face plate of capacitance sockets for various valve bases.

Symbolic Name	Base Description	Maximum diameter (A) of holes for the insertion of base pins.	Minimum diameter (B) of socket face plate	Maximum diameter of holes for spigots or location lugs
		inches	inches	inches
UBM4	Medium 4-pin base	0.250	3	
UBM4B	Medium 4-pin base with bayonet	0.250	3	
UBM5	Medium 5-pin base	0.250	3	
B8-0	Octal base	0.175	3	0.500
B9G	9-pin glass base	0.093	3	0.500
B8G	8-pin glass base	0.093	3	0.500
B7G	7-pin miniature base	0.075	2 1/2	
B8A	8-pin miniature base	0.075	2 3/4	0.375
B9A	9-pin miniature base	0.075	2 3/4	
B12B	12-pin spigot base	0.250	3 1/2	0.700
-	Magnal 11-pin base	0.175	3	0.500
B14A	Diheptal 14-pin base	0.175	4	1.0
B12A	Duodecal 12-pin base	0.175	3	0.813
B11A	Submagnal 11-pin base	0.175	3	0.500
B3A	Pee Wee 3-pin base	0.175	2 1/2	
B7A	Septar 7-pin base			
	For thin pins	0.093		
	For thick pins	0.250		
B5D	Medium shell giant 5-pin base with bayonet	0.325	3	
B5E	Giant 5-pin base with metal skirt	0.325	3	
B5F	Giant 5-pin base	0.325	3	
B4F	Jumbo 4-pin base	0.375	3	
B4D	Super Jumbo 4-pin base with bayonet	0.375	3	

2.3 Standard Shields

Standard shields or cans shall be made as shown in Table VII. Material shall be copper, brass or an equivalent metal and shall have sufficient thickness to maintain shape under conditions of use.

In using the receiving valve shields, the shielded top cap connector shall slide inside the shield.

It is recommended that in future for any new receiving valves with parallel sided bulbs, the internal diameter of the shielding can shall be equal to the maximum diameter of the base or bulb and the length shall not be less than the overall seated height of the valve including tip or top cap.

TABLE VII

Recommended shields for use in the measurement of valve capacitances.

Figure No.	Shield No.	Applicable Valve Description
6	1	Valves with B7G base
7	2	Valves with B9A base (Medium and short bulb)
8	3	Valves with B9A base (long bulb)
9	4	Valves with B8A base
10	5	Valves with B5G/F and B7E/F base (T2X3)
11	6	Valves with B8D and B8D/F base
12	7	Valves with B5B/F base

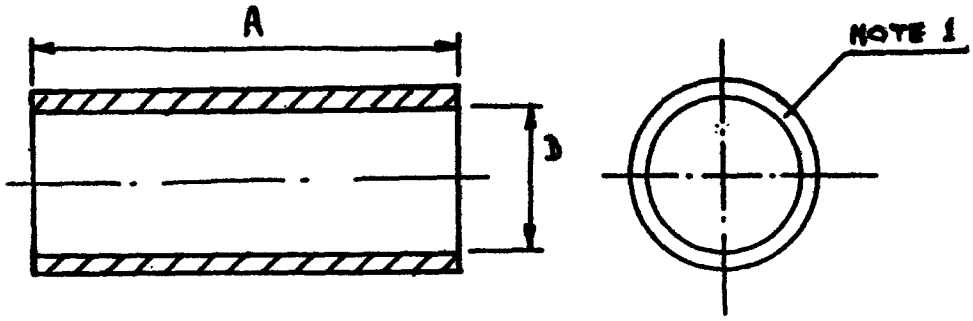

ref.	inches			millimetres		
	min.	nom.	max.	min.	nom.	max.
A	2 15/64	2 ¼	2 17/64	56.76	57.15	57.54
D	¾	¾	49/64	19.05	19.05	19.44

Note 1. A maximum radius of 3/32" (2.3 mm) is allowable on all internal edges.

Fig.6 Shield No.1

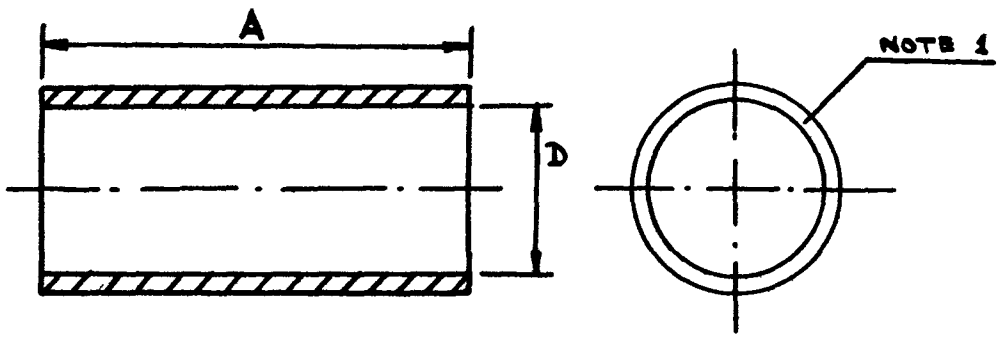

Ref.	inches			millimetres		
	min.		max.	min.	nom.	max.
A	2 15/64	2 ¼	2 17/64	56.76	57.15	57.54
D	7/8	7/8	57/64	22.22	22.22	22.62

Note 1. A maximum radius of 3/32" (2.3 mm) is allowable on all internal edges.

Fig.7 Shield No.2

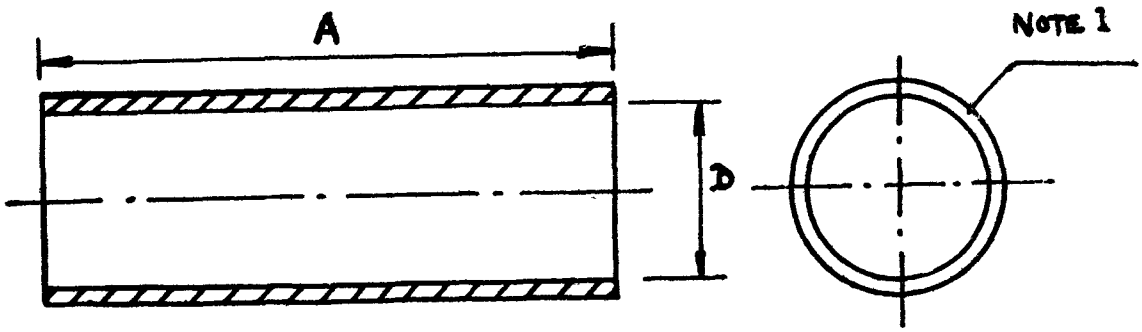

Ref.	inches			millimetres		
	min.	nom.	max.	min.	nom.	max.
A	2 63/64	3	3 1/64	75.81	76.20	76.59
D	7/8	7/8	57/64	22.22	22.22	22.62

Note 1. A maximum radius of 3/32" (2.3 mm) is allowable on all internal edges.

Fig.8 Shield No. 3

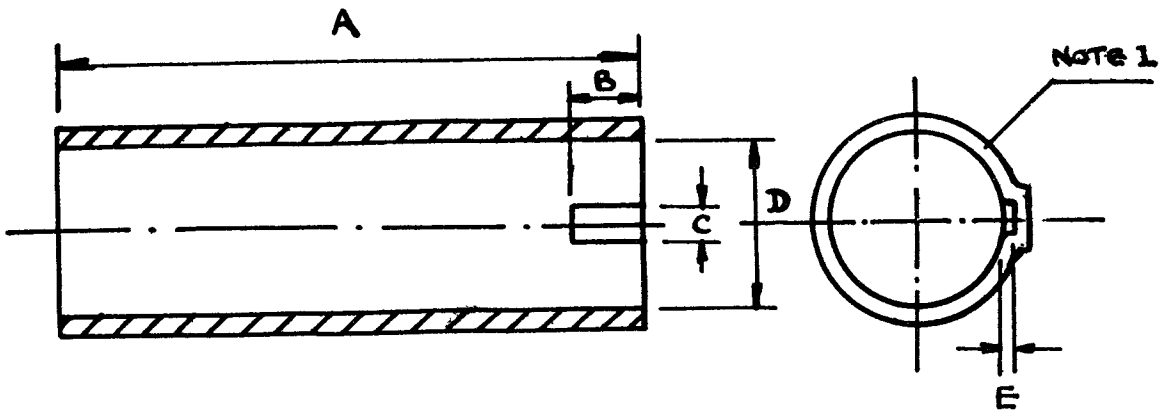

Ref.	millimetres			inches		
	min.	nom.	max.	min.	nom.	max.
A	77.5	78.0	78.5	3.052	3.071	3.090
B	9.5	10.0	10.5	0.375	0.394	0.413
C	4.0	4.5	5.0	0.158	0.177	0.196
D	22.5	22.5	23.0	0.886	0.886	0.905
E	2.0	-	2.5	0.079	-	0.098

Note 1 A maximum radius of 3/32" (2.3 mm) is allowable on all internal edges.

Fig.9 Shield No.4

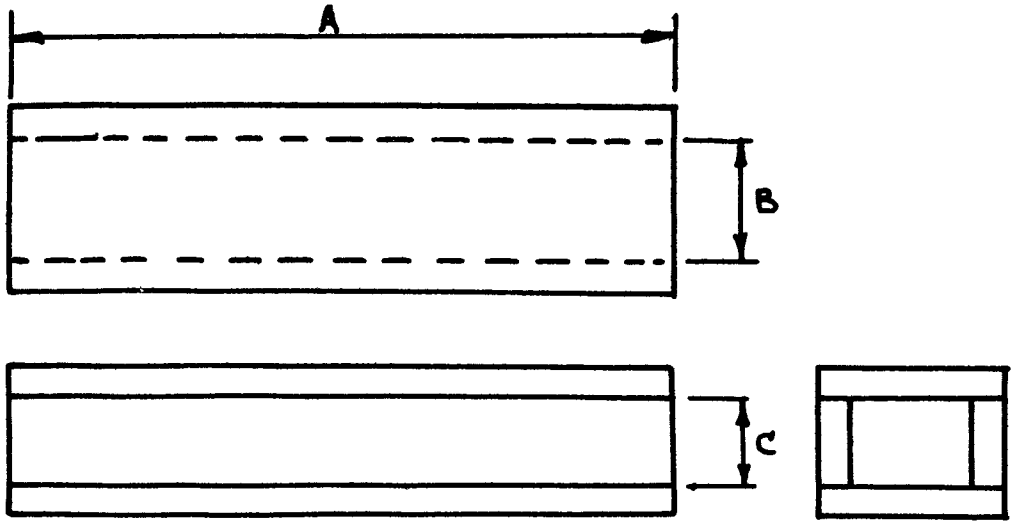

Ref	inches			millimetres		
	min	nom	max	min	nom	max
A		1.1750			44.450	
B	0.415		0.418	10.541		10.617
C	0.286		0.288	7.265		7.315

NOTE

1 A maximum radius of $^{3}/_{32}$" (2.3m.m.) is allowable on all internal edges.

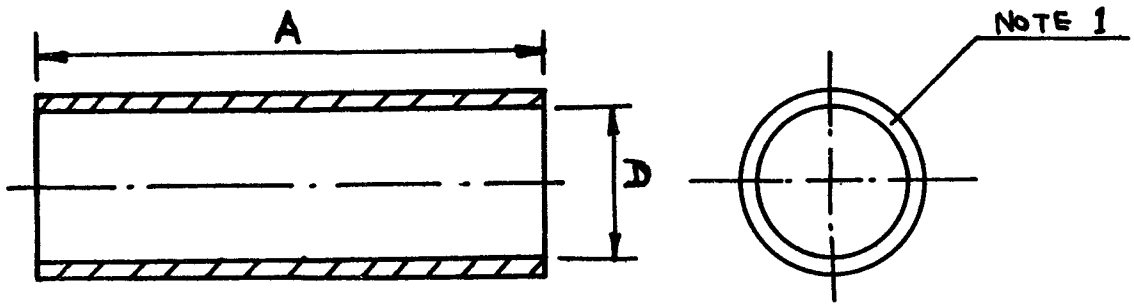

Ref.	inches			millimetres		
	min.	nom.	max.	min.	nom.	max.
A	1 23/64	1 3/8	1 25/64	34.53	34.93	35.32
D	0.402	0.405	0.408	10.211	10.287	10.363

Note 1. A maximum radius of 3/32" (2.3 mm) is allowable on all internal edges.

Fig. 11 Shield No. 6

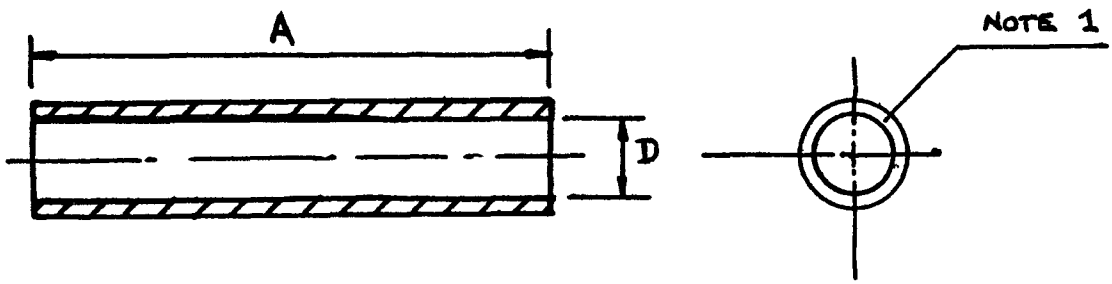

Ref.	millimetres			inches		
	min.	nom.	max.	min.	nom.	max.
A	34.0	-	35.0	1.339	-	1.377
D	5.45	-	5.55	0.2146	-	0.2185

Note 1. A maximum radius of 3/32" (2.3 mm) is allowable on all internal edges.

Fig. 12 Shield No. 7

2.4. Standard Cap Connectors. Standard Cap Connectors shall be made as shown in Fig. 13.

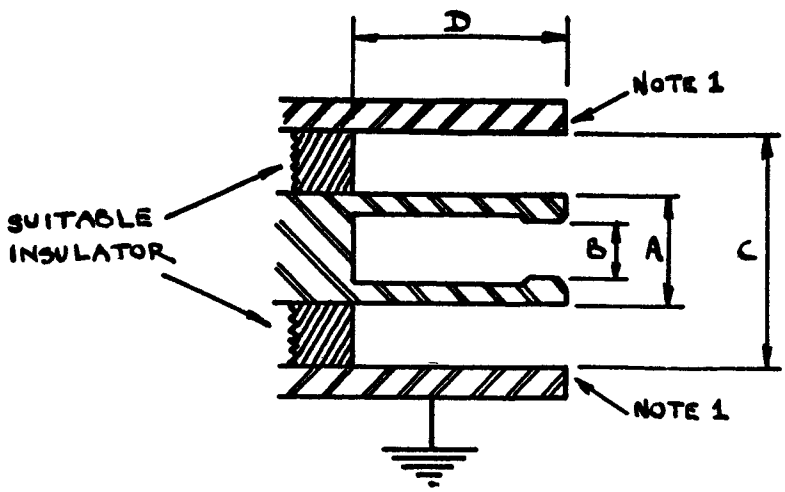

Fig.13. Standard Cap Connectors.

CT3 (U.S. Medium Cap Connector)						
	inches			mm		
ref.	min.	nom.	max.	min.	nom.	max.
A	41/64	21/32	43/64	16.28	16.67	17.06
B		0.556			14.122	
C	0.845	0.850	0.855	21.463	21.590	21.717
D	1/2			12.7		
CT2 (U.S. Small Cap Connector)						
ref.	min.	nom.	max.	min.	nom.	max.
A	7/16	29/64	15/32	11.12	11.51	11.90
B		0.352			8.941	
C	0.745	0.750	0.755	18.923	19.050	19.177
D	1/2			12.7		

/Table Continued Overleaf

CT1 (U.S. Miniature Cap Connector)						
ref.	min.	nom.	max.	min.	nom.	max.
A	5/16	21/64	11/32	7.94	8.33	8.73
B		0.242			6.147	
C	0.745	0.750	0.755	18.923	19.050	19.177
D	1/2			12.7		

Note 1. A thin insulating film may be placed on the surface indicated.

Note 2. For 7 pin miniature valves with top caps, the standard cap connectors cannot always be used.

APPENDIX IV

VALVE BASES AND CAPS

1. GENERAL

The Test Specification for a valve will state the type of base employed and will refer, as appropriate, to the relevant drawing in this Appendix.

1.1. The drawings herein are marked "Illustrative" or "Mandatory".

Illustrative Drawings are for bases which are in British Standard Specification BS448 and except where otherwise stated such bases shall satisfy the requirements of that Standard. The "Illustrative" drawings are given in this Appendix solely to assist in the recognition of types.

Mandatory Drawings give the information to which the bases shall be tested for the valves concerned.

1.2. Pins. In all cases dimensions for the positions of pins refer to the fixed ends. When the corresponding gauges are specified these dimensions are for information only and the pin dispositions shall be tested by using the specified gauges and not by any other methods of measurement.

1.3. The inspection of base dimensions shall be made on a sampling basis (See Section 6) at Inspection Level IB and AQL = 6.5%.

1.4. Certain mandatory outline dimensions may be given in the Test Specifications by reference to Appendix I.

2. PIN CONNECTIONS

The Pin Connections will be given in tabular form in the individual test specification by showing pin numbers against electrodes. The numbers corresponding to the pins or contacts in each type of base will be given either in the Base Pin Numbering Drawing in this Appendix or in the individual test specification. As from the date of this issue of Appendix IV the symbols used will be those given in BS.1409: "Letter symbols for Electronic Valves". Test Specifications of earlier date may have other symbols. (See Appendix II)

3. MATERIALS

3.1. Moulded Bases and Caps shall be of approved materials (see below). The material shall be stable and posses a high surface resistivity and resistance to voltage breakdown. Bases and caps shall be capable of withstanding the treatment specified in paragraph 10.1 of this specification without injurious effect. The insulation resistance after this treatment shall be in accordance with the requirements of Section 10.

3.2. A list of approved moulding materials for bases and caps is given in Table I below. In addition to these materials ceramics are approved for incorporation in certain other bases, e.g. B4A, B4D and B4F. Contractors wishing to use other materials should submit samples to The Director, S.R.D.E. for test. In cases where the valve rating permits a voltage of 1.0 kV or higher to appear between any two base contacts, the Approving Authority must be consulted before any change of base materials is made, even if the change is to another material in the list of approved moulding materials.

3.3. Soldered connections shall be mechanically and electrically sound after withstanding the treatment specified in paragraph 10.1 of this specification.

3.4. The contact surfaces of pins or side contacts etc. shall be of approved material. In the case of fabricated or moulded bases, the contacts, normally brass, shall be nickel plated to B.S. 1224 or silver plated to DTD.919 unless the finish is otherwise specified in the individual test specification.

TABLE I

LIST OF APPROVED MOULDING MATERIALS

Approved Moulding Materials		Manufacturer
Grade	Colour	
X262/2) X5283/3) X5337) X5418	Natural Natural Natural Natural	Bakelite Ltd., 12 Hobart Place, London, S.W.1.
A803	Natural	James Ferguson & Co. Ltd., Lee Park Works, Prince George's Road, Merton Abbey, S.W.19
3920	Natural	British Resin Products Ltd., 21 St. James Square, London, S.W.1.

4. CEMENT FOR BASING AND CAPPING

The cement used for securing the bases and or cap to the bulb shall be of approved material (see Table 2) and the method of basing shall be such that the completed valve satisfies the requirements of Section 12 of this Specification.

A list of approved cements for bases and caps and the method of use is given below. Contractors wishing to use other materials should submit samples to the Approving Authority for test.

The cements in Table 2 cannot be used for certain photo tubes and a few other electronic valves as the requisite heat treatment would damage the tubes. For such valves other materials and processes may be used subject to approval. Special precautions will be required in the packaging to prevent moisture from affecting the cement joints.

TABLE 2

LIST OF APPROVED CEMENTS FOR BASING AND CAPPING

Approved Cements	Composed of:-	Manufacturer
G17146 keyed with Bostic 1775	G1746 Bostic 1775	Bakelite Ltd., 12 Hobart Place, S.W.1. B.B. Chemical Co. Ltd. Ulverscroft Rd., Leics.
Footscray	JK5176 PR1221 MS996	British Resin Products Devonshire House, Mayfair Place, W.1. British Paints Ltd., Crew House, Curzon St., W.1. Midland Silicones Ltd., 19, Upper Brook St., London, W.1.
Resin Capping Paste 2656 (Spec. RV-X 004 18(E)) (used in conjunction with RV-X 004 22(E) or RV-X 019 95(E))	Resin Capping Paste 26 (Spec. RV-X 004 18/02(E)) Ethanol (Spec. NLN-X 000 06) Silicone Resin (Spec. RN-X 020 87(E))	N.V. Philips Gloeilampenfabrieken, Eindhoven, Holland.
Resin Capping Paste 29. (Spec. RV-X 004 18/01)	As for Resin Capping Paste 2656, except that more Ethanol is used to make the paste thinner for hand application. When baked, both pastes are the same.	
Resin Capping Paste 8 (Spec. RV-X 004 22(E)) (used in conjunction with RV-X 004 18(E))	Shellac (Spec. NLN-X 007 74/02) Levigated Chalk Dried (Spec. RV-X 004 92/09(E)) Dried Calcite (Spec. RN-X 004 92/15) Diphenylenepropane Resin (Spec. LT-X 017 13/01) Methyl Ethyl Hetone (Spec. NLN-X 006 09)	
Cellodammar Capping Paste (Spec. RV-X 019 95(E)) (used in conjunction with RV-X 004 18(E))	Cellodammar Resin Capping Paste (Spec. RV-X 019 94(E)) Isopropanol (Spec. NLN-X 016 00)) Silicone Resin (Spec. RN-X 020 87(E))	
Stopper Paste, Black R99 (Spec. RV-Z 600 41(E)) Used as a finishing filler between edge of base and wall of tube.	Nitrosynthetic Paint R67, Black (Spec. RV-Z 051 12(E)) Kaolin (Spec. RN-X 004 97(E))	

METHOD OF USE

G17146 Keyed with Bostic 1775

The Bostic 1775 should be applied with a brush to the glass envelope of the valve before basing and the G17146 to the base. The valve is then based in the normal manner for G17146 cement.

Footscray Cement

(a) Mixing

To make 1 lb. of Footscray Cement:-

(i) Mix 440 cubic centimetres (360 grammes) of JX5176 to a tacky solution with addition of 68 o.p. methylated spirit.

(ii) Add to the above 22 cubic centimetres (18 grammes) of prepared PR1221 rubber additive and mix.

(iii) Add to the above 24 cubic centimetres (20 grammes) of silicon varnish MS996.

(b) Curing Time

Approximately 10 minutes at 120°C cement temperature (not necessarily baking oven temperature).

(c) Working Life

It is recommended that this cement is mixed daily and used for a period not exceeding 10 hours after mixing.

Philips Pastes

Instructions for capping of bases and bottom outer screens for oscilloscope tubes are contained in N.V. Philips Specification RV-5-3-55/411(E) dated 26th May 1964.

5 INDEX OF DRAWINGS

The Drawings in Appendix IV are:-

Drawing No.	Drawing Title
1.1, 1.2, 1.3, 1.4	Valve Base Pin Numbering.
2	The Octal Base B8-0 (Illustrative)
3	The Mazda Octal Base B8-MO (Illustrative)
4	
5	British 4, 5, 7 and 9 Pin Bases (Illustrative)
6	Special 4-Pin Low Loss Base (L4) (Mandatory)
7	Transmitting Valve Base, 4-Pin Metal Shell (T4), (Mandatory)
8	B9G Base. (Illustrative)
9	B7G Base. (Illustrative)
10.	Valves with B3G Base. (Illustrative)
11.	3 Clip Base (CL3). (Mandatory)
12	B8G Base. (Illustrative)
13	Edison-Type Screw Lamp Caps. (Illustrative)
14	Bayonet Lamp Caps. (Illustrative)
15	B12D Base. (Illustrative)
16	B12B Base. (Illustrative)
17	B8E Base. (Formerly EM8). (Mandatory)
18	6 Clip Base (CL6). (Mandatory)
19	7 Clip Base (CL7). (Mandatory)
20	8 Pin Bayonet Base (PB8). (Mandatory)
21	B15A3 Base (Formerly 3-Pin Quindecal), (Mandatory)
22	B4D Base. (Mandatory)
22A	B4D Base Pin and Bayonet Position Gauge,(Mandatory)
23	B4F Base. (Illustrative)

24	B7A Base. (Illustrative)
25	B7D Valve Base. (Illustrative)
26	B9A Base. (Illustrative)
26A	B9A Pin Straightening Tool. (Mandatory)
26B	B9A Pin Position Gauge. (Mandatory)
27	B11A Base. (Illustrative)
28	B3A Base. (Illustrative)
29	B4A Base. (Mandatory)
30	B4B Base. (Illustrative)
31	B5A and B5A/F Bases. (Illustrative)
32	B5B and B5B/F Bases. (Illustrative)
33	B5D Base. (Illustrative)
34	B5E Base. (Illustrative)
35	B5F Base. (Illustrative)
36	B8A Base. (Illustrative)
37	
38	
39	B12A Base. (Illustrative)
40	B14A Base. (Illustrative)
41	BC4 Base. (Mandatory)
42	C11 Base. (Mandatory)
43	SC8 Base. (Mandatory)
44	
45	Magnal Base. (Mandatory)
46	B8F Base. (Mandatory)
47	B12E Base. (Mandatory)

48	American A4-5 and A4-9. (Mandatory)
49	American A4-10. (Mandatory)
50	American A5-6 and A5-11. (Mandatory)
51	American A6-7 and A6-12. (Mandatory)
52	American A7-8 and A7-13. (Mandatory)
53	American A7-14. (Mandatory)
54	B7B Base (Mandatory)
54A	B7B Pin Position Gauge (Mandatory)

DRAWING No.1·1
VALVE BASE PIN NUMBERING.

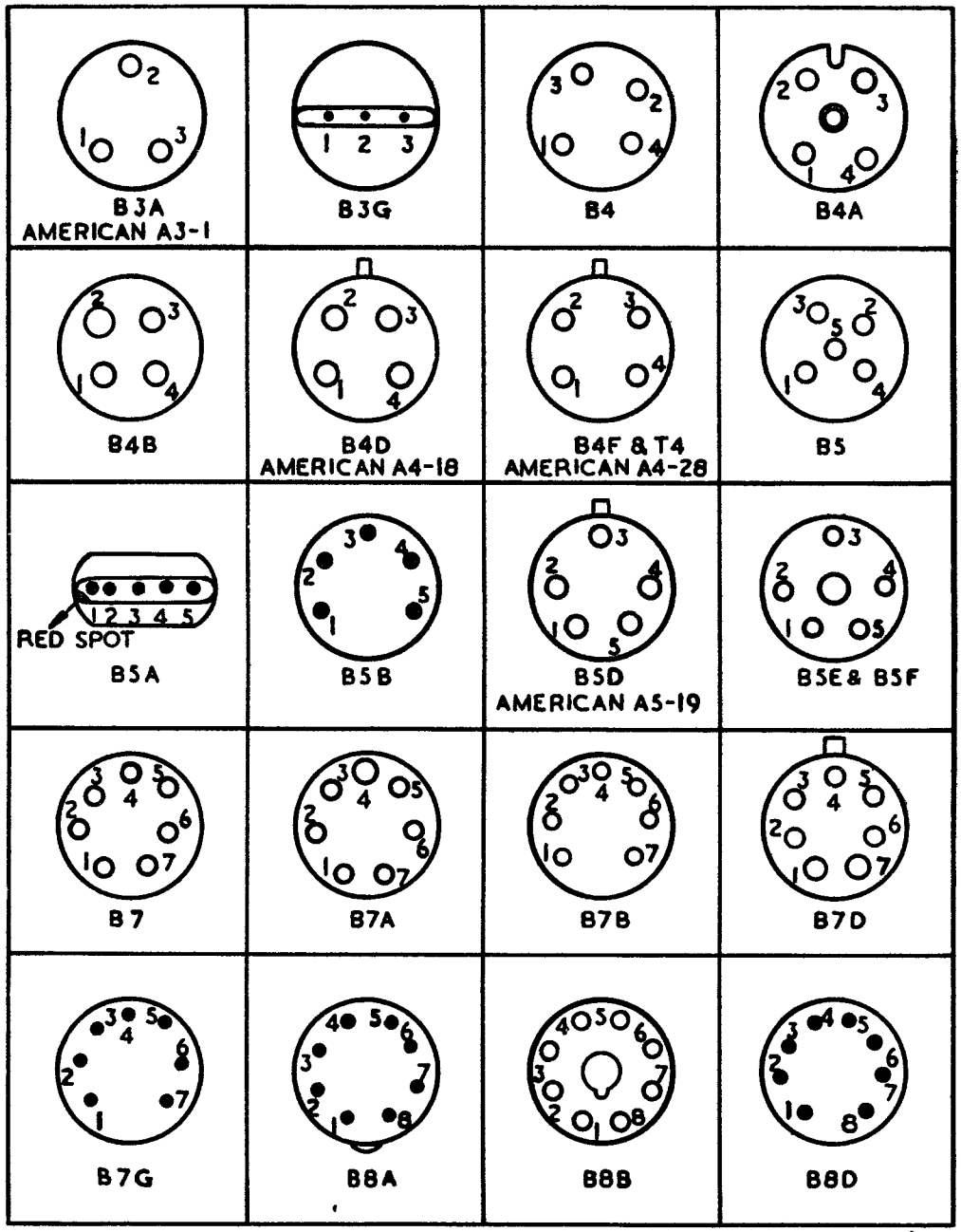

DEC.1955

K1001/A IV/D1·1

(222327)

DRAWING No1·2

VALVE BASE PIN NUMBERING

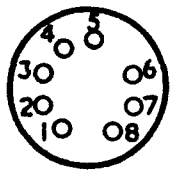

B8 E

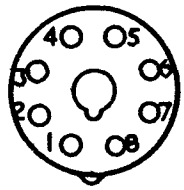

B8 G

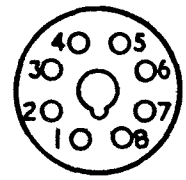

B8-O & B8-MO

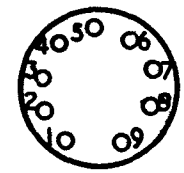

B9

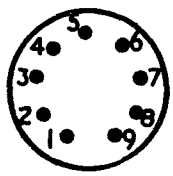

B9A

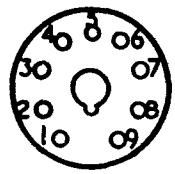

B9G

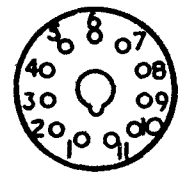

B11A & MAGNAL

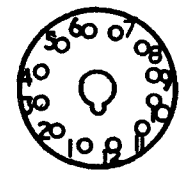

B12A & B12B

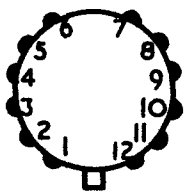

B12D

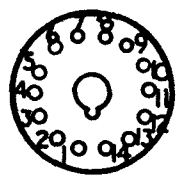

B14A

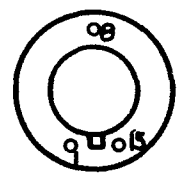

B15A3

DRAWING No1·3

VALVE BASE PIN NUMBERING

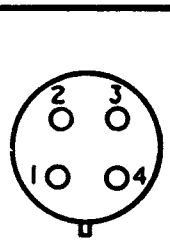

BC4

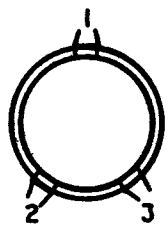

CL3

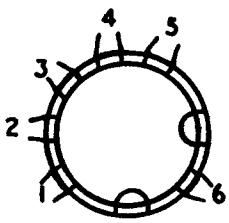

CL6

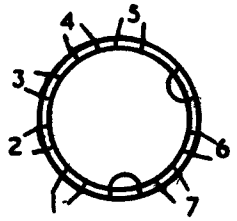

CL7

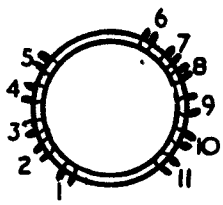

CL11

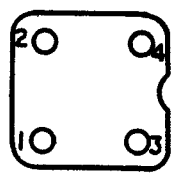

L4

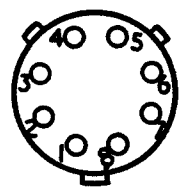

PB8

DRAWING No 1·4

VALVE BASE PIN NUMBERING

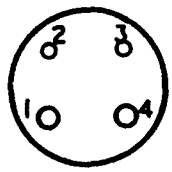 AMERICAN {A4-5 / A4-9	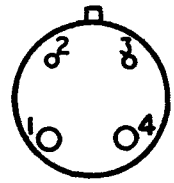 AMERICAN A4-10	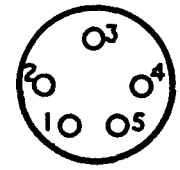 AMERICAN {A5-6 / A5-11	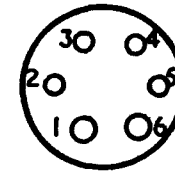 AMERICAN {A6-7 / A6-12
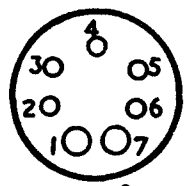 AMERICAN {A7-8 / A7-13	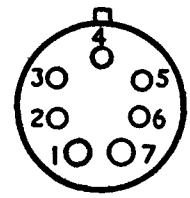 AMERICAN A7-14		

DRAWING. No. 2.

THE OCTAL BASE B8-O

ILLUSTRATIVE

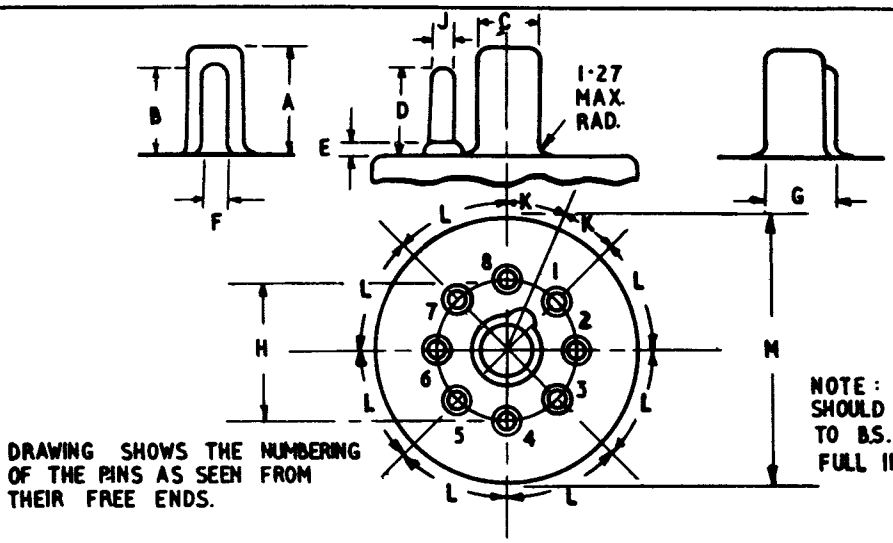

DRAWING SHOWS THE NUMBERING OF THE PINS AS SEEN FROM THEIR FREE ENDS.

NOTE : REFERENCE SHOULD BE MADE TO B.S. 448 FOR FULL INFORMATION

NOMINAL DIMENSIONS IN MM. EXCEPT WHERE OTHERWISE STATED.	A	B	C	D	E	F	G	H	J	K	L
	14·22	12·70	7·88	11·10	1·20 MAX.	2·16	9·10	17·45	2·362	22·5°	45°

DIAMETER "M" WILL BE ONE OF THE SIX LIMIT DIAMETERS SHOWN ON THE RIGHT. THIS DIMENSION IS THE MAXIMUM SHELL DIAMETER OF FINISHED VALVES AND IS TO ALLOW FOR DISTORTIONS, TOLERANCES ETC.	"M" DIMENSIONS TO BE ONE OF THE MAXIMUM SHOWN BELOW					
	(i)	(ii)	(iii)	(iv)	(v)	(vi)
THE RELEVANT MAXIMUM DIMENSION IS QUOTED IN THE INDEX TO ELECTRONIC VALVES SPECIFICATIONS, THE AMENDMENT TO OCTAL-BASED VALVE SPECIFICATIONS AND THE APPROPRIATE INDIVIDUAL VALVE SPECIFICATIONS WHERE THESE EXIST.	1·062"	1·187"	1·281"	1·313"	1·406"	1·720"

(40626)

DRAWING No 3

THE MAZDA OCTAL BASE B8-MO

ILLUSTRATIVE

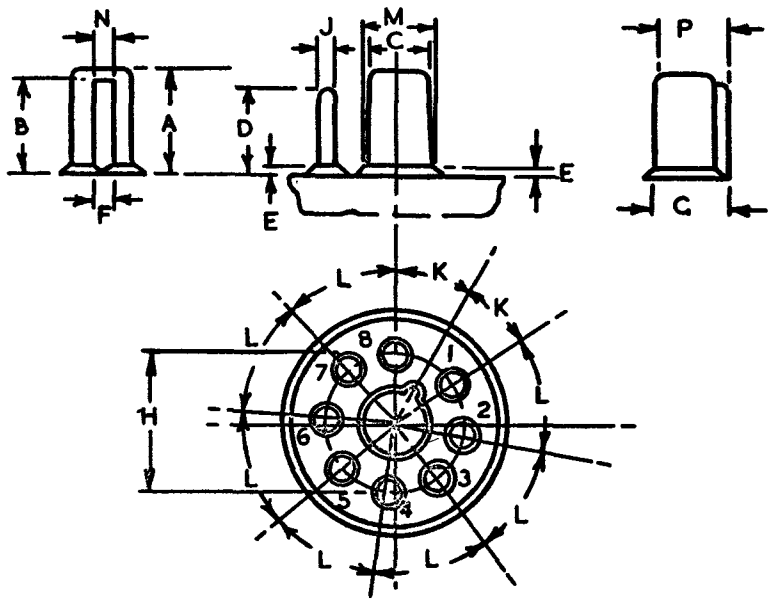

DRAWING SHOWS THE NUMBERING OF THE PINS AS SEEN FROM THEIR FREE ENDS

NOMINAL DIMENSIONS IN MM EXCEPT WHERE OTHERWISE STATED	A	B	C	D	E	F	G	H	J	K	L	M	N	P
	14·25	12·70	8·80	11·10	1·20 MAX	2·30	10·20	18·50	2·36	27·75	43·53	8·90	2·0	10·0

NOTE

REFERENCE SHOULD BE MADE TO B.S. 448 FOR FULL INFORMATION

3.5 Season Cracking in Brass or Bronze Base Sleeves

The test shall be applied to three unplated specimens.

The specimen shall be cleaned from oil and grease and immersed in a nitric acid solution consisting of 40 volumes of nitric acid, S.G. 1.42 made up to 100 volumes with distilled water, until a clean, well pickled surface is obtained. On removal from the pickling bath, the specimen shall be washed in water avoiding staining. It shall then be completely immersed while wet in a 0.5% mercurious solution, maintained at 15 to 25°C, for 10 minutes, and then washed in water followed by alcohol or acetone.

During this treatment the specimen shall not be subject to any rubbing or unnecessary pressure.

It shall then be allowed to stand for 24 hours, after which the specimen shall be visually examined when there shall be no evidence of cracking.

NOTE A stock of mercurious solution may be made from 100 c.c. of nitric acid, S.G.1.42 with 100g of mercurious nitrate crystals with distilled water added to make up one litre. One volume of this stock solution made up to 20 volumes with distilled water will give a 0.5% solution. The solution must be fresh for each specimen, and in quantity equivalent to one litre per pound of brass or bronze in the specimen.

DRAWING No. 5

BRITISH 4,5,7 & 9. PIN BASES

ILLUSTRATIVE

DRG 5·1
B4

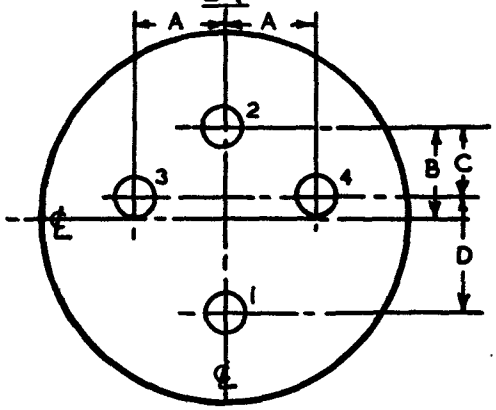

DRG 5·2
B5

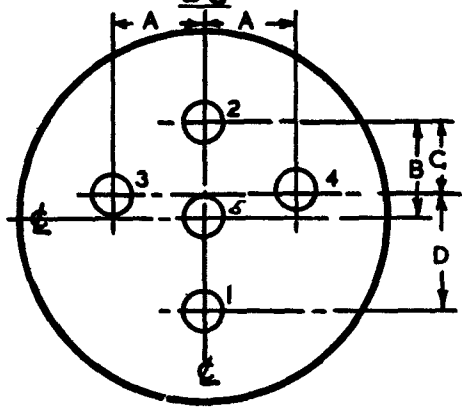

NOMINAL DIMENSIONS	A	B	C	D
DRG. 5·1	8·00	8·125	6·10	10·15
DRG. 5·2	8·00	8·125	6·10	10·15

DRG 5·3
B7

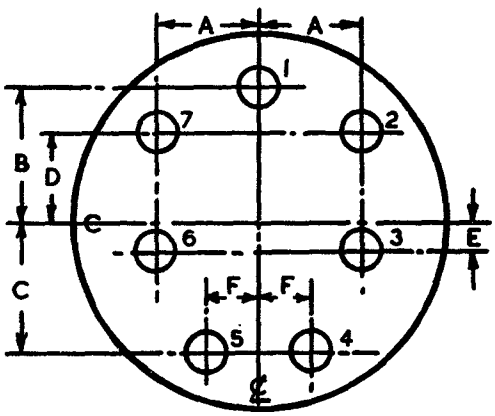

DRG 5·4
B9

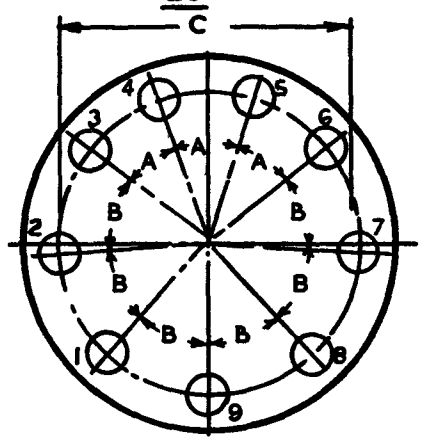

NOMINAL DIMENSIONS	A	B	C	D	E	F
DRG 5·3	9·10	12·0	11·12	7·94	2·19	4·5

NOMINAL DIMENSIONS	A	B	C
DRG 5·4	34°	43°	26·0

NOTES 1. DRAWINGS SHOW NUMBERING OF PINS AS SEEN FROM THEIR FREE ENDS AND THEIR NOMINAL SPACINGS.
2. REFERENCE SHOULD BE MADE TO B.S. 448 FOR FULL INFORMATION.
3. DIMENSIONS IN MM EXCEPT WHERE OTHERWISE STATED.

DRAWING No 6.

SPECIAL 4 - PIN LOW LOSS BASE. (L4)

MANDATORY.

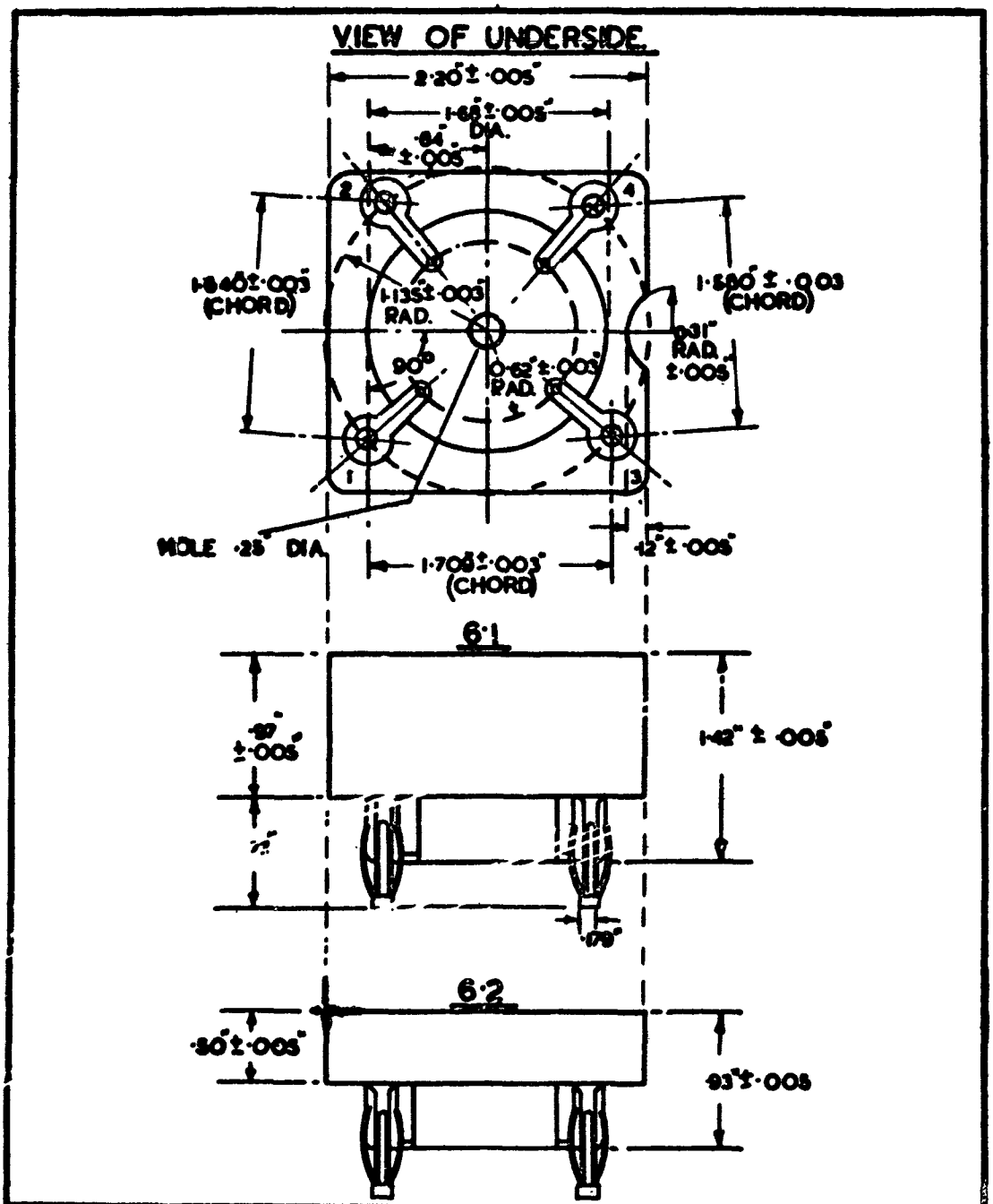

DRAWING No 7.

TRANSMITTING VALVE BASE, 4-PIN METAL SHELL. (T4)

MANDATORY.

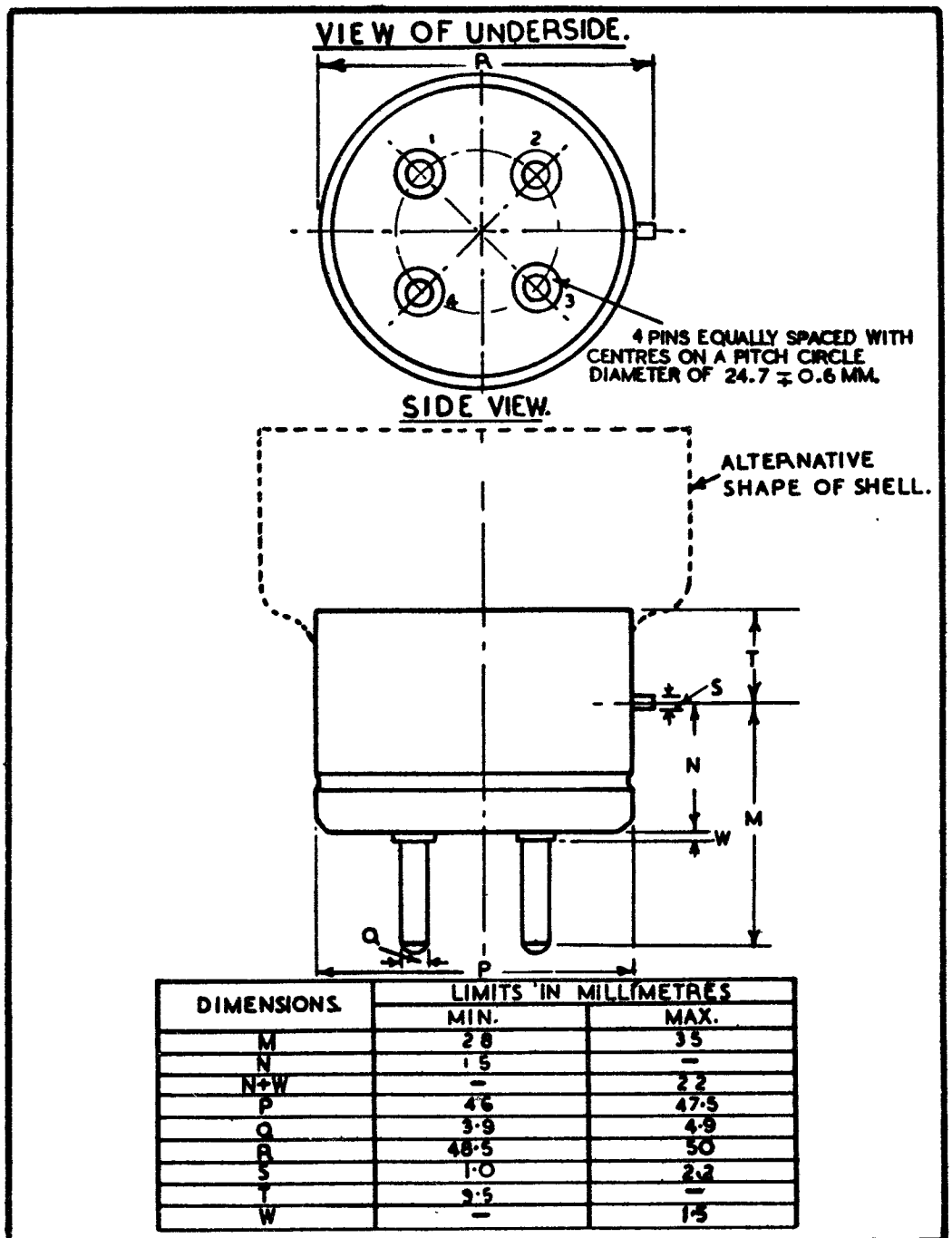

DIMENSIONS.	LIMITS IN MILLIMETRES	
	MIN.	MAX.
M	28	35
N	15	—
N+W	—	22
P	46	47·5
Q	3·9	4·9
R	48·5	50
S	1·0	2·2
T	2·5	—
W	—	1·5

DRAWING Nº 8

B9G BASE

ILLUSTRATIVE

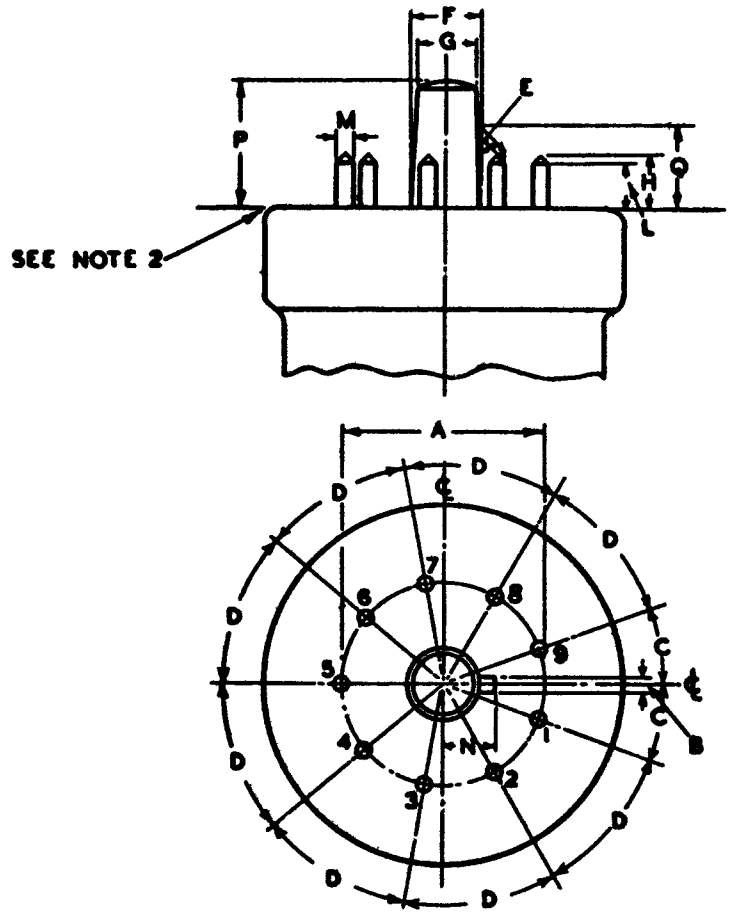

THE DRAWING SHOWS THE NUMBERING OF THE PINS AS SEEN FROM THEIR FREE ENDS.

NOMINAL DIMENSIONS IN MM. EXCEPT WHERE OTHERWISE STATED.	A	B	C	D	E	F	G	H	L	M	N	P	Q
	21·0	2·0	20°	40°	45°	6·5	6·4	6·0 MAX.	4·5	1·1	9·0	14·3	8·3 MIN.

NOTES:—

1. THE SPIGOT MAY BE TAPERED OR PARALLEL WITHIN THE LIMITS GIVEN.
2. DIMENSIONS MEASURED FROM THE UNDER SURFACE OF THE BASE OR FROM THE TURNED-OVER SHOULDER IF PRESENT.
3. IT IS PREFERABLE THAT THE ENDS OF THE PINS SHALL BE TAPERED AND/OR ROUNDED.
4. REFERENCE SHOULD BE MADE TO B.S.S. 448–1947 FOR FULL INFORMATION.

DRAWING No. 9
B7G BASE
ILLUSTRATIVE.

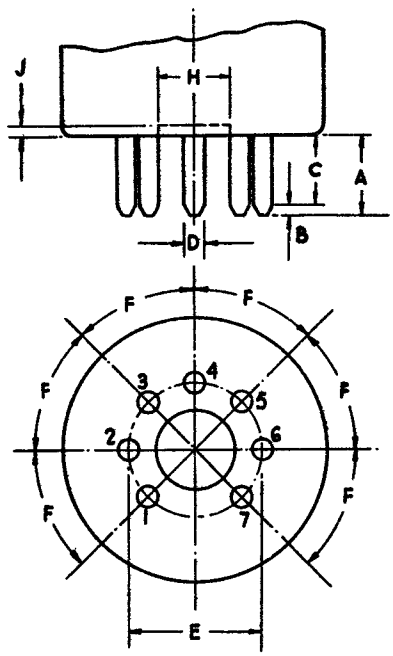

DIMENSIONS	
A	0·28 IN. MAX.
B	0·015 IN. MIN.
C	0·187 IN. MIN.
D	0·040 IN. NOM.
E	0·375 IN. NOM.
F	45° NOM.
H	0·222 IN. NOM.
J	0·018 IN. MIN.

NOTES

NOTE 1. THE DIMENSIONS FIXING THE POSITION OF THE PINS REFER TO THE FIXED ENDS OF THE PINS. THE PIN DISPOSITION SHALL BE CHECKED BY MEANS OF A GAUGE AS SHOWN IN FIG. B7G/1.2., B.S.448

NOTE 2. THE TIPS OF THE PINS SHALL BE TAPERED OR ROUNDED.

NOTE 3. REFERENCE SHOULD BE MADE TO BS 448 FOR FULL INFORMATION.

DRAWING No 10

VALVES WITH B3G BASE

ILLUSTRATIVE

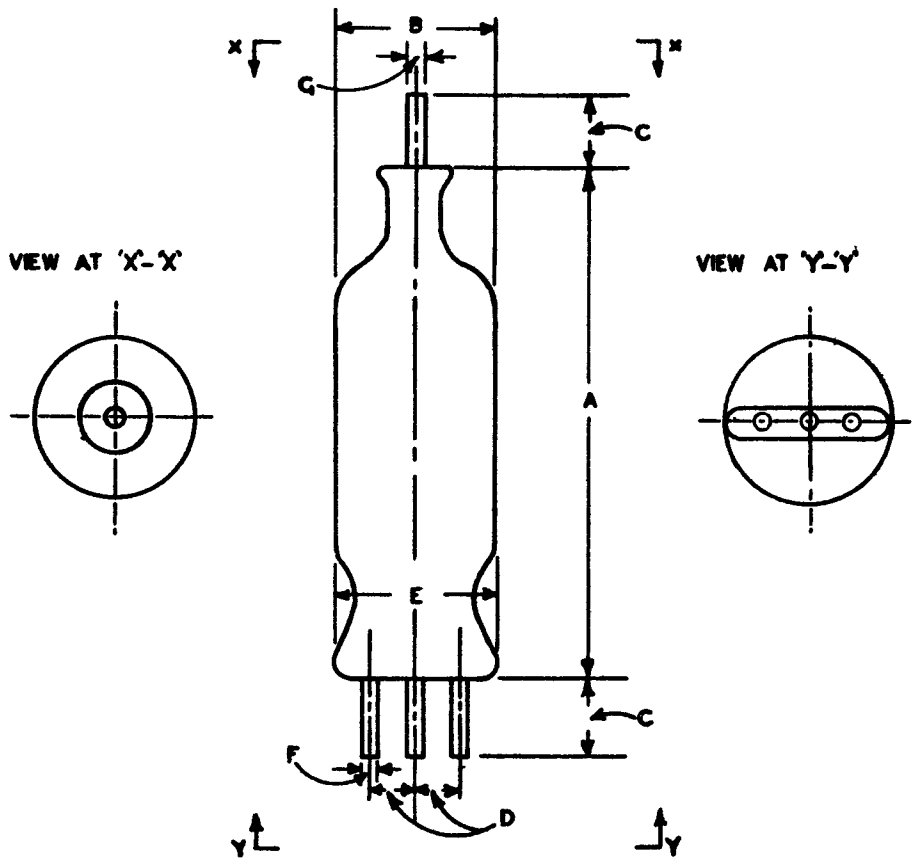

THE DIMENSIONS ON THE DRAWING FIXING THE POSITION OF THE PINS REFER TO THE FIXED ENDS OF THE PINS.

NOM. DIM. IN MM EXCEPT WHERE OTHERWISE STATED.	A	B	C	D	E	F	G
	36·0	12·0 MAX.	5·5	3·0	12·0 MAX.	1·0	0·8

NOTE:-
REFERENCE SHOULD BE MADE TO BS 448—1947 FOR FULL INFORMATION.

DRAWING No. 11.

3 CLIP BASE (CL3)

MANDATORY

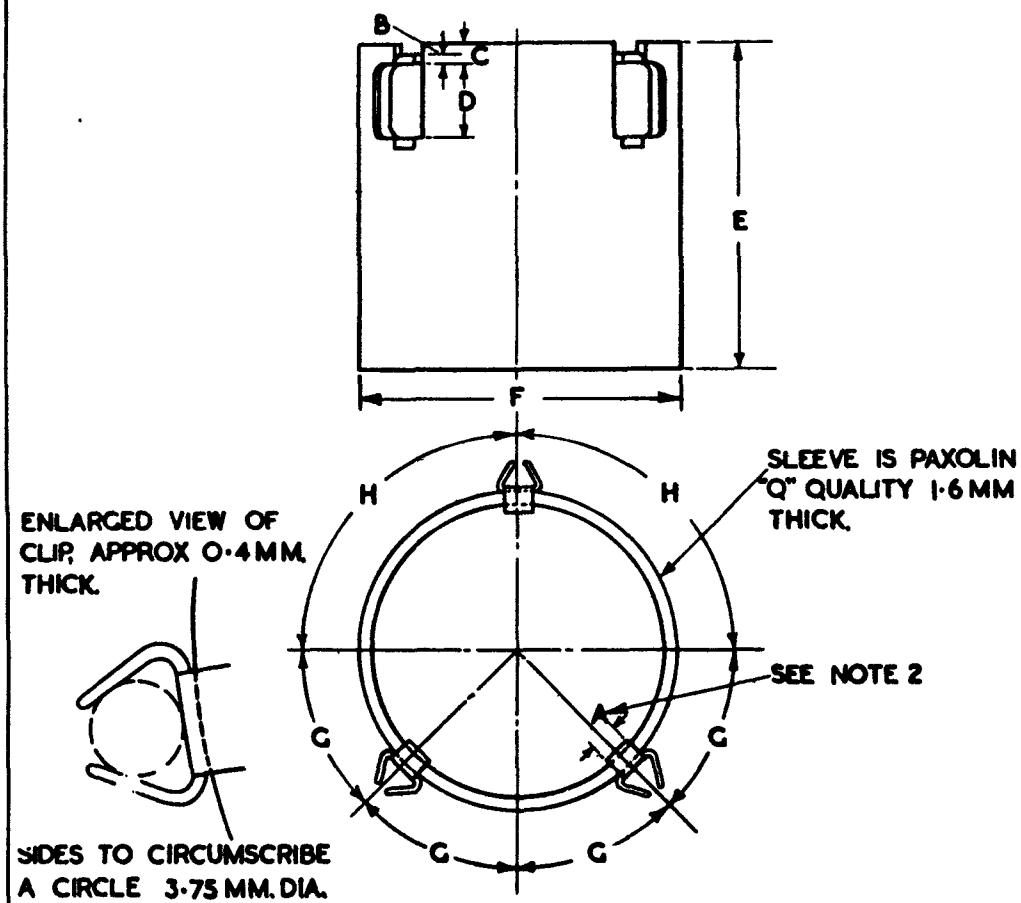

DIMENSIONS IN MM EXCEPT WHERE OTHERWISE STATED	A	B	C	D	E	F	G	H
	5·5±0·13	1·5 MAX	4·0 MAX	11·0±0·2	38·0±1·0	55·5±0·3	45°±0·75	90°±0·75

NOTES

1. THIS BASE IS DESIGNED FOR USE WITH PINS OF 4·2 MM. DIA. ON A P.C.D. OF 60·6 ± 0·25 MM.
2. DIMENSION "A" REFERS TO THE SLOT IN THE PAXOLIN INTO WHICH THE CLIP IS FITTED.

DRAWING No. 12.

B8G BASE.

ILLUSTRATIVE.

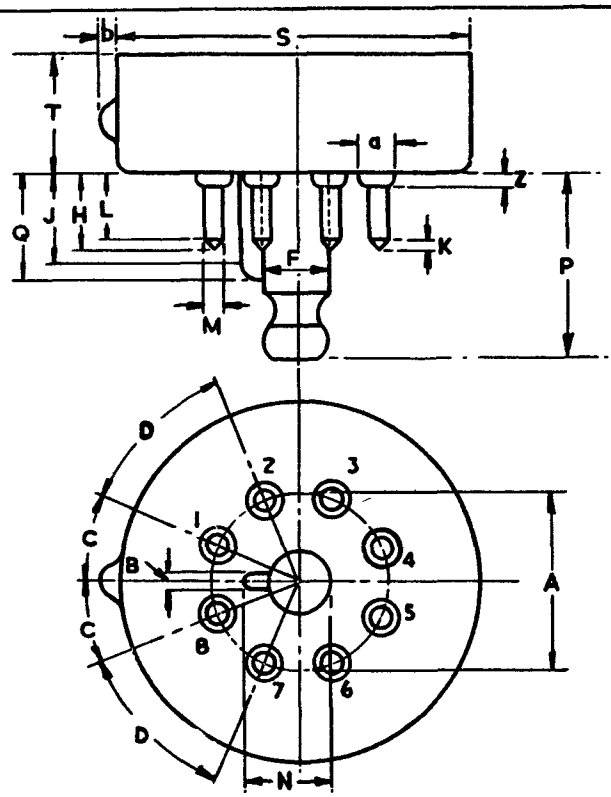

NOMINAL DIMENSIONS IN INCHES EXCEPT WHERE OTHERWISE STATED.					
A	0·687	J	0·235 MIN.	Q	0·274
B	0·080	K	0·015 MIN.	S	1·179
C	22½°	L	0·156 MIN.	T	0·50
D	45°	M	0·050	Z	0·030 MAX.
F	0·262	N	0·307	a	0·075 MAX.
H	0·220MAX.	P	0·534	b	0·040 MAX.

NOTES.

1. DIMENSIONS HJLPQZ ARE MEASURED FROM THE SOLE OF THE BASE, OR THE TURNED OVER SHOULDER IF PRESENT.
2. THE ENDS OF THE PINS MAY BE TAPERED OR ROUNDED.
3. DIMENSIONS FIXING PIN POSITIONS REFER TO THE FIXED ENDS OF THE PINS.
4. THE BOSS (DIMENSION b) IS OPTIONAL.
5. REFERENCE SHOULD BE MADE TO B.S. 448 FOR FULL INFORMATION.

DRAWING No. 13

EDISON-TYPE SCREW LAMP CAPS
ILLUSTRATIVE

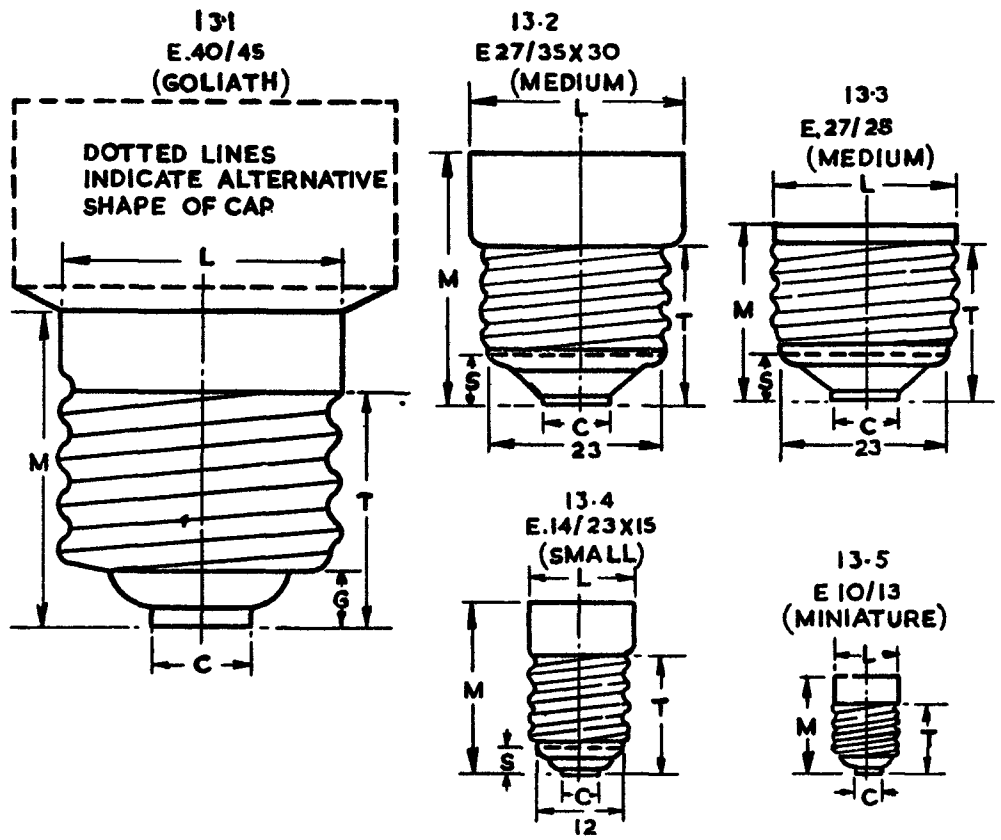

DRAWING	L	M	C	T	G	S
	NOM	NOM	NOM	MIN.	NOM.	NOM.
13·1	39	45	16	34·0	8·5	—
13·2	30	35	10·5	22·0	—	7·5
13·3	26	25·5	10·5	22·0	—	7·5
13·4	15	23·5	6	16·0	—	4
13·5	9·3	13·5	3·75	9·5	—	—

NOTES:-
1. REFERENCE SHOULD BE MADE TO B.S. 98 1934 FOR FULL INFORMATION
2. DIMENSIONS IN MM.

DRAWING Nº 14

BAYONET LAMP CAPS
ILLUSTRATIVE

14·1
B22
(NORMAL)

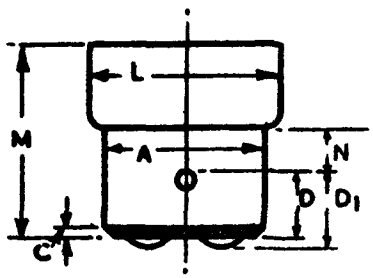

14·2
B15d
(SMALL-DOUBLE CONTACT)

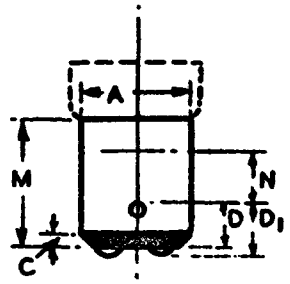

NOMINAL DIMENSIONS IN MM.	DRG. Nº	A	C	D	D_1	L	M	N
	14·1	21·95	1·5	6·5	8·0	26·2	25·5	8·0
	14·2	15·14	1·5	6·25	7·51	—	17·5	7·0

NOTE:- REFERENCE SHOULD BE MADE TO B.S.52-1941 FOR FULL INFORMATION.

DEC 1947

DRAWING No. 15
B12D BASE
ILLUSTRATIVE.

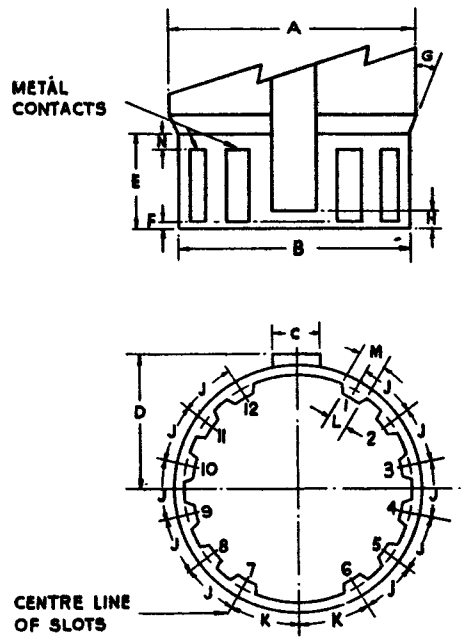

DIMENSIONS			
	INCHES		
	MIN.	MAX.	NOM.
A	2·751	2·822	——
B	2·579	2·630	——
C	0·495	0·535	——
D	1·501	1·560	——
E	1·031	1·093	——
F	0·043	0·250	——
G	——	——	30°
H	0·125	0·187	——
J	——	——	24°
K	——	——	30°
L	0·325	——	——
M	0·22	0·26	——
N	——	0·125	——

NOTE 1. THE FACES OF THE METAL CONTACTS SHALL NOT LIE MORE THAN 0·02 IN. BELOW THE ADJACENT SURFACES OF THE MOULDING.

NOTE 2. REFERENCE SHOULD BE MADE TO BS. 448 FOR FULL INFORMATION.

DRAWING No. 16
B12B. BASE
ILLUSTRATIVE.

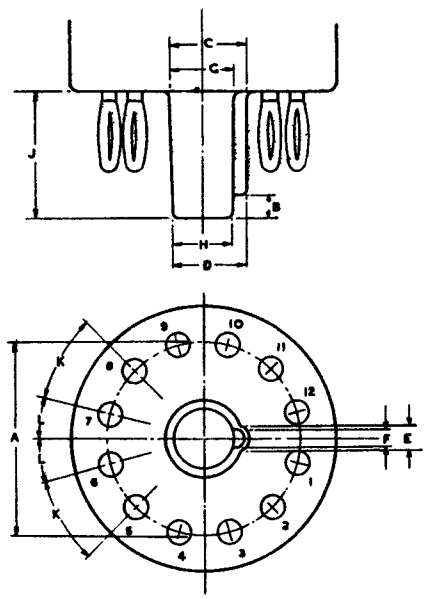

THIRD ANGLE PROJECTION

NOMINAL DIMENSIONS IN MILLIMETRES EXCEPT WHERE OTHERWISE STATED.			
A	35·00	G	12·00
B	3·00	H	11·85
C	14·00	J	22·00
D	13·73	K	30°
E	2·00	L	15°
F	1·78		

NOTES.

NOTE 1. FOR THE 10 PIN VARIANT, PINS 6 AND 12 ARE OMMITTED.

NOTE 2. THE DIMENSIONS FIXING THE POSITIONS OF PINS REFER TO THE FIXED ENDS OF PINS. THE PIN DISPOSITION SHALL BE CHECKED BY MEANS OF A GAUGE AS SHOWN IN FIG. B12B/1.2 B.S 448

NOTE 3. DIMENSIONS AND GAUGES FOR PINS ARE SPECIFIED IN SECTION 5, B.S. 448.

NOTE 4. REFERENCE TO BE MADE TO BS. 448 FOR FULL INFORMATION.

DRAWING No. 17

B8E BASE (FORMERLY EM8)
MANDATORY

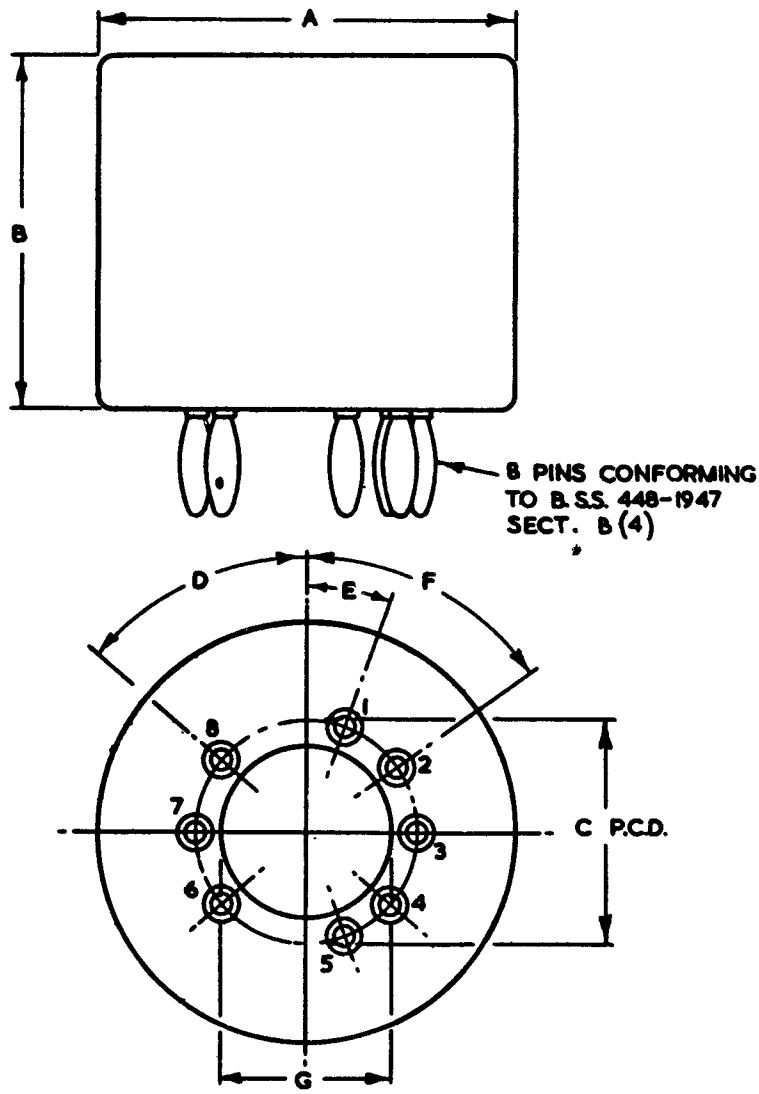

VIEW OF BASE FROM UNDERSIDE SHOWING THE PIN NUMBERINGS.

DIMENSIONS		A	B	C	D	E	F	G
LIMITS IN INCHES	MIN.	2·360	1·85	1·3105	50°	20°	55°	1·0
	MAX.	2·390	2·15	1·3145				

DRAWING N°18

6 CLIP BASE (CL6)

MANDATORY

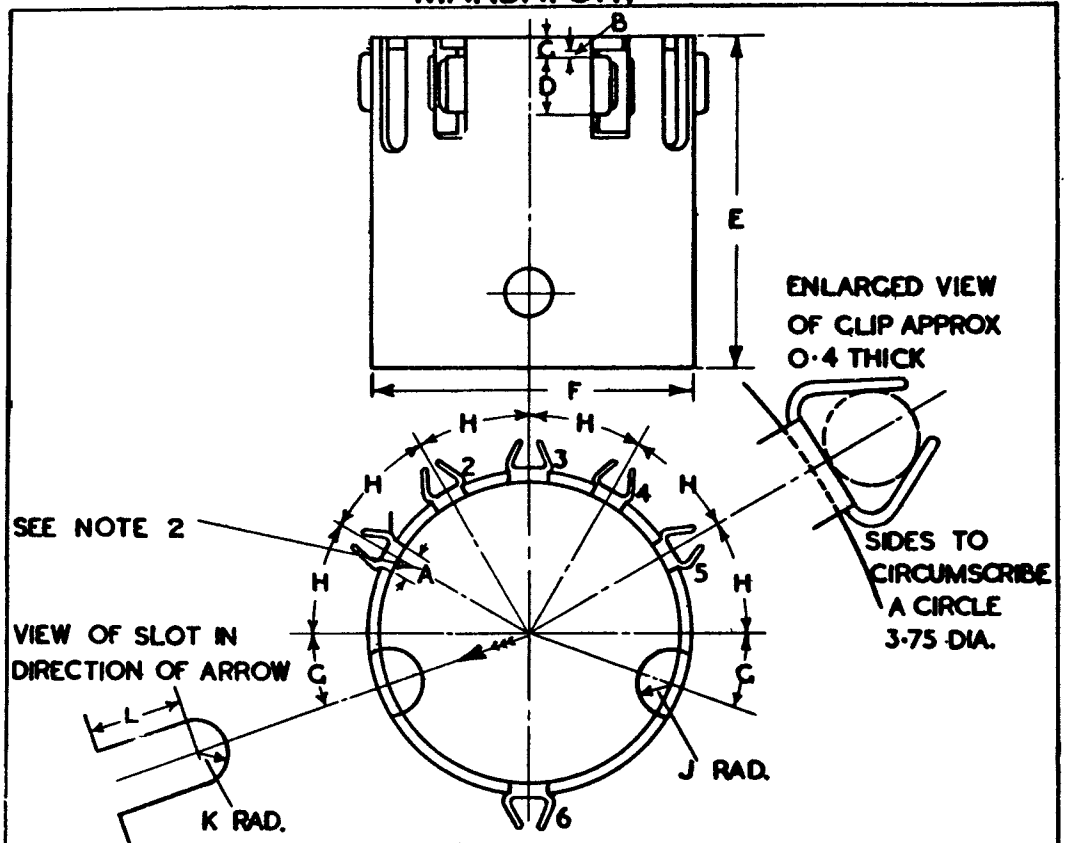

SLEEVE AND END PLATE PAXOLIN "Q" QUALITY 1·6 THICK.

DIMENSIONS IN MM EXCEPT WHERE OTHERWISE STATED	A	B	C	D	E	F	G	H	J	K	L
	5·5 ±0·13	1·5 MAX	4·0 MAX	11·0 ±0·2	57·0 ±0·5	55·5 ±0·3	20° ±0·75	30° ±0·75	4·75 ±0·25	4·75 ±0·25	16·35 ±0·6

NOTES

1. THIS BASE IS DESIGNED FOR USE WITH PINS OF 4·2 MM. DIA. ON A P. C. D. OF 60·6 ± 0·25 MM.
2. DIMENSION "A" REFERS TO THE SLOT IN THE PAXOLIN INTO WHICH THE CLIP IS FITTED.
3. DRAWING SHOWS THE NUMBERING OF THE CONTACTS WITH THE BASE VIEWED FROM THE UNDERSIDE.

DRAWING N°.19

7 CLIP BASE (CL7)

MANDATORY

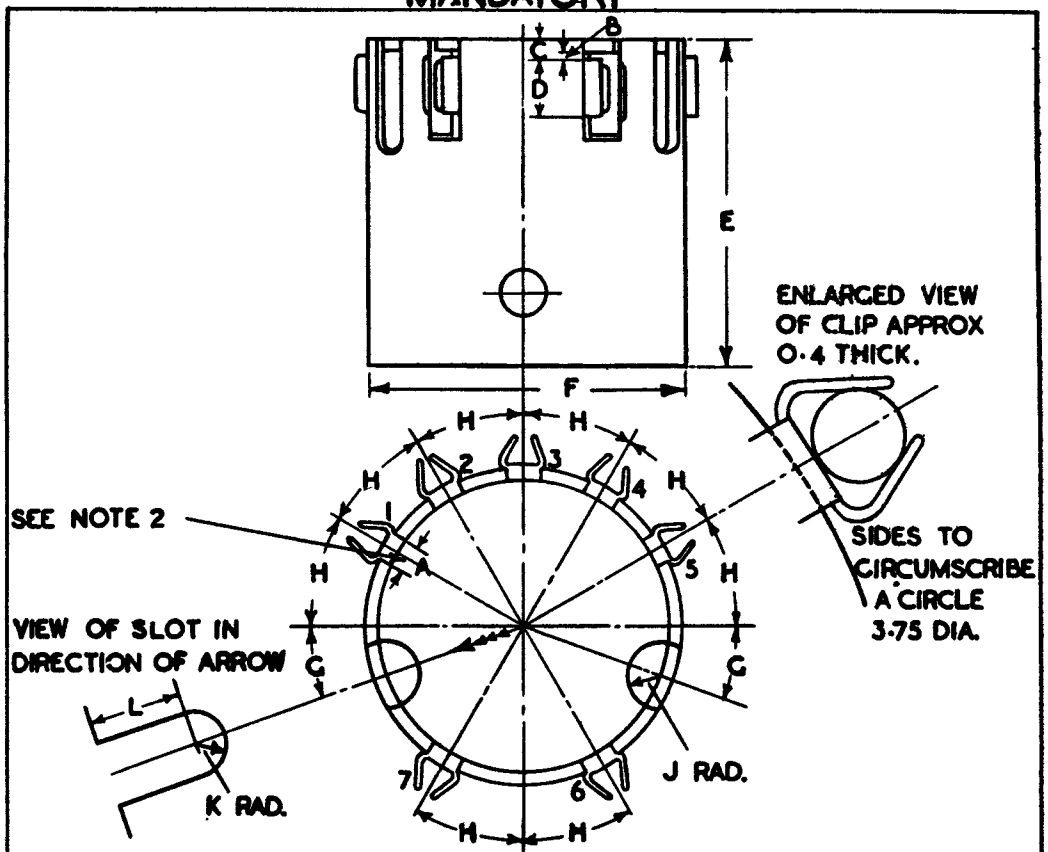

SLEEVE AND END PLATE PAXOLIN "Q" QUALITY 1·6 THICK

DIMENSIONS IN MM EXCEPT WHERE OTHERWISE STATED.	A	B	C	D	E	F	G	H	J	K	L
	5·5 ±0·13	1·5 MAX.	4·0 MAX.	11·0 ±0·2	57·0 ±0·5	55·5 ±0·3	20° ±0·75	30° ±0·75	4·75 ±0·25	4·75 ±0·25	16·35 ±0·6

NOTES

1. THIS BASE IS DESIGNED FOR USE WITH PINS OF 4·2 MM DIA ON A P.C.D. OF 60·6±0·25MM.
2. DIMENSION "A" REFERS TO THE SLOT IN THE PAXOLIN INTO WHICH THE CLIP IS FITTED.
3. DRAWING SHOWS THE NUMBERING OF THE CONTACTS WITH THE BASE VIEWED FROM THE UNDERSIDE.

DRAWING N° 20

8 PIN BAYONET BASE (P8B)

MANDATORY

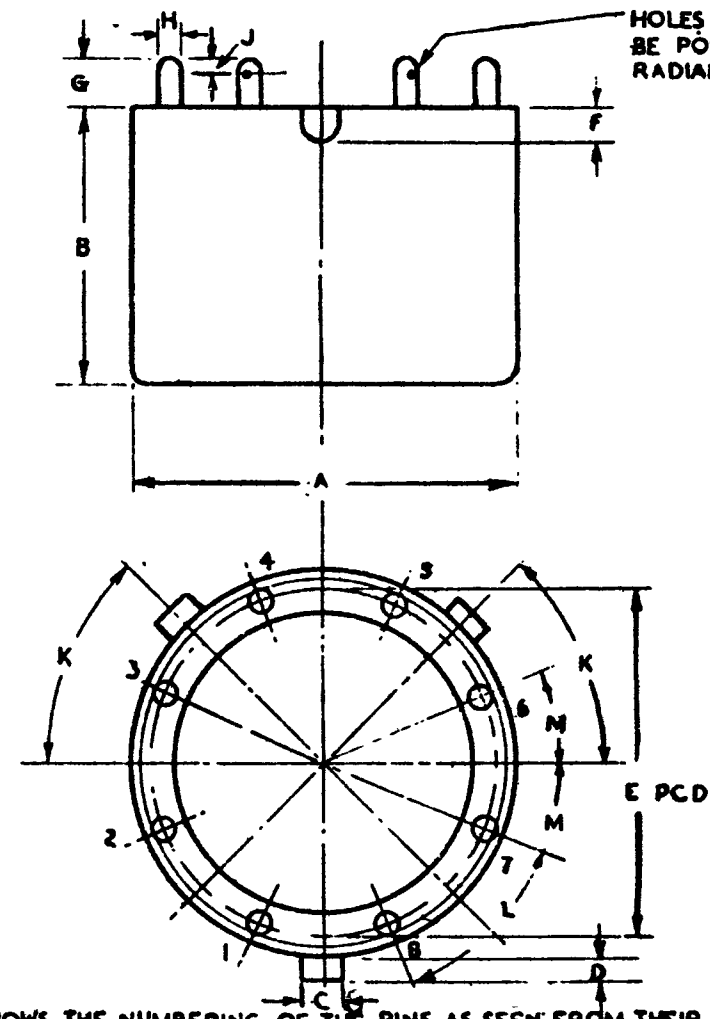

DRAWING SHOWS THE NUMBERING OF THE PINS AS SEEN FROM THEIR FREE ENDS.

DIMENSIONS		A	B	C	D	E	F	G	H	J	K	L	M
LIMITS IN MM.	MIN.	50·3	37·9	3·87	2·28	44·44	4·66	6·25	3·07	3·07	45°	45°	22½°
	MAX	50·5	38·1	4·07	2·48		4·86	6·45	3·27	3·27			

DEC 1947

DRAWING No 21

B15A3 BASE (FORMERLY 3-PIN QUINDECAL) MANDATORY.

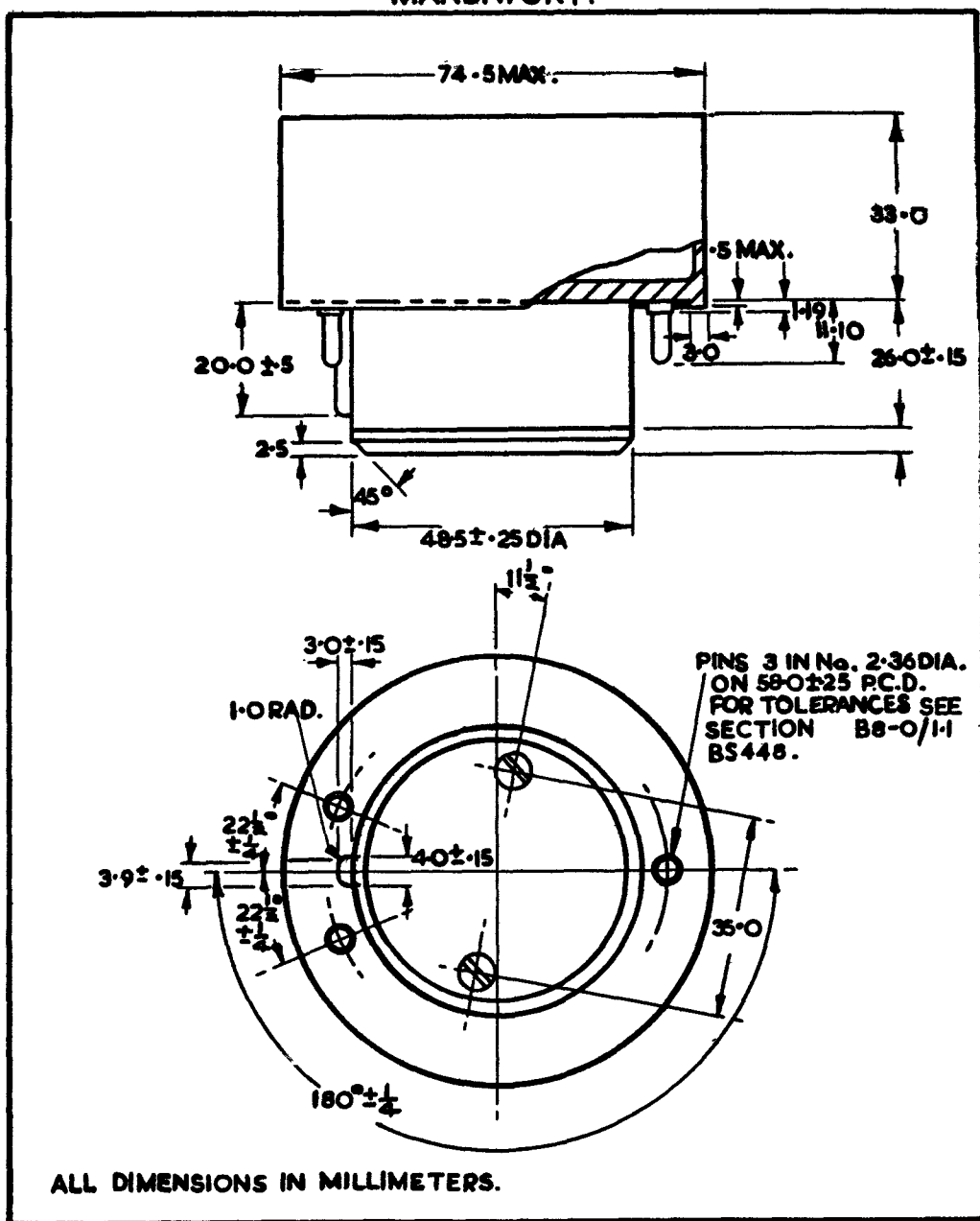

ALL DIMENSIONS IN MILLIMETERS.

DRAWING No. 22
B4D BASE
MANDATORY.

THIRD ANGLE PROJECTION

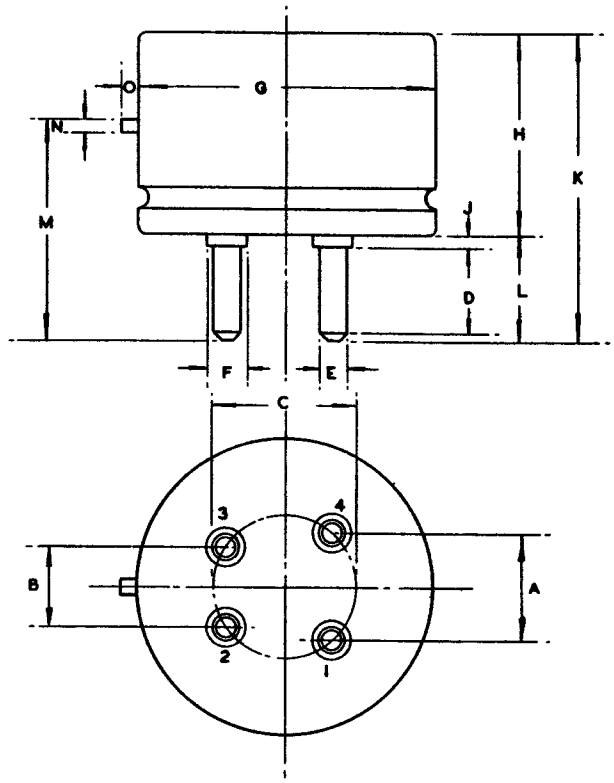

THE MILLIMETRE DIMENSIONS ARE DERIVED FROM THE ORIGINAL INCH DIMENSIONS

REF	DIMENSIONS							NOTES
	INCHES			DEGREES	MILLIMETRES			
	MIN	NOM	MAX	NOM	MIN	NOM	MAX	
A	—	·750	—	—	—	19·05	—	2
B	—	·562	—	—	—	14·274	—	2
C	—	1·000	—	—	—	25·40	—	2
D	0·575	—	—	—	14·61	—	—	
E	0·184	0·187	0·190	—	4·68	4·75	4·82	
F	—	—	0·260	—	—	—	6·60	
G	2·177	2·198	2·219	—	55·30	55·83	56·35	
H	—	1·438	—	—	—	36·53	—	
J	—	—	0·073	—	—	—	1·85	
K	—	2·125	—	—	—	53·98	—	1
L	—	—	0·718	—	—	—	18·23	1
M	1·526	1·546	1·566	—	38·8	39·25	39·75	1
N	—	—	0·082	—	—	—	2·08	
O	0·079	0·094	0·109	—	2·05	2·4	2·75	

NOTES

1. THE DIMENSIONS K, L, AND M MAY BE INCREASED BY 0·060 IN. (1·52 m.m.) MAX FOR SOLDER.
2. THE DIMENSION FIXING THE POSITIONS OF PINS REFER TO THE FIXED ENDS OF THE PINS, AND ARE GIVEN FOR INFORMATION ONLY. THE PIN DISPOSITION SHOULD BE CHECKED BY MEANS OF THE GAUGE SHOWN ON DRG No. 22 A
3. THE DRAWING SHOWS THE NUMBERING OF THE PINS AS SEEN FROM THEIR FREE ENDS.
4. THIS BASE IS THE AMERICAN SUPER JUMBO, JETEC TYPE A4-18.

DRAWING No.22 A

B4D BASE PIN & BAYONET POSITION GAUGE

MANDATORY.

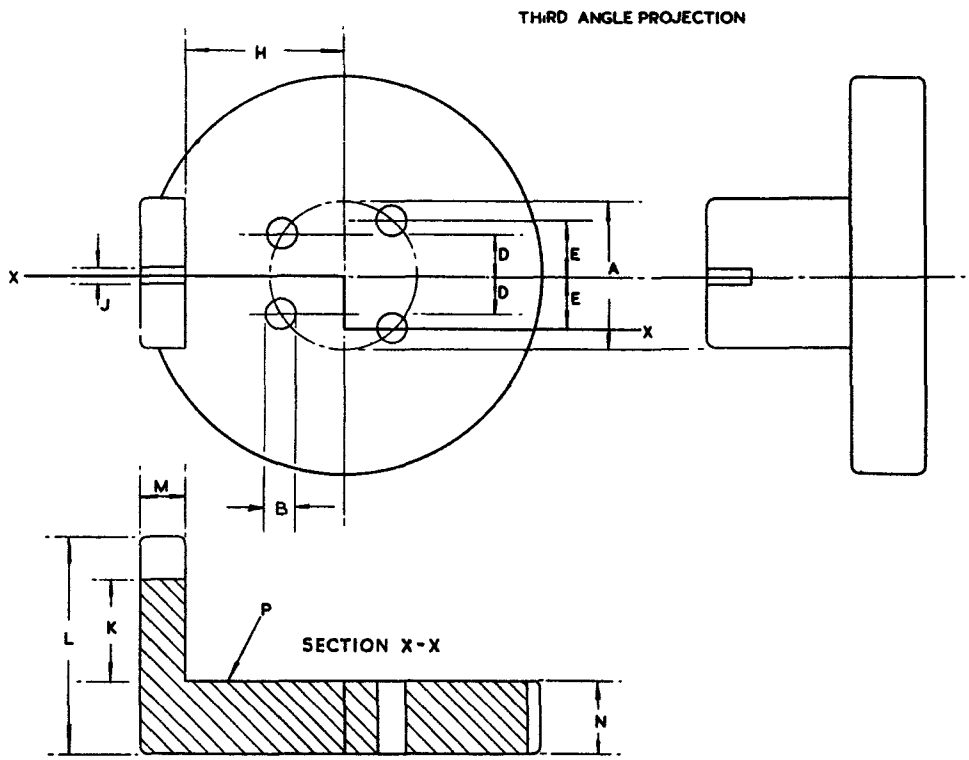

THE MILLIMETRE DIMENSIONS ARE DERIVED FROM THE ORIGINAL INCH DIMENSIONS

REF	DIMENSIONS							NOTES
	INCHES			DEGREES	MILLIMETRES			
	MIN	NOM	MAX	NOM	MIN	NOM	MAX	
A	—	1·000	—	—	—	25·40	—	
B	0·206	0·2065	0·207	—	5·234	5·244	5·256	J
D	—	0·281	—	—	—	7·137	—	
E	—	0·375	—	—	—	9·525	—	
H	1·110	1·110	1·115	—	28·195	28·195	28·320	
J	0·087	0·0875	0·088	—	2·210	2·222	2·234	1
K	—	0·687	—	—	—	17·45	—	
L	—	1·5	—	—	—	38·1	—	
M	—	0 312	—	—	—	7·92	—	
N	—	0·5	—	—	—	12·7	—	

NOTES

1. HOLES B AND SLOT J HAVE POSITIONAL TOLERANCE ZONES 0·001 IN. (0·025 m m) DIAMETER AND 0·001 IN. (0·025 m.m) WIDE RESPECTIVELY. DATUM-FACE P.

2. THE VALVE SHALL SEAT INTO THE GAUGE UNDER ITS OWN WEIGHT

DRAWING NO. 23

B4F BASE

ILLUSTRATIVE

THIRD ANGLE PROJECTION.

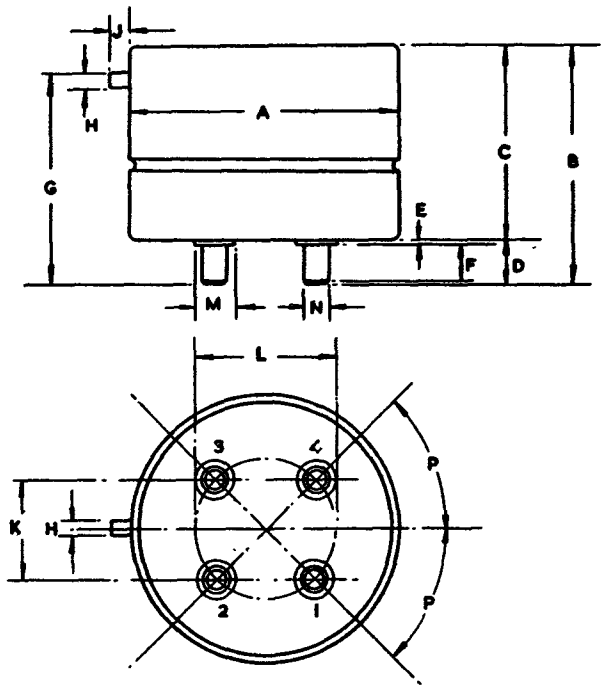

NOMINAL DIMENSIONS IN INCHES EXCEPT WHERE OTHERWISE STATED			
A	1·854	H	0·082 MAX.
B	1·670	J	0·094
C	1·395	K	0·688
D	0·320 MAX.	L	0·971
E	0·030 MAX.	M	0·260 MAX.
F	0·250 MIN.	N	0·187
G	1·165	P	45°

NOTES.

1. DIMENSIONS B,D AND G MAY BE INCREASED 0·060 IN. MAX. FOR SOLDER ON THE ENDS OF THE PINS
2. THE DRAWING SHOWS THE NUMBERING OF THE PINS AS VIEWED FROM THEIR FREE ENDS.
3. REFERENCE SHOULD BE MADE TO BS 448 FOR FULL INFORMATION.

DRAWING NO. 24

B7A BASE
ILLUSTRATIVE

THIRD ANGLE PROJECTION.

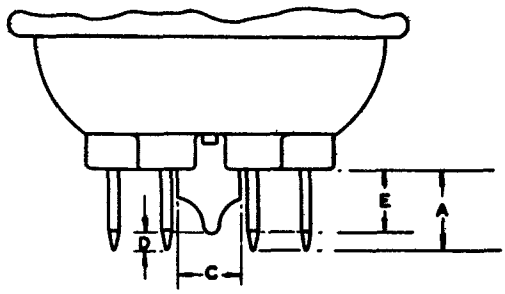

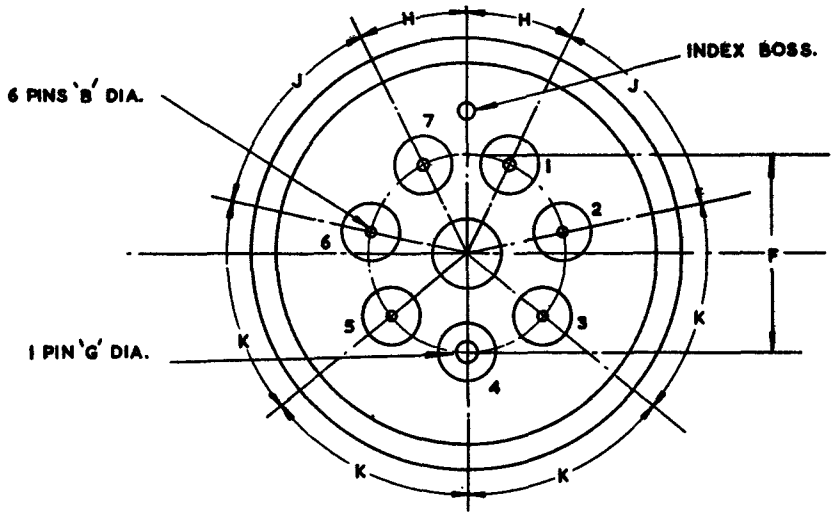

DIMENSIONS	
A	0·438 IN. NOM.
B	0·058 IN. NOM.
C	0·375 IN. MAX.
D	ZERO MIN.
E	0·312 IN. MIN.
F	1·000 IN. NOM.
G	0·125 IN. NOM.
H	26° NOM.
J	52° NOM.
K	51° NOM.

NOTES.

1. THE DIMENSIONS FIXING THE POSITION OF THE PINS REFER TO THE FIXED END OF THE PIN.
2. THE TIPS OF THE PINS SHALL BE TAPERED OR ROUNDED.
3. THE DRAWING SHOWS THE NUMBERING OF THE PINS AS SEEN FROM THEIR FREE ENDS.
4. REFERENCE SHOULD BE MADE TO BS448 FOR FULL INFORMATION.

DRAWING No. 25

B7D VALVE BASE

ILLUSTRATIVE.

THIRD ANGLE PROJECTION

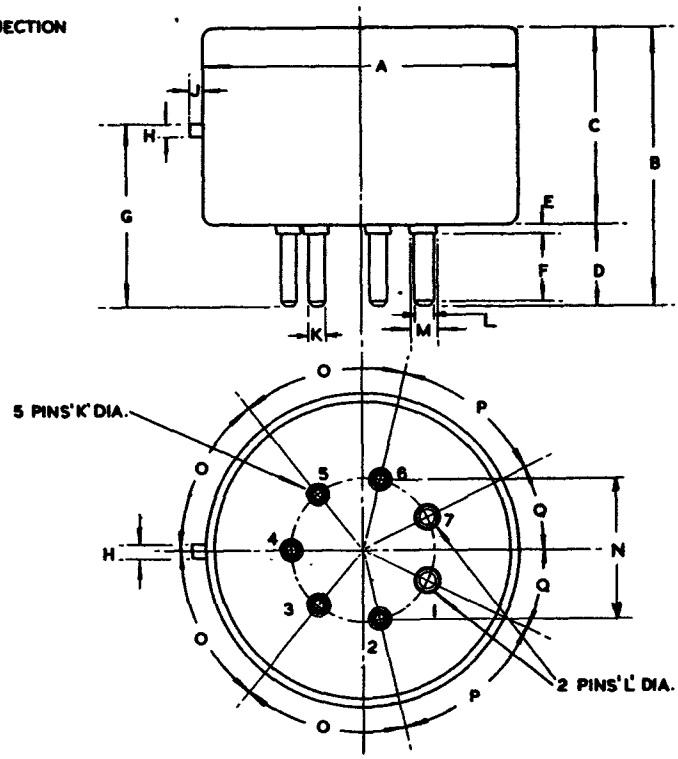

NOMINAL DIMENSIONS IN INCHES EXCEPT WHERE OTHERWISE STATED			
A	2·167	J	0·094
B	1·875	K	0·125
C	1·338	L	0·156
D	0·562 MAX.	M	0·195 MAX.
E	0·065 MAX.	N	1·000
F	0·450 MIN.	O	51° NOM.
G	1·230	P	52° NOM.
H	0·082 MAX.	Q	26° NOM.

NOTES

1. DIMENSIONS B,D AND G MAY BE INCREASED BY 0·030 IN. MAX. FOR SOLDER ON THE ENDS OF THE PINS
2. THE DIMENSIONS FOR THE POSITION OF PINS REFER TO THEIR FIXED ENDS.
3. THE ENDS OF PINS MAY BE ROUNDED OR TAPERED.
4. THE DRAWING SHOWS THE NUMBERING OF THE PINS VIEWED FROM THEIR FREE ENDS.
5. REFERENCE SHOULD BE MADE TO BS448 FOR FULL INFORMATION.

DRAWING No. 26

B9A BASE

ILLUSTRATIVE.

THIRD ANGLE PROJECTION

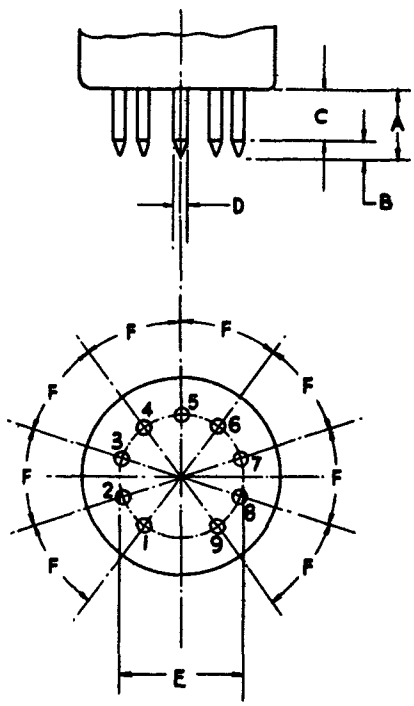

DIMENSIONS	
A	0·28 IN. MAX.
B	0·015 IN. MIN.
C	0·187 IN. MIN.
D	0·040 IN. NOM.
E	0·468 IN. NOM.
F	36° NOM.

NOTES

1. THE DIMENSIONS FIXING THE POSITIONS OF THE PINS REFER TO THE FIXED ENDS.
2. THE TIPS OF THE PINS SHALL BE TAPERED OR ROUNDED
3. THE DRAWING SHOWS THE NUMBERING OF THE PINS AS VIEWED FROM THEIR FREE ENDS.
4. REFERENCE SHOULD BE MADE TO BS448 FOR FULL INFORMATION.

DRAWING NO. 26B

B9A PIN POSITION GAUGE
MANDATORY.

THIRD ANGLE PROJECTION.

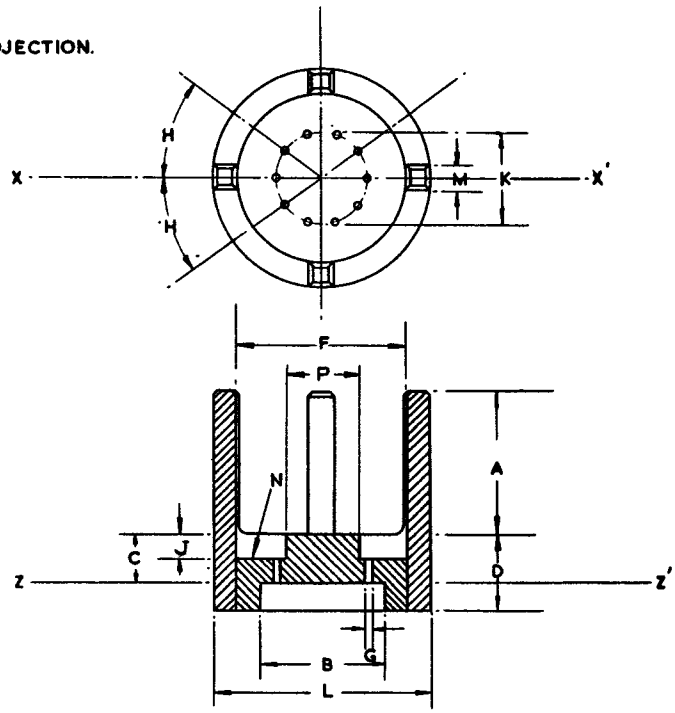

SECTION ON XX'

THE MILLIMETRE DIMENSIONS ARE DERIVED FROM THE ORIGINAL INCH DIMENSIONS.

REF.	DIMENSIONS							NOTES
	INCHES			DEGREES	MILLIMETRES			
	MIN.	NOM.	MAX.	NOM.	MIN.	NOM.	MAX.	
A	0·750	—	—	—	19·05	—	—	
B	0·65	—	—	—	16·51	—	—	
C	—	0·25	—	—	—	6·35	—	
D	—	0·4	—	—	—	10·2	—	
F	0·875	0·875	0·880	—	22·225	22·225	22·350	2&3
G	0·048	0·048	0·0485	—	1·219	1·219	1·232	2
H	—	—	—	36	—	—	—	
J	0·124	0·124	0·125	—	3·15	3·15	3·17	
K	—	0·468	—	—	—	11·887	—	
L	—	1·125	—	—	—	2558	—	
M	—	0·125	—	—	—	3·18	—	3
P	0·373	0·375	0·375	—	9·474	9·525	9·525	

NOTES.

1. BEFORE GAUGING, THE PINS ON THE B9A BASE MAY REQUIRE STRAIGHTENING IN THE TOOL SHOWN ON DRAWING NO. 26A.
2. THE HOLES G HAVE POSITIONAL TOLERANCE ZONES 0·0008 IN. (0·02 mm.) DIAMETER. DATUM–FACE N. CYLINDER F SHOULD HAVE A CONCENTRICITY TOLERANCE OF 0·005 IN (0·125 m m). DIAMETER. DATUM–GROUP OF HOLES G.
3. THE PILLARS SHOWN ON THE GAUGE ARE PROVIDED TO CHECK THAT THE VERTICAL SIDES OF THE BULBS ARE SENSIBLY AT RIGHT ANGLES TO THE SOLE OF BASE.
4. THE VALVE SHALL SEAT INTO THE GAUGE UNDER ITS OWN WEIGHT.
5. DIMENSIONS, MOUNTING METHOD, MOUNTING FLANGE, ETC., BELOW PLANE Z–Z' ARE OPTIONAL, PROVIDED ADEQUATE SPACE IS LEFT FOR THE PROTRUSION OF THE PINS.

DRAWING No27
B11A BASE
ILLUSTRATIVE.

THIRD ANGLE PROJECTION

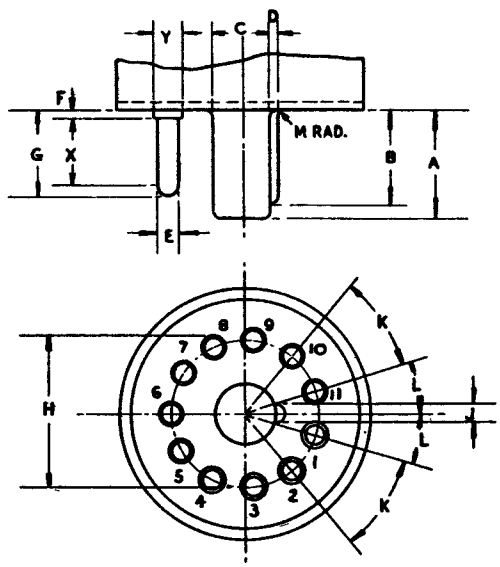

NOMINAL DIMENSIONS IN INCHES EXCEPT WHERE OTHERWISE STATED			
A	0·560 MAX.	H	0·750
B	0·480 MIN.	J	0·085
C	0·308	K	$32\frac{8}{11}°$
D	0·048	L	$16\frac{4}{11}°$
E	0·093	M	0·050 MAX.
F	0·035 MAX.	X	0·340 MIN.
G	0·437 MAX.	Y	0·135 MAX.

NOTES.

1. DIMENSION 'G' MAY BE INCREASED BY 0·03IN. MAXIMUM FOR SOLDER.
2. THE DIMENSIONS FIXING THE POSITIONS OF PINS REFER TO THE FIXED END OF THE PIN.
3. ANY PROJECTIONS ON THE UNDER SURFACE OF THE BASE OTHER THAN THOSE SHOWN, SUCH AS A RIM, SHALL HAVE A HEIGHT NOT EXCEEDING 0·020IN.
4. THE DRAWING SHOWS THE NUMBERING OF THE PINS AS SEEN FROM THEIR FREE ENDS.
5. REFERENCE SHOULD BE MADE TO BS448 FOR FULL INFORMATION.

DRAWING Nº 28

B3A BASE.

ILLUSTRATIVE.

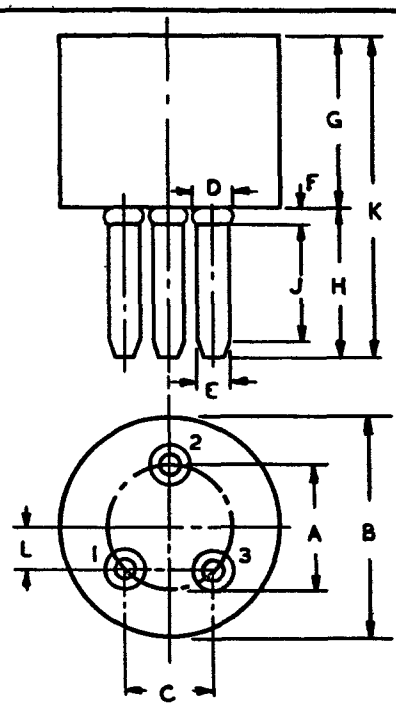

THE MILLIMETRE DIMENSIONS ARE DERIVED FROM THE ORIGINAL INCH DIMENSIONS.

REF.	INCHES			MILLIMETRES			NOTES
	MIN.	NOM.	MAX.	MIN.	NOM.	MAX.	
A	—	0·344	—	—	8·74	—	—
B	0·610	—	0·656	15·50	—	16·65	—
C	—	0·243	—	—	6·17	—	—
D	—	—	0·135	—	—	3·42	—
E	0·090	0·093	0·096	2·286	2·362	2·438	—
F	—	—	0·045	—	—	1·14	—
G	—	0·500	—	—	12·7	—	—
H	—	—	0·447	—	—	11·35	1
J	0·340	—	—	8·64	—	—	—
K	—	0·937	—	—	23·8	—	—
L	—	0·122	—	—	3·1	—	—

NOTES.

1. ON THE FINISHED TUBE ADD 0·030 IN. (0·76 mm.) FOR SOLDER.
2. THE DISPOSITION OF THE PINS SHALL BE CHECKED BY MEANS OF THE GAUGE SHOWN IN Fig. B3A/1.2, B.S. 448.
3. THE DIMENSIONS ON THE DRAWING FIXING THE POSITIONS OF THE PINS REFER TO THE FIXED ENDS OF THE PINS.
4. REFERENCE SHOULD BE MADE TO BS448 FOR FULL INFORMATION.

DRAWING No 29
B4A BASE
MANDATORY

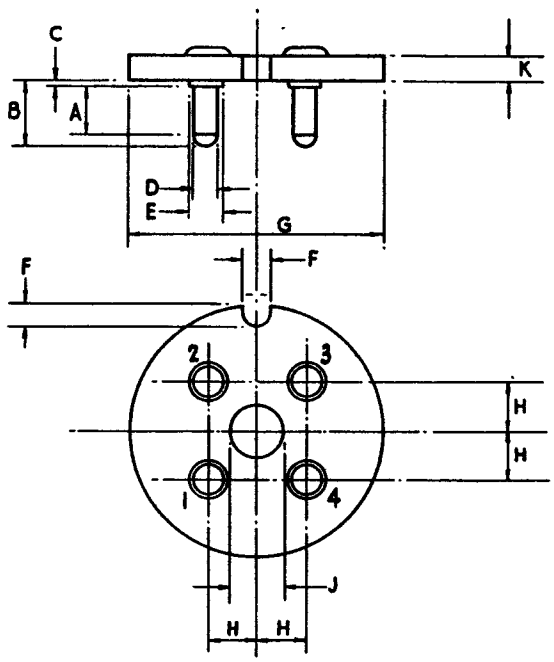

THE MILLIMETRE DIMENSIONS ARE DERIVED FROM THE ORIGINAL INCH DIMENSIONS

REF	DIMENSIONS.							NOTES
	INCHES			DEGREES	MILLIMETRES			
	MIN.	NOM.	MAX	NOM	MIN	NOM	MAX	
A	0·328				8·33			
B	0·413	0·423	0·433		10·50	10·74	10·98	
C			0·040				1·01	
D	0·183	0·187	0·191		4·65	4·75	4·85	
E	0·240	0·250	0·260		6·10	6·35	6·60	
F	0·171	0·187	0·203		4·36	4·75	5·14	
G	1·788	1·813	1·813		45·42	46·04	46·04	
H	0·324	0·344	0·364		8·25	8·74	9·20	
J			0·383				9·75	
K		0·187				4·75		

DRAWING NO. 30

B4B BASE.

ILLUSTRATIVE.

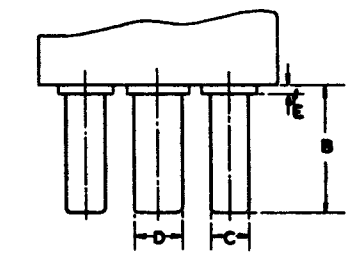

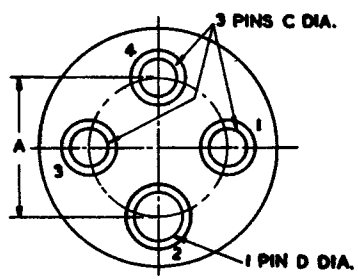

DIMENSIONS IN INCHES	
A	0·362 NOM
B	0·333 NOM
C	0·090 NOM
D	0·122 NOM
E	0·040 MAX.

NOTES

1. DIMENSION B MAY BE INCREASED BY 0·03 IN MAX. FOR SOLDER

2. REFERENCE SHOULD BE MADE TO BS448 FOR FULL INFORMATION.

DRAWING No. 31

B5A and B5A/F BASES

ILLUSTRATIVE.

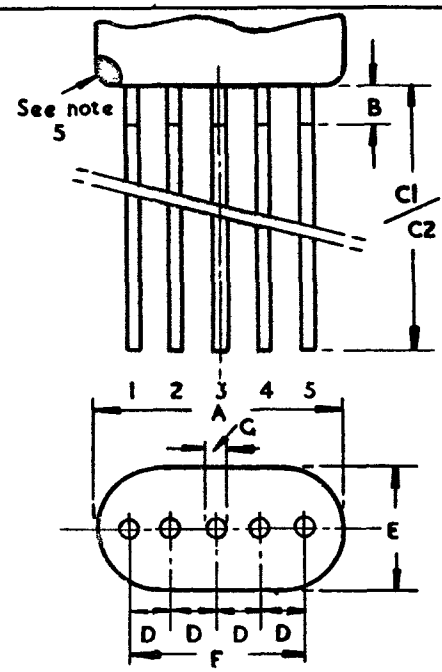

THE INCH DIMENSIONS ARE DERIVED FROM THE ORIGINAL MILLIMETRE DIMENSIONS EXCEPT WHERE STATED.

REF.	DIMENSIONS							NOTES
	INCHES			DEG[5]	MILLIMETRES.			
	MIN	NOM	MAX	NOM	MIN	NOM	MAX	
A	—	—	0·400	—	—	—	10·16	3
B	—	—	0·078	—	—	—	2·0	1
C1	1·5	—	—	—	31·75	—	—	2, 3
C2	0·169	0·200	0·231	—	4·30	5·08	5·85	2, 3
D	0·032	—	0·061	—	0·80	—	1·55	—
E	—	—	0·291	—	—	—	7·4	—
F	0·126	0·2	0·216	—	3·2	5·08	5·5	4
G	0·0134	—	0·019	—	0·34	—	0·48	—

NOTES.

1. WIRES SHALL BE TINNED EXCEPT FOR DIMENSION B.
2. THERE ARE TWO VERSIONS OF THIS BASE B5A/F HAS LONG WIRES, B5A HAS SHORT WIRES.
3. THESE MILLIMETRE DIMENSIONS ARE DERIVED FROM THE INCH ORIGINALS.
4. THE MILLIMETRE NOMINAL OF THIS DIMENSION IS DERIVED FROM THE ORIGINAL INCH NOMINAL DIMENSION.
5. THERE IS A RED SPOT ADJACENT TO PIN 1.
6. REFERENCE SHOULD BE MADE TO BS 448 FOR FULL INFORMATION.

DRAWING No. 32

B5B and B5B/F BASES

ILLUSTRATIVE.

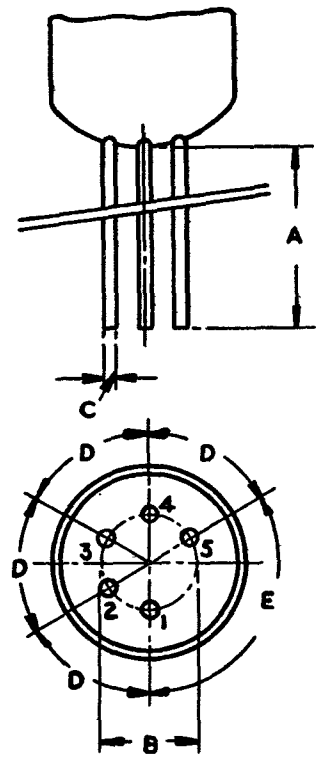

THE INCH DIMENSIONS ARE DERIVED FROM THE ORIGINAL MILLIMETRE DIMENSIONS.

REF.	DIMENSIONS							NOTES
	INCHES			DEG^S	MILLIMETRES			
	MIN	NOM	MAX	NOM	MIN	NOM	MAX	
A	1·5	—	—	—	32	—	—	—
B	—	0·091	—	—	—	2·3	—	—
C	—	0·0158	—	—	—	0·4	—	—
D	—	—	—	60	—	—	—	—
E	—	—	—	120	—	—	—	—

NOTE

1. REFERENCE SHOULD BE MADE TO BS448 FOR FULL INFORMATION.

DRAWING No. 33
B5D BASE.
ILLUSTRATIVE.

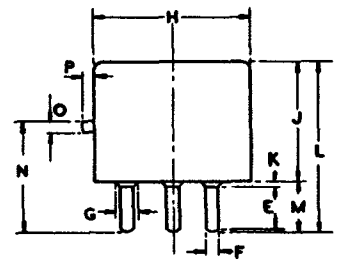

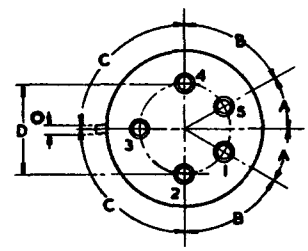

NOMINAL DIMENSIONS IN INCHES EXCEPT WHERE OTHERWISE STATED			
A	30°	J	1·750
B	60°	K	0·073 MAX.
C	90°	L	2·487
D	1·250	M	0·740 MAX.
E	0·575 MIN.	N	1·576
F	0·187	O	0·082 MAX.
G	0·260 MAX.	P	0·120
H	2·165		

NOTES

1. DIMENSIONS L, M AND N MAY BE INCREASED BY 0·03 INCH MAX. FOR SOLDER.
2. THE DIMENSIONS FIXING THE POSITIONS OF THE PINS REFER TO THE FIXED END OF THE PINS.
3. REFERENCE SHOULD BE MADE TO BS448 FOR FULL INFORMATION.

DRAWING No 34
B5E BASE.
ILLUSTRATIVE

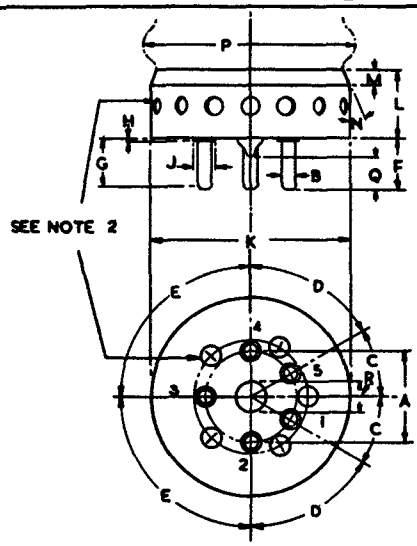

NOMINAL DIMENSIONS IN INCHES EXCEPT WHERE OTHERWISE STATED			
A	1·250	J	0·260 MAX.
B	0·187	K	2·711
C	30°	L	0·945
D	60°	M	0·197
E	90°	N	13°
F	0·740 MAX.	P	2·875 MAX.
G	0·575 MIN.	Q	0·500 MIN.
H	0·073 MAX.	R	0·500

NOTES

1. DIMENSION F MAY BE INCREASED BY 0·03 IN. MAX. FOR SOLDER
2. FIVE HOLES 0·315 IN. DIA. PLACED AS SHOWN ON THE BASE AND FIFTEEN HOLES 0·236 IN. DIA. EQUALLY SPACED ROUND THE SHELL TO ALLOW FORCED AIR COOLING.
3. P IS THE MAXIMUM PERMISSIBLE DIAMETER OF THE VALVE.
4. THE ENDS OF THE PINS MAY BE TAPERED OR ROUNDED.
5. FOR FURTHER INFORMATION SEE BS:448.

DRAWING Nº 35
B5F BASE.
ILLUSTRATIVE.

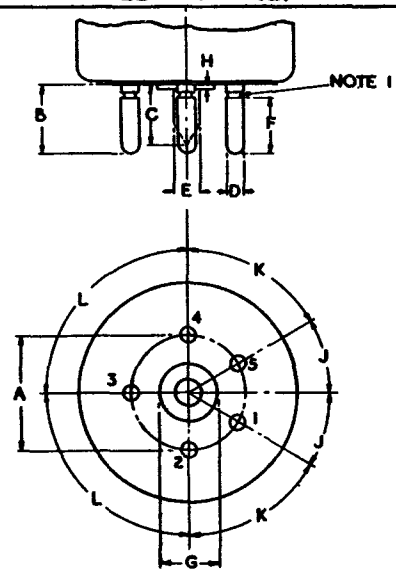

NOMINAL DIMENSIONS IN MILLIMETRES EXCEPT WHERE OTHERWISE STATED			
A	31·75	G	16·0
B	17·0	H	0·2 MAX.
C	15·0 MAX.	J	30°
D	4·75	K	60°
E	7·375	L	90°
F	15·0		

NOTES

1. THE WAIST SHOWN ON THE PINS IS OPTIONAL AND SHOULD NOT BE USED FOR ANY LOCKING DEVICE.
2. THE DIMENSIONS FIXING THE POSITION OF THE PINS REFER TO THEIR FIXED ENDS.
3. THE ENDS OF THE PINS MAY BE ROUNDED OR TAPERED.
4. C IS THE OVERALL LENGTH OF THE EXHAUST TUBULATION
5. FOR FULL INFORMATION SEE BS: 448.

DRAWING No. 36.

B8A BASE
ILLUSTRATIVE

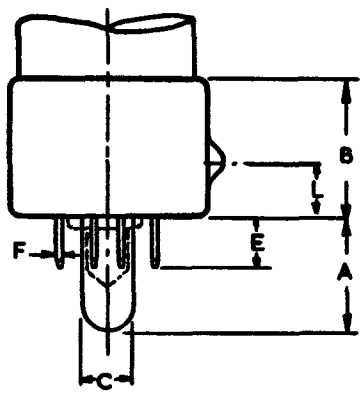

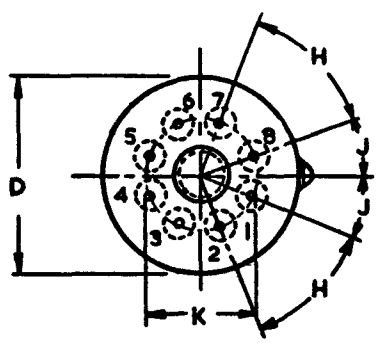

NOMINAL DIMENSIONS IN MM EXCEPT WHERE OTHERWISE STATED			
A	13·4	F	0·040 INCH
B	15·0	H	45°
C	5·25	J	22½°
D	22·0	K	11·5
E	6·0	L	5·75

NOTES

1. THE SPIGOT IS OPTIONAL, BUT WHEN ONE IS NOT FITTED THERE MAY BE A GLASS BOSS AND EXHAUST PIPE AS SHOWN BY BROKEN LINES IN THE DRAWING.
2. THE ENDS OF THE PINS SHALL BE TAPERED OR ROUNDED.
3. REFERENCE SHOULD BE MADE TO B.S.448 FOR FULL INFORMATION.

DRAWING NO. 39
B12A BASE.
ILLUSTRATIVE.

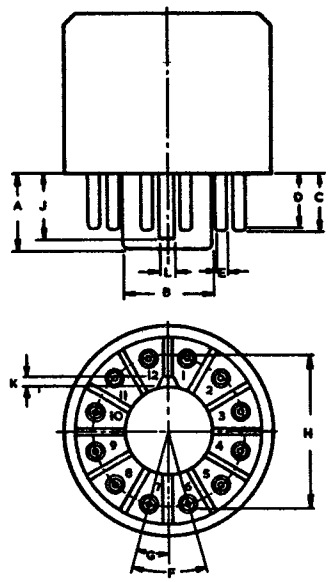

NOMINAL DIMENSIONS IN INCHES EXCEPT WHERE OTHERWISE STATED.			
A	0·530 MAX.	G	15°
B	0·616	H	1·063
C	0·410 MAX.	J	0·430 MIN
D	0·320 MIN.	K	0·070
E	0·093	L	0·155
F	30°		

NOTES

NOTE 1. DIMENSION C MAY BE INCREASED BY 0·03 IN. MAXIMUM FOR SOLDER.

NOTE 2. THE DIMENSIONS FIXING THE POSITION OF THE PINS REFER TO THE FIXED END OF THE PIN. THE PIN DISPOSITION SHALL BE CHECKED BY MEANS OF THE GAUGE SHOWN IN FIG. B12A/1.2. (BS448)

NOTE 3. REFERENCE SHOULD BE MADE TO BS 448 FOR FULL INFORMATION.

DRAWING No 40

B14A BASE.
ILLUSTRATIVE.

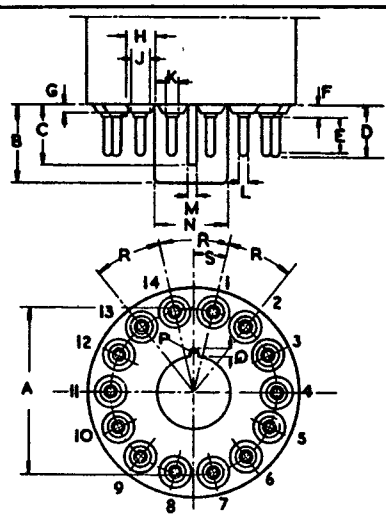

NOMINAL DIMENSIONS IN INCHES EXCEPT WHERE OTHERWISE STATED.			
A	1·750	K	0·135 MAX.
B	0·775 MAX.	L	0·093
C	0·610 MIN.	M	0·085
D	0·515 MAX.	N	0·752
E	0·340 MIN.	P	0·046 RAD.
F	0·120 MAX.	Q	0·078
G	0·110 MAX.	R	25 5/7°
H	0·320	S	12 6/7°
J	0·253 MAX.		

NOTES

1. DIMENSION D MAY BE INCREASED BY 0·031N. MAXIMUM FOR SOLDER.
2. THE DIMENSIONS FIXING THE POSITION OF THE PINS REFER TO THE FIXED END OF THE PIN AND ARE GIVEN FOR INFORMATION ONLY. THE PIN POSITION MAY BE CHECKED ONLY BY MEANS OF THE GAUGE SHOWN IN FIG B14A/1.2., B.S. 448.
3. THE DRAWING SHOWS THE NUMBERING OF THE PINS AS SEEN FROM THE FREE ENDS.
4. REFERENCE SHOULD BE MADE TO BS 448 FOR FULL INFORMATION.

DRAWING No.41.

BC4 BASE

MANDATORY

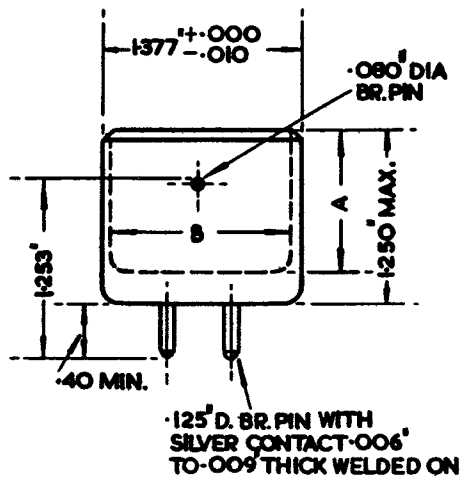

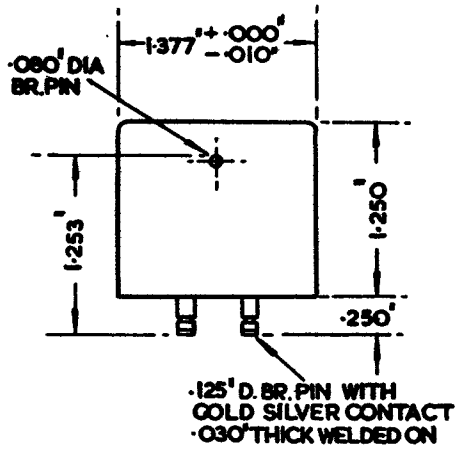

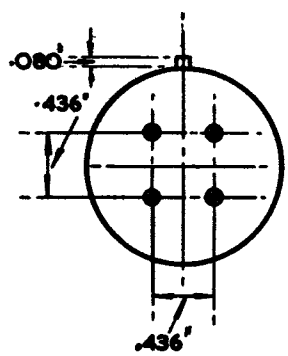

INTERNAL DIMENSIONS A & B TO SUIT MANUFACTURERS REQUIREMENTS.

FIG. I. MOULDED TYPE

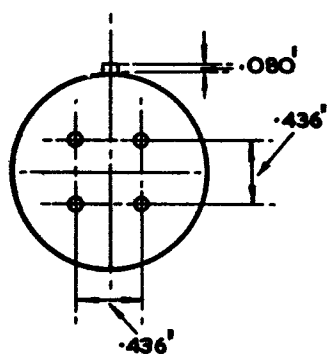

MATERIAL:-NI.P. BRASS CYLINDER WITH MOULDED INTERIOR.

FIG. 2. METAL SHELL TYPE

DRAWING No. 42.

C11 BASE

MANDATORY

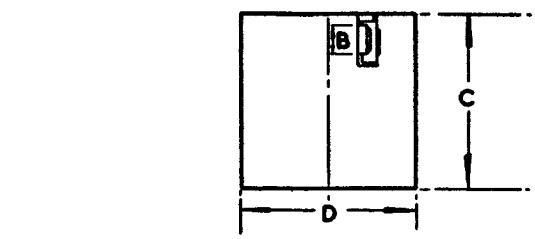

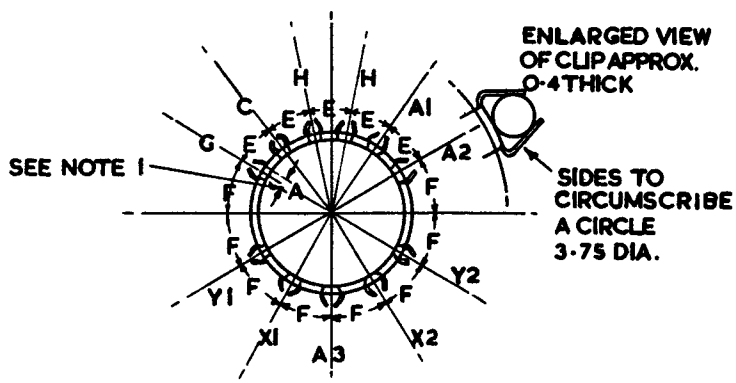

SLEEVE & END PLATE PAXOLIN "O" QUALITY 1·6 THICK

DIMENSIONS IN MMS. EXCEPT WHERE OTHERWISE STATED	A	B	C	D	E	F
	5·5 ±0·13	11·0 ±0·2	70·0 ±0·5	72·6 ±0·3	24° ±0·75	30° ±0·75

NOTE

1. DIMENSION "A" REFERS TO THE SLOT IN THE PAXOLIN INTO WHICH THE CLIP IS FITTED.

DRAWING No. 43
SC8 BASE
MANDATORY

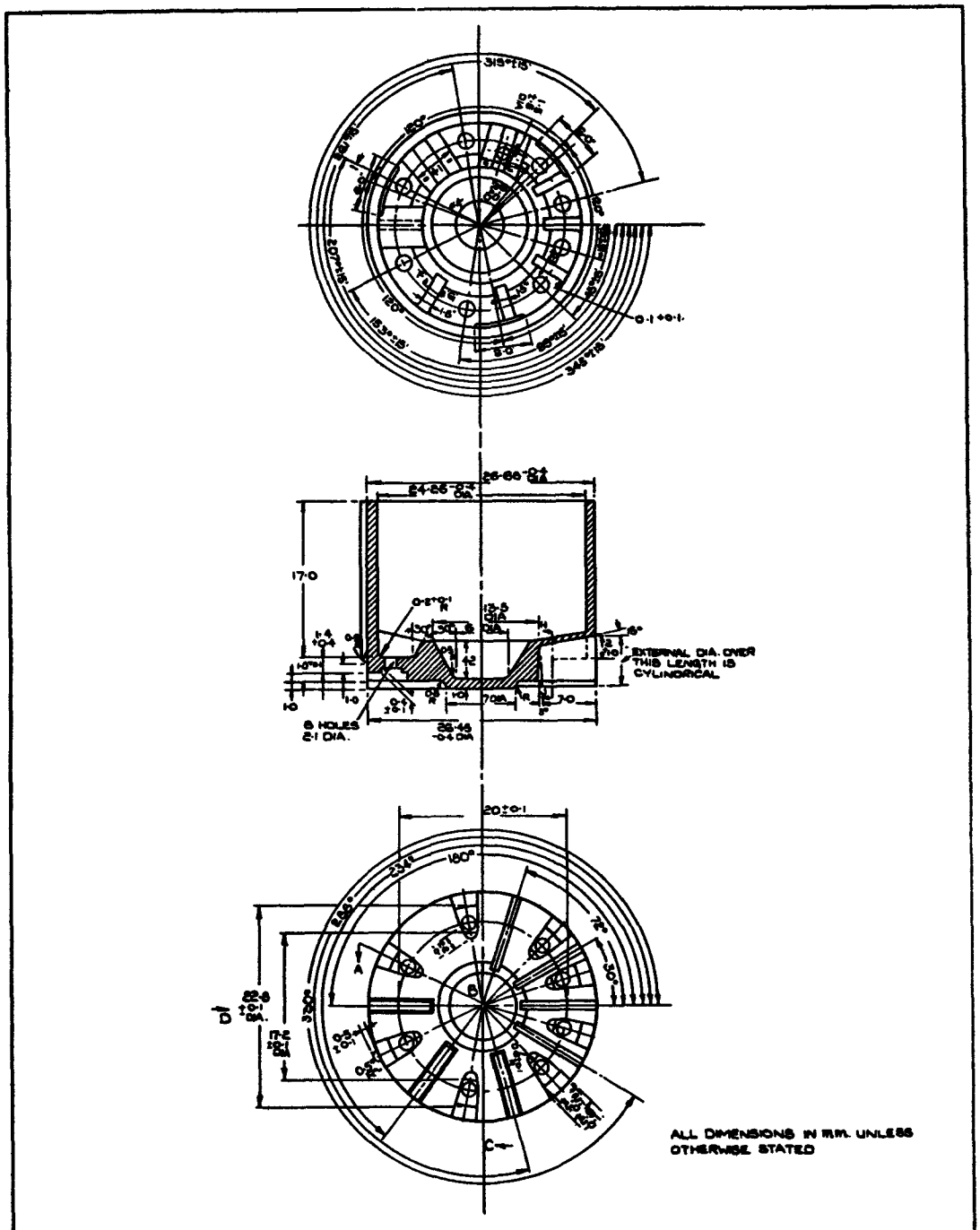

DEC. 1955

K1001/AIV/D.43

DRAWING NO. 45
MAGNAL BASE
MANDATORY

REF.	REFERENCE MIN.	CENTER	MAX.
	IN.	IN.	IN.
A	·550	·560	·570
B	·490	·500	·510
C	·300	·308	·315
D	·427	·437	·447
E	—	—	·050
F	·085	·090	·095
G	·352	·362	·372
H	—	1·063	—
J	·090	·093	·096
K	—	16-4/11°	—
L	—	32-8/11°	—
M	·305	·312	·317
N	·075	·080	·085
P	·343	·353	·363
Q	·040	·047	·055
R_1	—	·031	—
R_2	—	—	·050
R_3	—	·040	—
T	·340	—	—
U	—	—	·135

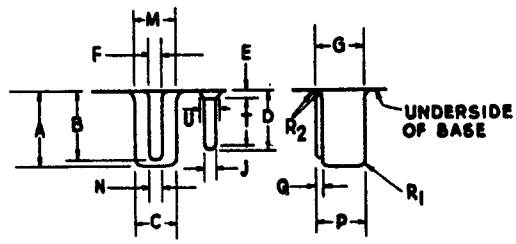

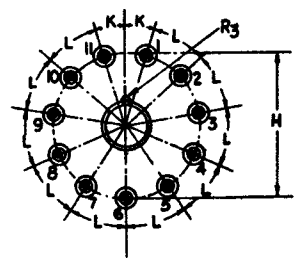

NOTES 1. DIMENSIONS FIXING THE CONTACT PIN POSITIONS REFER TO THEIR FIXED ENDS AND ARE GIVEN FOR INFORMATION ONLY. PIN POSITIONS MAY BE CHECKED ONLY BY MEANS OF ALIGNMENT GAUGE No. GB11-1 AS SPECIFIED IN RETMA STANDARD ET-106-C OF JUNE 1955.

2. THE DRAWING SHOWS THE NUMBERING OF THE PINS AS SEEN FROM THEIR FREE ENDS.
3. DIMENSION 'J' DOES NOT INCLUDE INCREASE IN PIN DIAMETER DUE TO SOLDER.
4. DIMENSION 'D' MAY BE INCREASED BY ·030" MAX. FOR SOLDER.
5. ANY PROJECTION ON THE UNDER-SURFACE OF THE BASE OTHER THAN THESE SHOWN SUCH AS A RIM OR EXTERNAL BARRIERS, SHALL HAVE A HEIGHT NOT EXCEEDING ·040".
6. EXTRACTED FROM RETMA PUBLICATION ET-103-D OF MARCH 1955

DRAWING No. 46
B8F BASE
MANDATORY

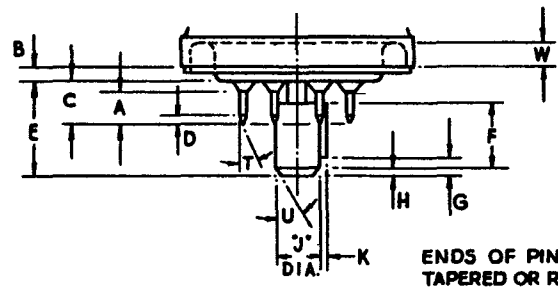

ENDS OF PINS TO BE TAPERED OR ROUNDED.

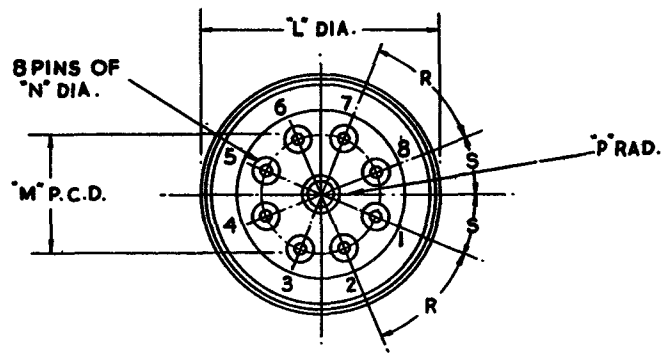

THE MILLIMETRE DIMENSIONS ARE DERIVED FROM THE ORIGINAL INCH DIMENSIONS

REF.	DIMENSIONS.							NOTES
	INCHES			DEGREES	MILLIMETRES.			
	MIN	NOM	MAX	NOM	MIN	NOM	MAX	
A	0·187				4·75			
B		0·080				2·03		
C			0·250				6·35	
D		0·035				0·89		
E	0·514	0·534	0·554		13·10	13·55	14·05	
F	0·381	0·401	0·456		9·7	10·2	11·5	
G	0·068	0·088	0·108		1·75	2·25	2·70	
H		0·035				0·89		
J	0·255	0·260	0·265		6·48	6·60	6·73	
K			0·049				1·24	
L	1·417	1·425	1·433		36·00	36·20	36·38	
M	0·680	0·687	0·694		17·28	17·45	17·62	
N	0·045	0·050	0·053		1·15	1·27	1·34	
P			0·043				1·09	
R				45				
S				22·5				
T				22·5				
U				30				
W	0·187				4·75			

DRAWING No. 47
B12E BASE
MANDATORY

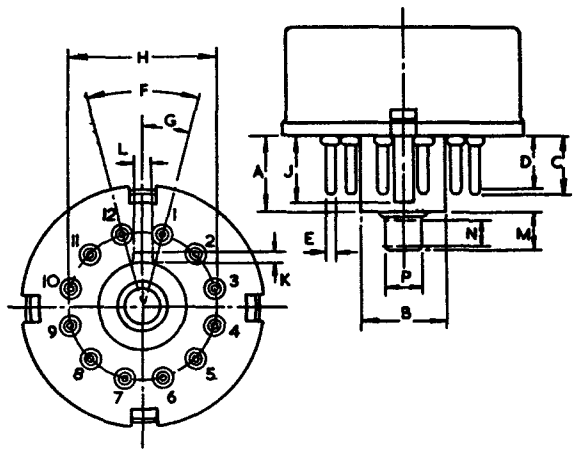

THE MILLIMETRE DIMENSIONS ARE DERIVED FROM THE ORIGINAL INCH DIMENSIONS.

REF.	DIMENSIONS							NOTES
	INCHES			DEGREES	MILLIMETRES			
	MIN	NOM	MAX	NOM	MIN	NOM	MAX	
A			0·530				13·46	
B	0·598	0·616	0·635		15·19	15·65	16·1	4
C			0·410				10·4	1
D	0·320				8·13			
E	0·090	0·093	0·096		2·29	2·36	2·43	
F				30				2
G				15				2
H		1·063				2·70		
J	0·430				10·95			
K	0·065	0·070	0·075		1·66	1·78	1·90	
L	0·145	0·155	0·165		3·70	3·94	4·18	4
M	0·240	0·256	0·270		6·10	6·50	6·85	
N	0·200				5·10			6
P	0·245	0·250	0·255		6·23	6·35	6·47	

NOTES

1. DIMENSION C MAY BE INCREASED BY 0·03 IN. (0·076MM.) MAXIMUM FOR SOLDER.
2. THE DIMENSIONS FIXING THE POSITION OF THE PINS REFER TO THE FIXED END OF THE PIN AND ARE GIVEN FOR INFORMATION ONLY. THE PIN POSITION MAY BE CHECKED ONLY BY MEANS OF THE GAUGE IN B.S. 448, FIG. B12A/1.2
3. DRAWING SHOWS THE NUMBERING OF THE PINS AS SEEN FROM THE FREE ENDS.
4. THE SPIGOT & KEY MAY BE TAPERED WITHIN THE LIMITS QUOTED.
5. THE RADII OF CORNERS, IF ROUNDED SHALL NOT EXCEED 0·020 IN. (0·5 MM.)
6. CONTACT LENGTH.

DRAWING No. 48

DRAWINGS OF AMERICAN A4-5 & A4-9

MANDATORY

A4-5

SMALL 4 PIN

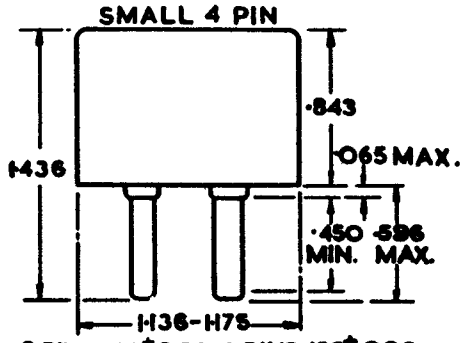

FOR PIN ALIGNMENT USE GAUGE No. GA4-1

A4-9

MEDIUM 4 PIN

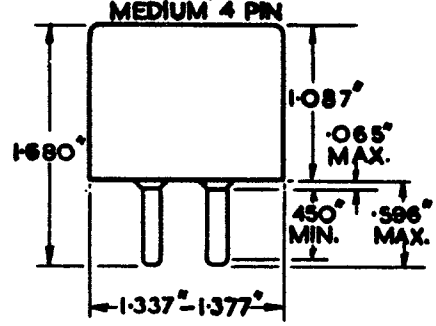

FOR DETAILS OF GAUGES SEE RETMA STANDARD ET-106-C OF JUNE 1955.

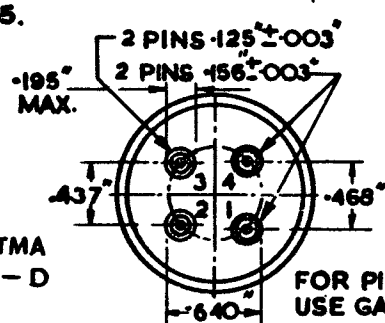

EXTRACTED FROM RETMA STANDARD ET — 103 — D OF MARCH 1955.

FOR PIN ALIGNMENT USE GAUGE No. GA4-1

DRAWING No. 49

DRAWING FOR AMERICAN A 4 – 10
MANDATORY

A4-10

MEDIUM 4-PIN
BAYONET

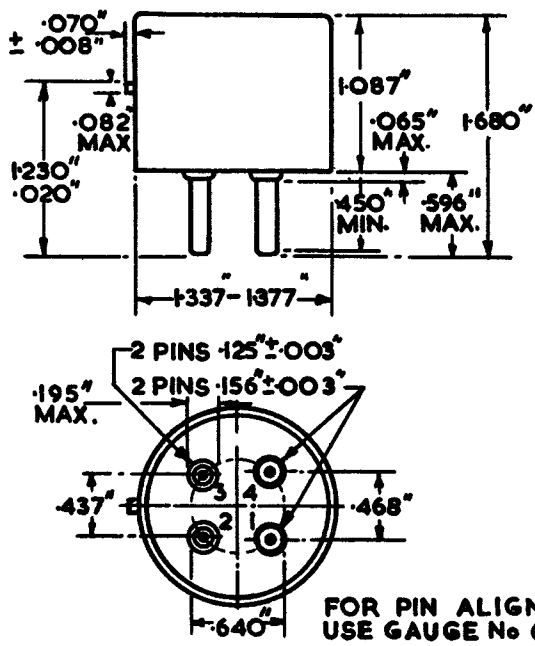

FOR PIN ALIGNMENT
USE GAUGE No GA4-1.

EXTRACTED FROM RETMA
STANDARD ET – 103 – D
OF MARCH 1955.

FOR DETAILS OF GAUGES
SEE RETMA STANDARD
ET-106-C OF JUNE 1955.

DRAWING No. 50

DRAWINGS FOR AMERICAN A5-6 & A5-11

MANDATORY

A5-6

SMALL 5-PIN

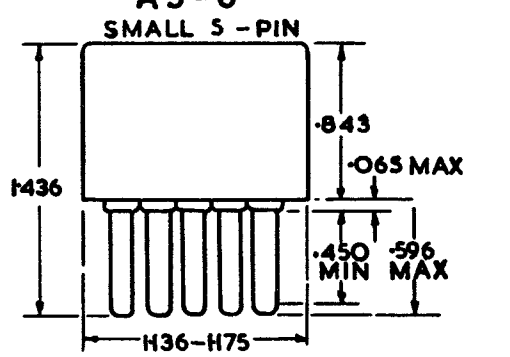

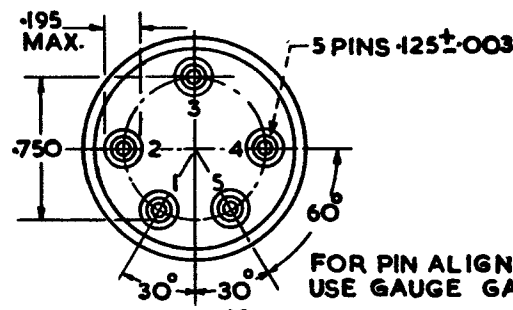

FOR PIN ALIGNMENT USE GAUGE GA5-1

A5-11

MEDIUM 5 PIN

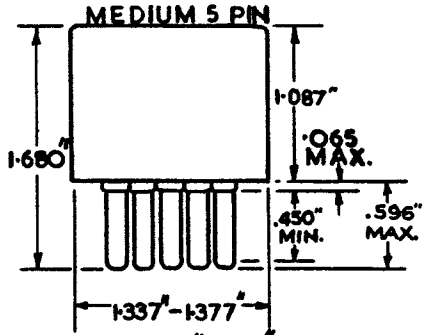

FOR DETAILS OF GAUGES SEE RETMA STANDARD ET-106-C OF JUNE 1955.

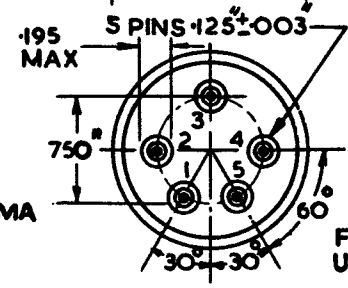

FOR PIN ALIGNMENT USE GAUGE No. GA5-1

EXTRACTED FROM RETMA STANDARD ET-103-D OF MARCH 1955.

DRAWING No. 51

DRAWINGS FOR AMERICAN A6-7 & A6-12

MANDATORY

A6-7

SMALL 6-PIN

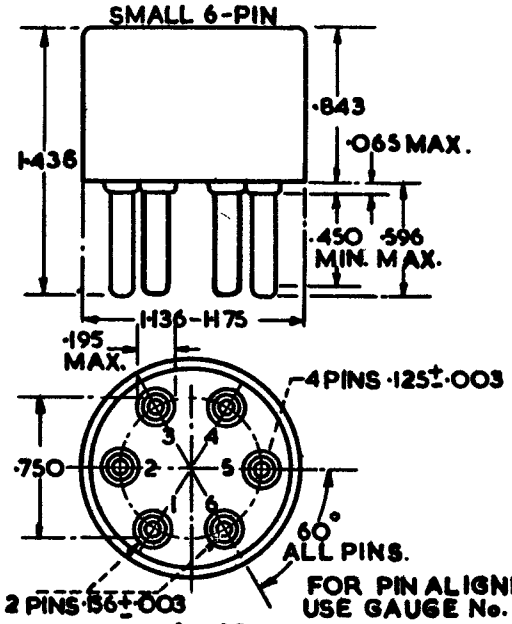

A6-12

MEDIUM 6-PIN

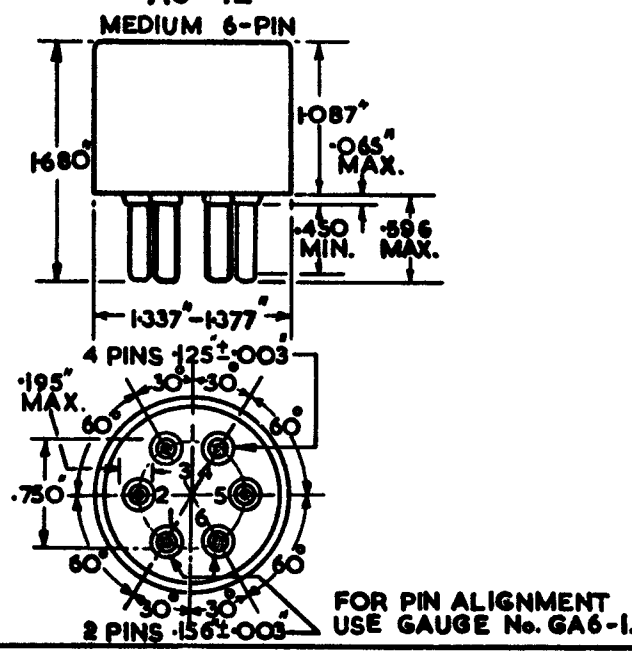

FOR DETAILS OF GAUGES SEE RETMA STANDARD ET-103-C OF JUNE 1958

EXTRACTED FROM RETMA STANDARD ET-103-D OF MARCH 1955.

DRAWING No. 52

DRAWINGS FOR AMERICAN A7-8 & A7-13

MANDATORY

A7-8

SMALL 7-PIN

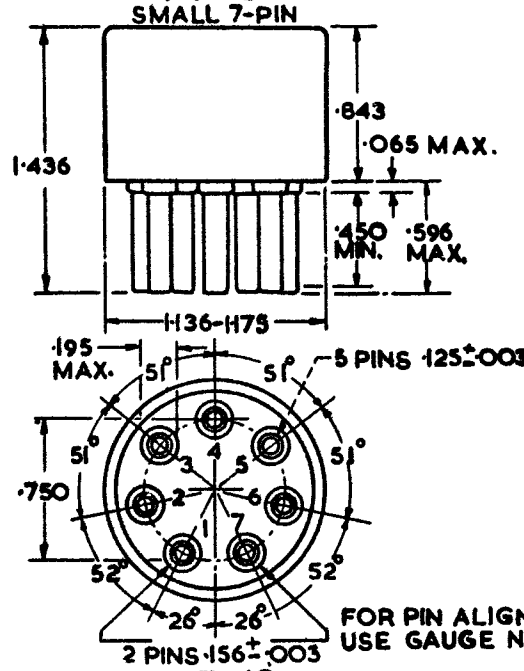

A7-13

MEDIUM 7-PIN

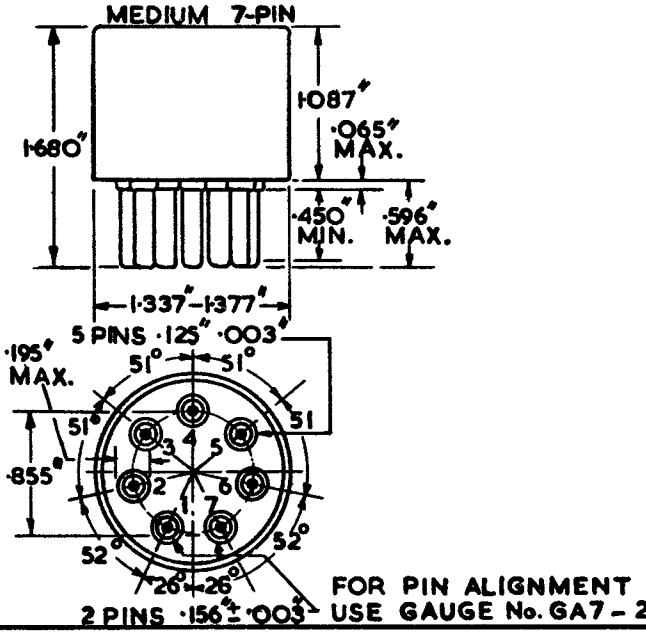

FOR DETAILS OF GAUGES SEE RETMA STANDARD ET-106-C OF JUNE 1955.

EXTRACTED FROM RETMA STANDARD ET-103-D OF MARCH 1955

DRAWING No. 53

DRAWING FOR AMERICAN A7 – 14

MANDATORY

A7–14

MEDIUM 7 PIN BAYONET

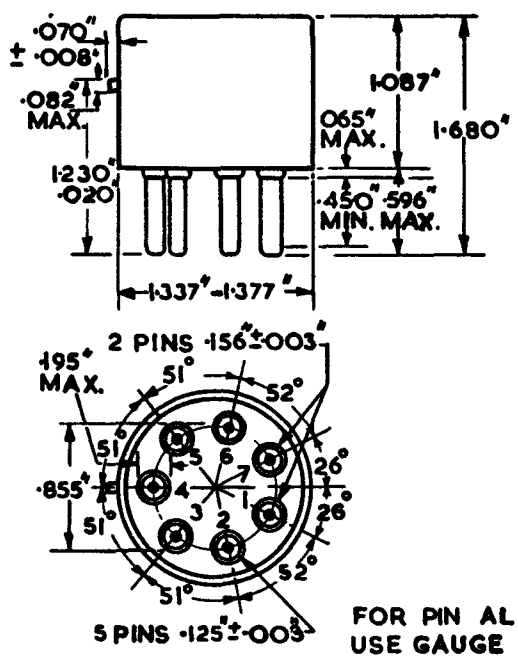

FOR PIN ALIGNMENT USE GAUGE No GA7–2

EXTRACTED FROM RETMA STANDARD ET – 103 – D OF MARCH 1955.

FOR DETAILS OF GAUGES SEE RETMA STANDARD ET-106-C OF JUNE 1958

DRAWING No.D54.
B7B BASE
MANDATORY

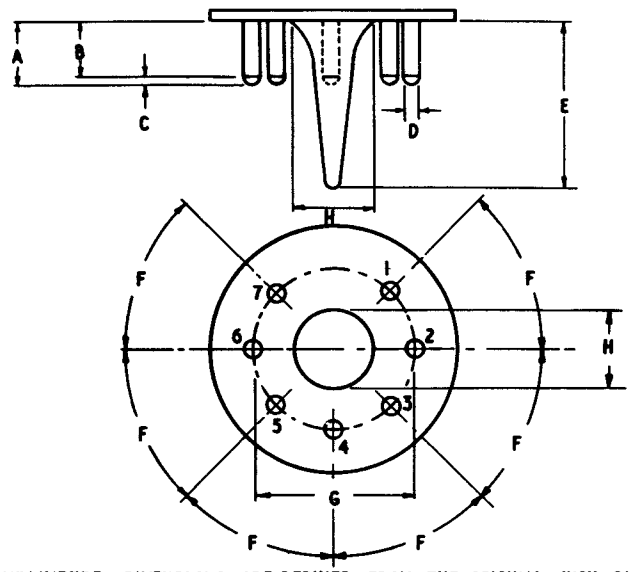

THE MILLIMETRE DIMENSIONS ARE DERIVED FROM THE ORIGINAL INCH DIMENSIONS

DIMENSIONS							
REF.	INCHES			DEGREES	MILLIMETRES		
	MIN.	NOM.	MAX.	NOM.	MIN.	NOM.	MAX.
A			0·281				7·13
B	0·180				4·58		
C	0·015				0·38		
D	0·048	0·050	0·052		1·220	1·270	1·320
E			0·750				19·05
F				45			
G		0·687				17·45	
H			0·420				10·66

NOTES:
1. THE DIMENSIONS FIXING THE POSITION OF PINS REFER TO THE FIXED END OF THE PIN AND ARE FOR INFORMATION ONLY. THE PIN DISPOSITIONS MAY BE CHECKED ONLY BY MEANS OF THE B7B. POSITION GAUGE.
2. THE DRAWING SHOWS THE NUMBERING OF THE PINS AS SEEN FROM THEIR FREE ENDS.
3. THE TIPS OF THE PINS SHALL BE ROUNDED OR TAPERED.

DRAWING No. D54A
B7B GAUGE
MANDATORY

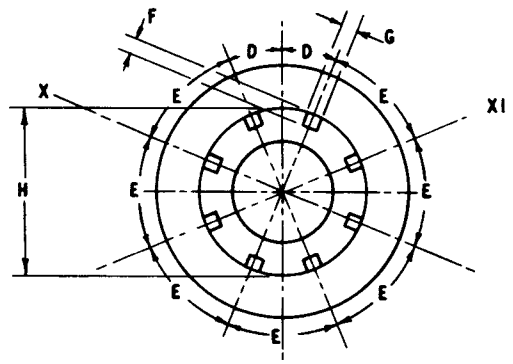

SECTION X-XI

THE MILLIMETRE DIMENSIONS ARE DERIVED FROM THE ORIGINAL INCH DIMENSIONS

REF	DIMENSIONS							NOTES
	INCHES			DEGREES	MILLIMETRES			
	MIN.	NOM.	MAX.	NOM.	MIN.	NOM	MAX.	
A	0·450				11·43			
C	0·6				15·3			
D				22½				
E				45				
F	0·064	0·065	0·065		1·626	1·650	1·650	
G	0·064	0·065	0·065		1·626	1·650	1·650	
H	0·7520	0·7525	0·7530		19·102	19·114	19·120	
K	0·290	0·295	0·300		7·37	7·50	7·62	

NOTES:

1. THE EIGHT SLOTS 'G' SHALL BE WITHIN 0·0004 IN. (0·01 mm) OF THEIR TRUE GEOMETRICAL POSITION IN RELATION TO THE DATUM HOLE 'A'

2. THE COMPLETE LENGTH OF THE PIN'S SHALL PASS INTO AND DISENGAGE FROM THE GAUGE WITH AN AXIAL FORCE OF 8 OUNCES OR LESS APPLIED TO THE VALVE GAUGING PROCEDURE 1.

APPENDIX V

THE MEASUREMENT OF THERMIONIC EMISSION

1. GENERAL

1.1. The emission from the cathode, when specified, may be measured by one of the methods described in the following paragraphs.

1.2. In general, it is not possible to measure the emission by drawing the current continuously from the cathode, as the cathode temperature may be disturbed or the valve itself damaged through overheating the emission collecting electrodes. Therefore the collecting voltage will be applied periodically at such a rate and with a sufficiently brief duration of the actual application of voltage that appreciable temperature changes in the valve during measurement are avoided. Two alternative methods are outlined in this appendix and the particular method to be applied will be indicated in the individual valve specification.

1.3. The important circuit parameters in emission testing are the value of collecting voltage and the cathode temperature. The latter is governed largely by heater power which must therefore be adjusted with special care. Test values of heater voltage and collecting voltage will be specified in individual specifications.

2. METHOD I

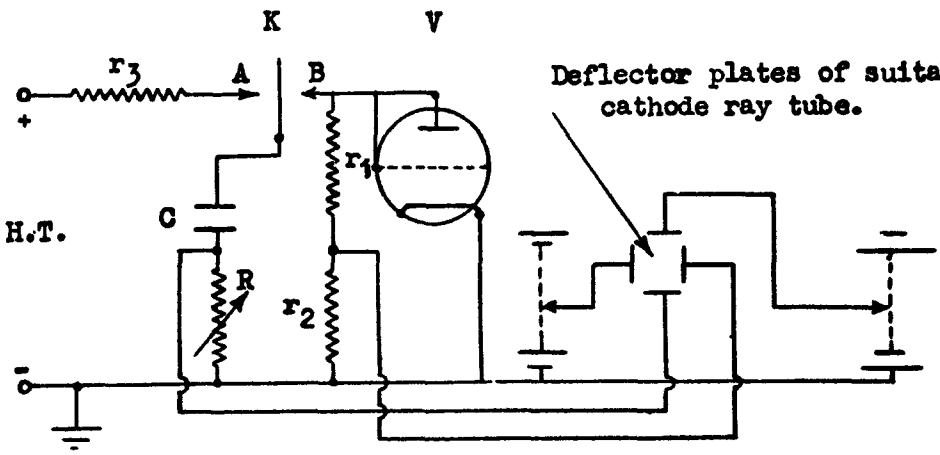

Fig. 1.

2.1. The circuit for this method of test is shown in Fig. 1. C is a capacitor of suitable value and capable of withstanding the voltages V_0 which are to be applied across the valve V under test. The cathode ray tube has its final anode at earth potential. "Shift" circuits may be used as shown to move the zero position of the spot to any desired position on the screen of the C.R.T. R is a non-inductive variable resistor of known value; r_1 r_2 is a non-inductive potentiometer of known resistance values. Resistor "r_3" is a current limiting resistor of suitable value.

2.2. Methods of operation

The capacitor C is charged to the potential V_0 of the H.T. supply by means of the key or contactor K connecting to terminal A. "C" is then discharged through valve V by moving K to position B. Voltages proportional to the collecting voltage V_a and the corresponding space current I_a appear simultaneously across the pairs of deflecting plates. As the capacitor progressively discharges, these voltages decrease and a characteristic curve of I_a versus V_a is traced on the C.R. Tube screen.

The deflecting voltages are

$$V_x = \frac{r_2}{r_1 + r_2} \times V_a; \quad V_y = I_a R$$

The ratio $\frac{r_2}{r_1 + r_2}$ and the resistance R are adjusted to obtain suitable scales for the X and Y deflection so that the form of the I_a, V_a curve gives a clear indication of the emission performance of the valve.

2.3. Calibration

By providing D.C. voltmeters across the shift voltages it is possible to calibrate the deflection directly in the following manner.

The shift voltages are adjusted so that the spot is returned to the arbitrary zero position from its position of maximum deflection during the test. The change in the shift voltages will then measure the maximum collecting voltage and current on arbitrary but easily determined scales dependent only on $r_1 r_2$ and R respectively.

In many cases, it may be sufficient to assume a linear relation between deflections and applied voltages and to provide scales on the tube face, or on a visor, calibrated in collector voltage and emission current.

3. METHOD II

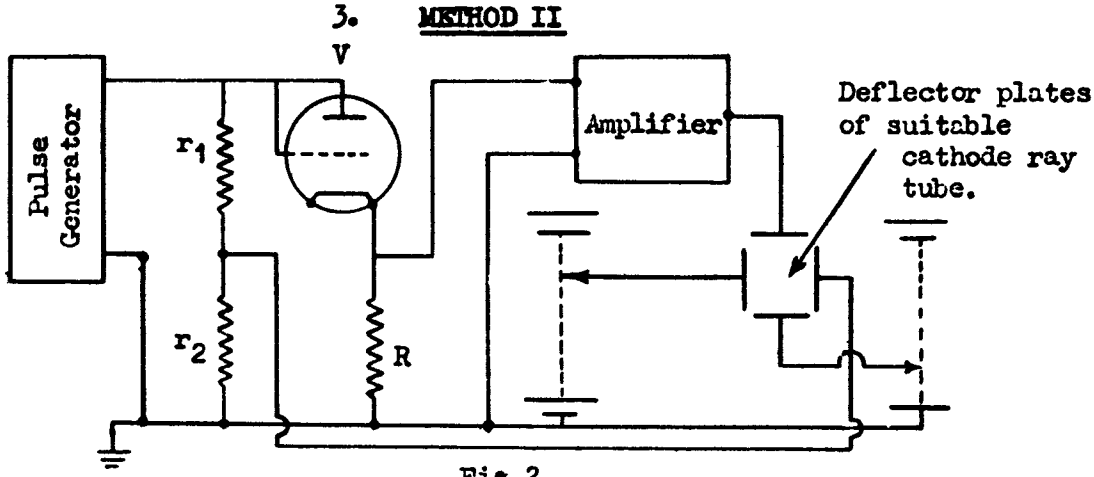

Fig.2.

3.1. The circuit for this method is indicated in Fig. 2. In principle the circuit conditions are identical with those of Method 1 but the contactor K of Fig. 1 is replaced by an impulse generator of suitable type, and an amplifier is interposed in the Y or current deflection circuit.

3.2. "Duty" Cycle

The duty cycle of the applied pulse, which is chosen to avoid damage to the valve or appreciable disturbance of the cathode temperature, shall be as detailed below.

3.3. Pulse Form.

The pulse shape shall be substantially half sine wave in character unless otherwise specified.

3.4. Pulse Length

The pulse length shall be approximately 2 μ secs. unless otherwise specified.

3.5. Repetition Frequency

A frequency of 500 pulses per second shall be used unless otherwise specified.

3.6. Limitation of Resistor R

The value of resistor R shall be limited so that the voltage appearing across R shall be not greater than 1% of the voltage across the potential divider resistors r_1, r_2.

4. Procedure of Testing to be applied to both methods of Test

4.1. Filament or Heater Voltage

The filament or heater voltage shall be the specified nominal value within the limits + 0%, -2%.

4.2. Application of "Collecting" Voltage

The full specified limiting voltage may be applied immediately to the valve or the applied voltage may be increased gradually and observations continued until either the specified current is obtained or the specified limiting voltage is reached.

4.3. Checking the apparatus

The following test should be carried out to ensure that the resistances and capacitances of the deflecting circuit components are not so excessive as to produce appreciable disturbances of the valve characteristics and to ensure that the calibrations are correct.

Substitute a non-inductive resistor of known value R_V chosen to give a curve of comparable size to that of the valve under test. With this resistor substituted, the trace on the screen should be a straight line free of appreciable looping and of slope $\frac{Ia}{Va} = \frac{1}{R_V}$ when the co-ordinates of the trace have been translated into the corresponding current I_a and Voltage V_a

JOINT SERVICE SPECIFICATION K1001

APPENDIX VI

LIFE TESTS

1. FOREWORD

Electronic valves, other than Reliable types, are not normally subject to life tests as a specification requirement. See, however, Section 13.

2. Cancelled

3. Cancelled

4. Cancelled

5. RELIABLE VALVES

The life testing of Reliable Valves shall be on a Sampling Inspection basis. The Inspection Levels and Acceptance Quality Levels for individual and group tests will be given in the individual Test Specifications. The sampling plans shall be in accordance with Appendix XI and the provisions for transfer between Normal, Tightened or Reduced Inspection given therein shall apply except as follows:-

~~Normal Inspection shall be used initially and until Reduced or Tightened Inspection is merited in accordance with paragraphs 7.1.2 and 7.1.3 of Appendix XI.~~

~~Selection of Sampling Plans. The sampling plans shall be in accordance with Table IIIA of Appendix XI except that lot sizes between 301 and 800 valves shall be considered in accordance with paragraph 2.6.1 of Appendix IX and lots containing more than 8000 valves shall be considered to consist of 8001 valves. Either single or double sampling may be used at the option of the manufacturer. Multiple sampling is not recommended for this application because of the time factor.~~

The life tests shall be divided into three classes:-

(a) Stability life tests

(b) Intermittent life tests of 500 hours

(c) Intermittent life tests of 1,000 hours

Individual test specifications may require all or part of the above procedure to be performed and may state alternative and/or additional test periods.

5.1. Stability Life Test

(a) Serially mark all valves from the sample

(b) Record referenced characteristic measurements after a maximum operation of 15 minutes at life test voltage and current conditions on the entire sample

(c) Operate at life test conditions for one hour (plus 30 minutes minus 0 minutes)

(d) Record referenced characteristic measurements at the end of this life test period. These measurements shall be taken immediately following the life test, or, alternatively, the valves may be pre-heated for 15 minutes under life test conditions, the 15 minutes preheating time being considered as part of the life test time.

(e) A defective valve shall be defined as a valve having a percentage change in a referenced characteristic greater than that specified in the individual test specification.

$$\text{Percentage change} = \frac{\text{Initial value - one hour value}}{\text{Initial value}} \times 100$$

(f) A lot failing to comply with the requirements of this test may be resubmitted but once for re-evaluation

(g) The conditions for the 15 minute preheating period specified in sub-paragraphs (b) and (d) above shall be deemed to have been met provided the electrode voltages and currents on a valve with nominal characteristics are the same as they would be on the same valve at life test conditions.

5.2. (This paragraph has been amended and incorporated in the introductory paragraphs above).

5.3. Intermittent Life Tests - 500 and 1000 hours

The valves used for intermittent life test may be selected at random from the valves used for the stability life test. When the stability life test is not included in the Test Specification the valves shall be selected from the lot.

The valves shall be operated under specified life test conditions. The mean electrode potentials shall not deviate by more than 5% from the specified values and the rated electrode dissipations shall not be exceeded. The heater or filament potential shall be maintained as close as practical to the specified value. If a heater-cathode potential is required during the life test, the resistance applied in series with this potential shall not exceed 5000 ohms.

Valves ahall be operated intermittently with not less than 12 interruptions occurring per 24 hours of life testing. The maximum frequency shall be one interruption per hour and the valves shall be operating for approximately 20 hours out of the 24-hour period. The 'on' and 'off' periods shall consist of the immediate application of the filament voltage and then the removal of filament voltage. Other electrode potentials may be applied continuously at the option of the manufacturer. The accumulation of the 'on' time shall be the only time considered in determining the life test time. The filament supply impedance shall not exceed 10% of the hot filament load impedance.

5.3.1. Regular Life Test

Regular life test shall be conducted for 1000 hours and acceptance shall be on the basis of the 500-hour and 1000-hour requirements stated on the individual Test Specification. Regular life test shall be in effect initially and shall continue in effect until the conditions for reduced hours life test have been met.

5.3.2. Reduced Hours Life Test

Reduced hours life test shall be conducted for 500 hours or as otherwise stated in the Test Specification and acceptance shall be based on the 500-hour end-point limits or as qualified above.

In the event of no lot failure in three consecutive 1000-hour life test batches the subsequent batches become eligible for reduced hours life test.

Loss of eligibility for reduced hours life test shall ~~be incurred on two or more life test lot failures occurring in the last three 500-hour life tests.~~ COULD IF ANY TEST LOT FAILS AT 250 HOURS SINCE LAST END

5.3.3. The life test sample shall be read at the start of the life test period and at 500 hours plus 48 hours minus 24 hours and at 1000 hours plus 48 hours minus 24 hours when applicable. Additional reading periods may be stated in the test specification and may also be used at the discretion of the manufacturer.

5.3.4. Acceptance Conditions

The lot shall be accepted providing:-

(a) The change in the average characteristic in the life test sample specified for life test control of averages is not exceeded. The average percentage change shall be computed from the individual changes for each valve in the life test sample from the zero hour value for the referenced characteristic or characteristics. For the purposes of computation of this average percentage change the absolute values of the individual changes for each valve in the life test sample shall be used. Any valve found inoperative during the life testing shall not be considered in the calculation of this average.

(b) The specified group and individual AQLs are not exceeded.

5.3.5. A lot failing to comply with the requirements of this test, may be resubmitted but once for re-evaluation.

5.4. Equivalents of Intermittent Life Test Conditions

These shall be defined as those conditions which yield the same incidence of failures. These conditions shall be interpreted as having the same heater voltage, heater-cathode voltage and interruptions as the intermittent life test.

The electrode voltages shall be selected to give element dissipations which are approximately equal to those specified for intermittent life test, i.e. not less than 80%.

The voltages shall be selected to be within plus 100% and minus 50% of the intermittent life test voltages.

5.5. All valves shall be tested at room temperature.

5.6. Order of Evaluation of Life Test Defects

In the event of a valve being defective for more than one attribute characteristic, the lowest number characteristic in the following table shall constitute the failure:-

1. Inoperatives (see paragraph 5.14)
2. Heater current
3. Heater-cathode leakage
4. Grid current
5. Mutual conductance
6. Anode current
7. Electrode insulation
8. Mutual conductance change

JOINT SERVICE SPECIFICATION K1001

APPENDIX VII

VALVE PIN AND FLYING LEAD PROTECTORS

(I) PIN PROTECTORS

1.1. GENERAL

B7G and B9A based valves have pins which are liable to be bent and thus may not safely engage with holder contacts. To prevent this all such valves are to be supplied fitted with Pin Protectors as described and illustrated in this appendix.

1.2. MATERIAL

The Pin Protectors shall be made of an approved moulded material not liable to appreciable deterioration in quality or dimensions under any climatic conditions. Materials approved for this purpose are listed in Schedule A below.

1.3. TESTS

The Pin Protectors shall conform to all dimensions shown on the appropriate drawing and be accepted with only slight finger pressure by the corresponding assembly gauge.

1.4. FINISH

Mouldings shall not be machined except for the removal of flash.

1.5. QUALIFICATION APPROVAL

Not less than six Pin Protectors of each type shall be sent for Qualification Approval to A.S.W.E. These may be submitted either by the valve manufacturer or by the sub-contractor manufacturing the protectors.

SCHEDULE A

Approved Phenolic Resin Moulding Materials

Material	Manufacturer
X262/2	Messrs. Bakelite Ltd., 12 Hobart Place, London, S.W.1.
X5337	" " " " " " " "
X4892/4	" " " " " " " "
X17163	" " " " " " " "
"Rockite" 3920	British Resin Products, 21, St. James' Square, S.W.1.
A.864	James Ferguson and Co. Ltd., Prince George's Road, S.W.19
"Carinox" TGH Polystyrene Heat Resistant, Toughened Grade.	Shell Chemical Co. 170 Piccadilly, London, W.1. (AK1)

SCHEDULE B

Manufacturers of Approved Pin Protectors

Protectors	Manufacturer	Code
B7G	Messrs. Insulators Ltd., Leopold Road, Angel Road, Edmonton, London, N.18	INS
B7G	Kent Mouldings, Footscray, Sidcup, Kent.	KFA
B7G B9A	British Mechanical Productions Ltd., Barton Hill Works, Bristol, 5.	BMP
B7G	Electrothermal Engineering Ltd., 270 Neville Road, London, E.7.	ETH/VP
B7G B9A	Enalon Plastics Ltd., South Premier Works, Drayton Road, Tonbridge, Kent.	EPL

DRAWING No. 1.

B7G PIN PROTECTOR AND PROTECTOR GAUGE

FIG. 1. PIN PROTECTOR

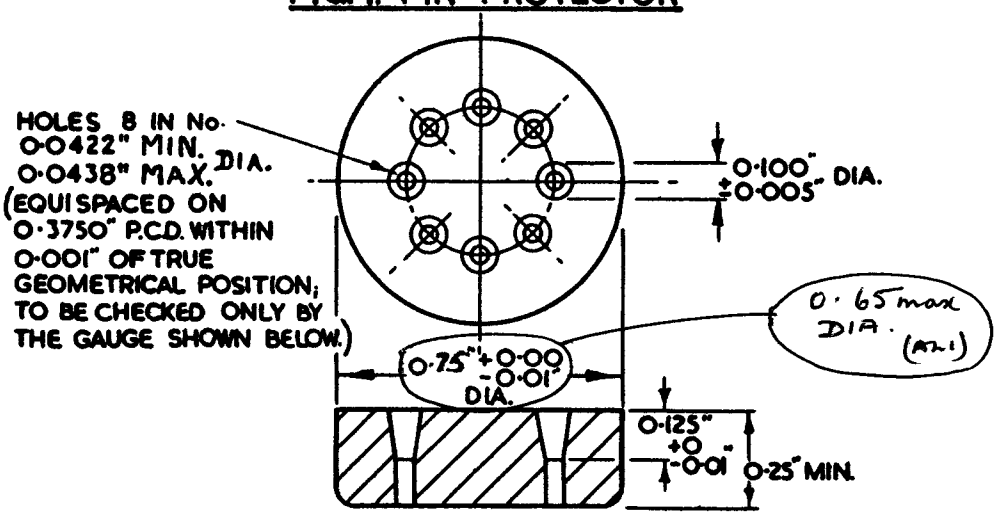

FIG. 2. PROTECTOR GAUGE

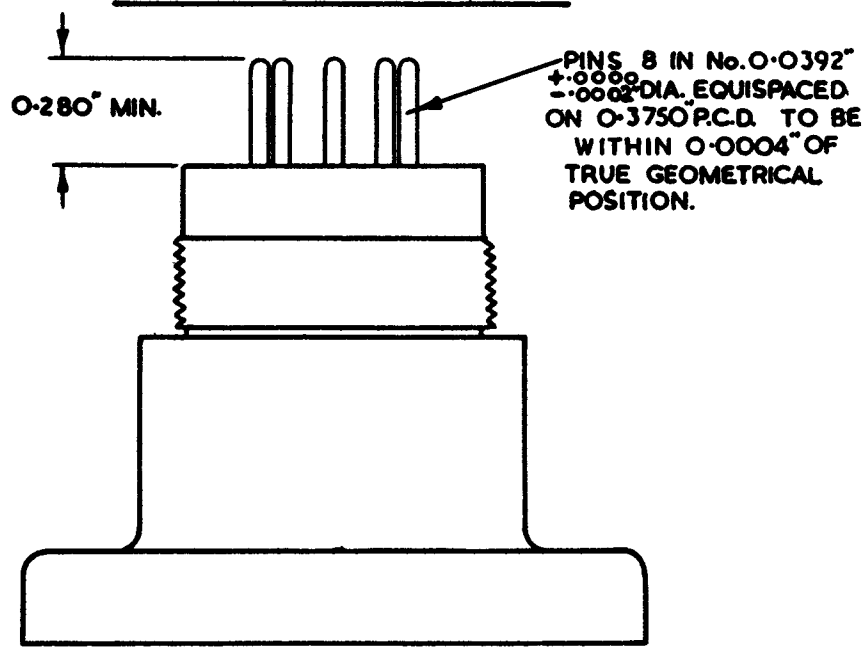

DRAWING No. 2

B9A PIN PROTECTOR AND PROTECTOR GAUGE

FIG.1 PIN PROTECTOR

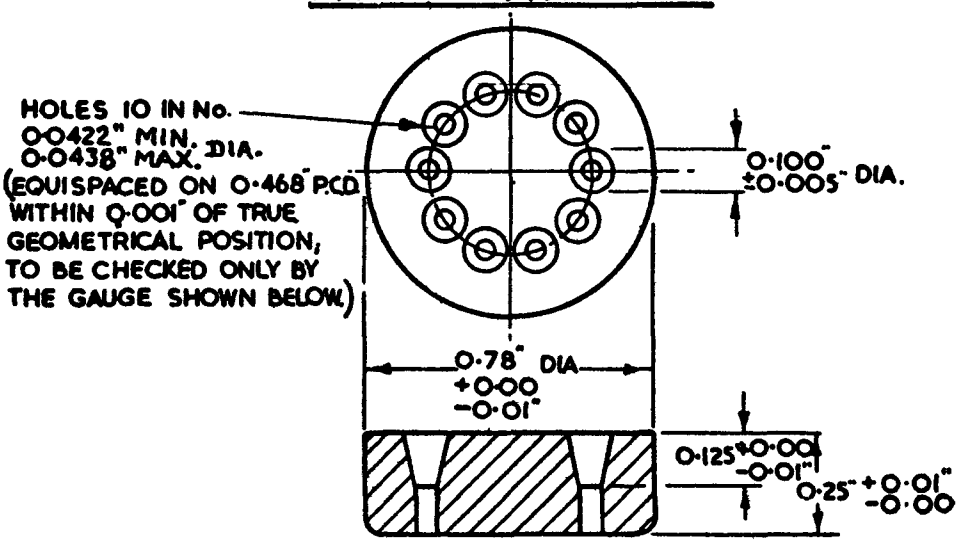

FIG.2 PROTECTOR GAUGE

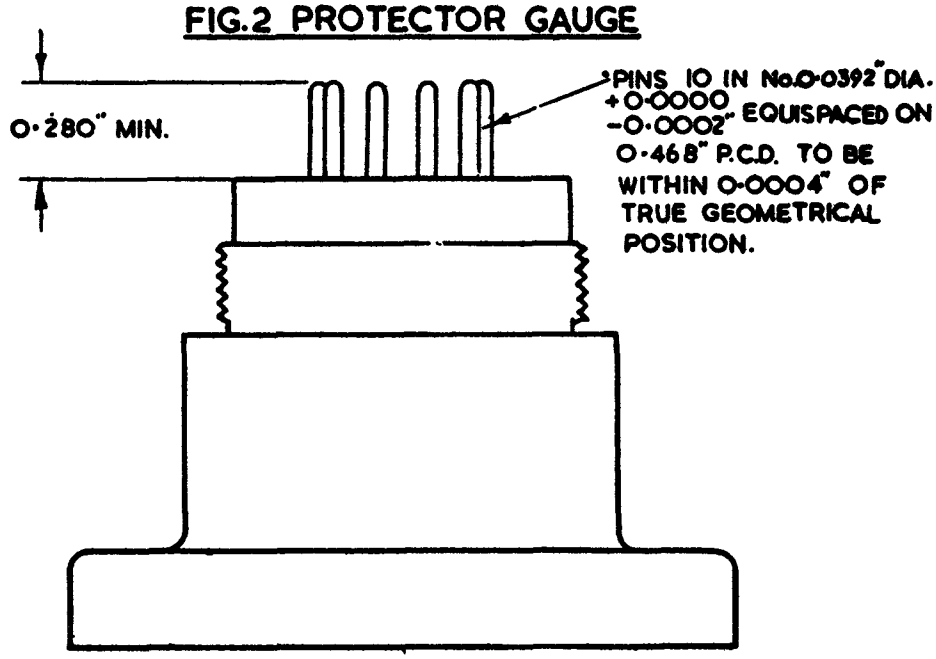

(II) FLYING LEAD PROTECTORS

2.1. Flying lead valves having B7G/F or B9A/F bases shall be supplied fitted with protective discs, which unless the contract specifies otherwise shall be type 1 below (polythene).

Alternatively, in place of the Type 1, polythene discs, B7G/F and B9A/F flying lead valves may, at the discretion of the manufacturer be fitted with the appropriate B7G or B9A pin protector specified in Section 1 of this Appendix.

All other flying lead types shall be supplied without protective discs unless the contract specifies otherwise.

Two types are suitable:-

Type 1 Polythene Discs These are suitable for packaging purposes to protect the valve base and leads during transit.

(Note: This type is not suitable for wiring into equipment).

B7G/F and B9A/F see Page 6 of this Appendix

Type 2 P.T.F.E. Insulating Discs These will withstand the temperatures expected from normal soldering techniques in wiring the valve into circuit and also the environmental temperatures applicable to airborne equipment.

See Page 8 of this Appendix.

2.2 Qualification Approval

Not less than 6 samples of each type shall be sent for Qualification Approval to A.S.W.E. These may be submitted by either, the valve manufacturer or by the sub-contractor manufacturing the protectors.

SCHEDULE C

Manufacturers of Approved Lead Protectors

Material	Base	Manufacturer

TYPE I POLYTHENE DISCS.

(SUITABLE FOR PACKAGING ONLY)

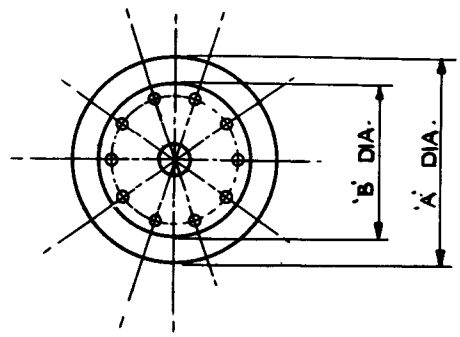

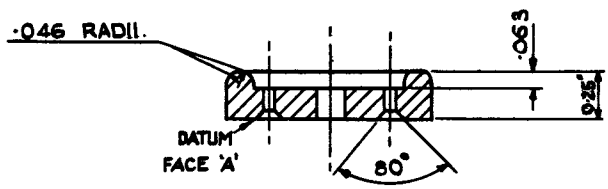

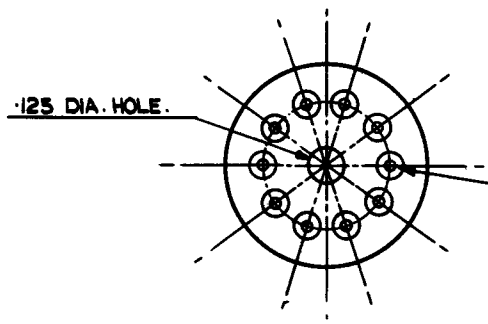

'D' HOLES {·025" MIN. / ·032" MAX.} DIA.
C'S'K TO ·106 DIA.
EQUI-SPACED ON
'C' P.C. DIA. HOLES POSITIONAL.
TOLERANCE ZONES DATUM FACE 'A'
0·003" DIA.

GENERAL TOLERANCES: ± 0·005"

MATERIAL: POLYTHENE

FINISH: NATURAL.

TYPE OF BASE	DIMENSIONS (INCHES) 'A' OVERALL DIA.	'B' INTERNAL FLANGE DIA.	'C' HOLE P.C. DIA. NOM	'D' Nº OF HOLES
B7G/F	0·620	0·470 -0·478	0·375	8
B9A/F	0·775	0·563 -0·571	0·468	10

June 1966 (unchanged)

B.B.D. LEAD PROTECTOR.

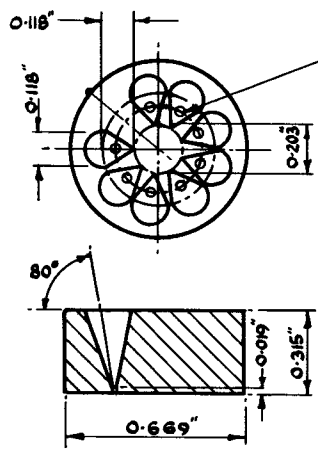

8-HOLES 0·0295" MIN. DIA.
0·0335" MAX.
SPACED AT 40° INTERVALS
ON A 0·335° P.C.D.
WITHIN 0·004" OF TRUE
GEOMETRICAL POSITION.

GENERAL TOLERANCES ± 0·005"

MATERIAL APPROVED PHENOLIC RESIN
FINISH CLEAN.

TYPE II P.T.F.E. INSULATING DISCS

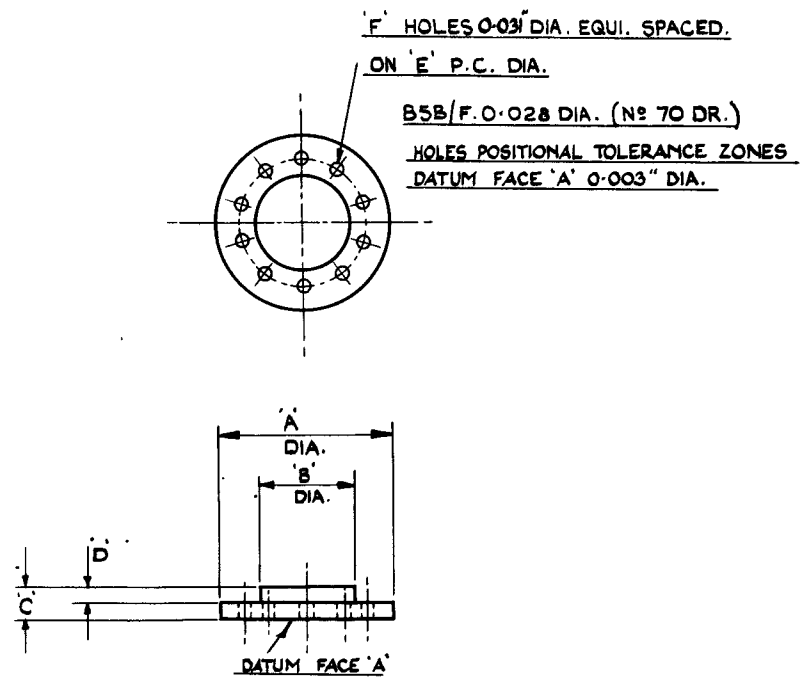

MATERIAL: P.T.F.E.

FINISH. CLEAN

GENERAL TOLERANCES ±0.005

TYPE OF BASE	DIMENSIONS (INCHES) 'A' OVERALL DIA.	'B' SPIGOT DIA.	'C' OVERALL DEPTH	'D' SPIGOT DEPTH	'E' HOLE P C DIA	'F' NUMBER OF HOLES	JOINT SERVICE CATALOGUE NUMBER
B5B/F	0·188	0·045 +0, -0·002	0·10	0·040	0·093	6	5970-99-972-8777
B7G/F	0·5	0·312	0·125	0·062	0·375	8	5970-99-972-8775
B8D/F	0·350	0·175	0·125	0·062	0·236	9	5970-99-972-8776
B9A/F	0·625	0·344	0·125	0·062	0·468	10	5970-99-972-8774

JOINT SERVICE SPECIFICATION K1001

APPENDIX VIII

ELECTRONIC VALVE MANUFACTURERS'
FACTORY IDENTIFICATION CODE

Valves shall be marked with the appropriate letters from the following list to show where the pumping process was completed. (See K1001, Section 4)

AB	Sylvania-Thorn, Enfield
AD	Thorn-A.E.I.(Brimar), Rochester
BC	Joseph Lucas, Birmingham
CC	Cathodeon, Cambridge
CF	20th Century Electronics, New Addington
CO	Newmarket Transistors, Newmarket
CS	Cathodeon, Southend
D	Mullard Radio Valve Co., Mitcham
DA	" " " " Blackburn
DB	" " " " Salfords
DC	" " " " Whyteleafe
DG	Associated Semiconductor Manufacturers, Southampton
DH	Societe Anonyme Philips, Brive, France
DJ.	WIENER RADIO WERKE, A.G., ABBEGASSE 1, VIENNA 14/89.
* E	Thorn-A.E.I., Brimsdown
EN	" " Sunderland
F	S.T.C., Paignton
FB	S.T.C., Footscray
FC	S.T.C., Lorenz, Esslingen, Germany
FE	S.T.C., Oldway (Additional to Paignton Factory at 'F' above)
FF	S.T.C., Harlow
G	Ericsson, Beeston
GA	(Ericsson), A.B. Svenska Elektronror, Stockholm, Sweden
HC	Hivac, Chesham
HR	Hivac, Ruislip
JA	S.G.S. Fairchild, Ruislip
JB	S.G.S. Fairchild, Agrate, Milan, Italy
JD	Elliott Bros. (London) Ltd. Borehamwood
JK	La Radio Technique, Suresne, Paris, France
JN	International Rectifier Co. (Gt. Britain) Ltd., Oxted
JT	Microwave Associates Ltd., Luton
K	Electronic Tubes, High Wycombe
L	C.S.F., Levallois-Perret (Seine), Paris, France
LB	C.S.F., St. Egreve, Grenoble, Isere, France
ME	E.M.I., Hayes
MR	E.M.I. (Valve Div.), Ruislip
N	Nore Electric, Southend
NQ	Texas Instruments, Bedford
NR	Texas Instruments, Nice, France
QG	ENGLISH ELECTRIC VALVE CO., CAPHAM ROAD, LINCOLN.
* DK	PHILIPS GMBH, 140 LEICHTENSTRASSE, KLAGENFURT
DL	N.V. PHILIPS GLOEILAMPFABRIEKEN, NIJMEGAN
DM.	N.V. PHILIPS STADSKANAAL, HOLLAND
DN	LA RADIO TECHNIQUE, GAEN. FRANCE.
DP	VALVO GMBH, HAMBURG, GERMANY
DQ	PHILIPS SPA, MILAN, ITALY
DR	PHILIPS AG, ZURICH SWITZERLAND
*	V. GILBERT PHOTOELECTRIC, ISLELWORTH.

O	Rank Cintel, Lower Sydenham
OS	" " Sidcup
P	Philips, Eindhoven, Holland
PA	Philips Teleindustri, Stockholm, Sweden
Q	English Electric Valve Co., Chelmsford
QB	Marconi W.T. Co., Great Baddow
QC	" " " Chelmsford
QD	English Electric Valve Co., Stafford
QE	" " " " Kidsgrove
QF	" " " " Nelson Res. Labs., Hixon
R	Ferranti, Moston
RA	" Edinburgh
RB	" Dundee
RC	" Chadderton, Oldham
S	A.E.I., Rugby
SB	" Lincoln
SC	C.F.T.H., Usine de Joinville, Seine, France
SD	S.E.S.C.O., Rue de L'Amiral, Mouchez, Paris, France
SF	C.F.T.H., Rue Mario-Nikis, Paris, France
T	British Tungsram, Tottenham
VA	Westinghouse, Chippenham
VF	M.C.P. Electronics, Alperton
VL	Hughes Int. (U.K.) Ltd., Glenrothes
VR	Brush Crystal Co., Hythe
W	(G.E.C.), Hirst Labs, Wembley (A.S.M. Ltd.)
WD	Claude General Neon Lights, Wembley
WE	A.S.M. Ltd., Hazel Grove
YC	Semiconductors Ltd., Cheney Manor, Swindon
Z	M.O. Valve Co., Hammersmith, W6.

OBSOLETE CODES

A	(Mullard, Blackburn, prior to Jan. 1951 (Thorn, Tottenham, prior to April 1964
AC	Thorn-A.E.I., Footscray
B	Edison Swan, Baldock, prior to Sept. 1945
BA	A.E.I., Woolwich
C	Edison Swan, Ponders End, prior to Sept. 1951
CE	20th Century Electronics, prior to March 1957
CN	Pye Industrial Electronics
DE	Mullard Radio Valve Co., Fleetwood
DF	" " " " Waddon
EA	Edison Swan, Ponders End
EB	" " Gateshead
EC	" " Tottenham

FD	S.T.C. Rochester
FDA	Alexandria, N.S.W., Australia
H	Hivac, Harrow
J	S.T.C., Crewkerne, prior to Jan 1946
J	Radar Electronic Equipment
JE	Elliott-Litton, Borehamwood
JQ	Associated Transistors, Ruislip
L	M.O. Valve Co., prior to Oct. 1951
M	Gramophone Co., Hayes
MA	E.M.I., Res. Labs., Hayes
MB	E.M.I., " " , Ruislip
MT	E.M.I., Treorchy
N	S.T.C., Footscray, prior to Aug. 1951
NP	Texas Inst., Dallas Rd., Bedford
OR	Rank Cintel, Rotunda
P	G.E.C., Shaw, prior to Aug. 1948
PDA	Philips, Hendon, Australia
R	Ferranti, Gem Mill, prior to July 1947
SA	A.E.I., Lutterworth
SDA	Amalgamated Wireless, Australia
SL	A.E.I., Leicester
SP	A.E.I., Peterborough
U	M.O. Valve Co., Bulmer, prior to Oct. 1945
U	Nucleonic and Radiological Div., Stratford
V	Cossor, Highbury, prior to Sept. 1945
~~V~~	~~Gilbert Photoelectrics~~
WB	G.E.C., Coventry
WF	A.S.M. Ltd., Broadstone
X	M.O. Valve Co., Springvale, prior to Oct. 1951
Y	M.O. Valve Co., Moray, prior to April 1945
YA	Leigh Electronics, Havant
YD	Semiconductors Ltd., Towcester
ZA	M.O. Valve Co., Gateshead, prior to March 1957
ZB	M.O. Valve Co., Perivale
ZC	M.O. Valve Co., Springvale, prior to Aug. 1957
ZD	M.O. Valve Co., Dover, prior to Dec. 1956
ZE	Osram G.E.C. Lamp Works, M.X.T. Dept., prior to March 1957

APPENDIX IX
RELIABLE VALVES

1. FOREWORD

1.1. This Appendix shall apply when the valve is specified in the Test Specification as a Reliable Valve.

1.2. Reliable Valves are defined as valves designed and manufactured to give continuity of operation superior to ordinary valves when used under Service conditions of shock and vibration.

2. TEST PROCEDURE FOR RELIABLE VALVES

All Reliable valves submitted to the Inspection Authority shall undergo the following tests as detailed in the Test Specification.

2.1. Group A Tests. All valves shall be inspected in accordance with Section 5.1 of the general specification and tested for insulation resistance and reverse grid current. Any failures will not count in any further assessment of quality.

2.2. Formation of Lot. All the remaining valves shall be formed into a Lot; see Appendix XI, Section 1, Clause 3.1.1.

2.3. Holding Period. The valves assembled into the Lot shall be stored for a period of not less than 28 days. Those valves normally fitted with pin protectors shall be stored with the pin protectors in position. During the holding period sampling inspection will be made to the schedule detailed below and in accordance with Appendix XI, Sections 1 and 2, unless otherwise stated.

2.4. Sampling Inspection Tests

2.4.1. Electrical Tests

2.4.1.1. Sampling Inspection by Attributes. Sampling Inspection by Attributes shall be used when an Inspection Level and an Acceptable Quality Level (AQL) are given in the Test Specification. The sampling plans for these tests will be determined by the individual specification and by Appendix XI, Section 1. The primary electrical tests will be at Inspection Level II and to an AQL of 0.65%. These tests will be grouped together in Group B and will be subject to an overall AQL of 1%. The secondary electrical tests will be at Inspection Level I and to an AQL of 2.5%. These tests will be grouped together in Group C and will be subject to an overall AQL of 6.5%. Certain electrical tests which may be destructive, difficult to perform, require specialist testing, or are loosely controlled will be performed at Inspection Levels S4 or S2 and to an AQL or 6.5%. These tests will be grouped together in Group D and, in general, there will be no overall AQL given for this group. When an Inspection Level is specified for each individual test the manufacturer may select a different sample for each test. If he elects to use a single sample of the specified number of valves for all the tests in the group any failure shall be removed forthwith from the test and shall count but once in the evaluation of the AQL values. It will not be necessary to replace any defective valve which has thus been removed. If the manufacturer elects to use separate samples for each test the acceptance and rejection numbers for the combined AQL for the total failures shall be the same as if a single sample had been used throughout.

2.4.1.2. Sampling Inspection by Variables. Sampling Inspection by Variables shall be performed in accordance with Appendix XI, Section 2, and with the Test Specification.

2.4.2. Mechanical Tests

2.4.2.1. Glass Envelope Strain Test. This test shall be as given in Section 7 of the general specification. This is not a destructive test and valves which pass will be accepted for delivery.

2.4.2.2. Base Strain Test. This test shall be as given in Section 7 of the general specification or as amended by the Test Specification. This is a destructive test and valves used for this test will not be accepted for delivery.

2.4.2.3. Lead Fragility Test. This test shall be as given in Section 5 of the general specification. This is a destructive test and valves used for this test will not be accepted for delivery.

2.4.2.4. Vibration and Shock Tests. The Vibration and Shock Tests shall be grouped together in Group E and shall be performed on a sampling basis; they shall include one or more of the following tests:-

2.4.2.4.1. Resonance Search Test. This test shall be as given in Section 11 of the general specification. This is not a destructive test and valves which pass will be accepted for delivery.

fourth lot fails, when on reduce
preceding lots shall be tested an
be re-instated until the above co
been satisfied.

2.4.2.4.2. Fatigue Test. This test shall be as given in Section 11 of the general specification. This is a destructive test and valves used for this test will not be accepted for delivery. An alternative form of reduced inspection may be instituted in which these tests are done on every fourth lot, after reduced inspection has been merited, provided that

(a) production is continuous

(b) the three preceding lots have been accepted.

If the fourth lot fails, when on reduced inspection, the three preceding lots shall be tested and normal inspection shall be re-instated until the above conditions have again been satisfied.

2.4.2.4.3. Shock Test. This test shall be as given in Section 11 of the general specification. This is a destructive test and valves used for this test will not be accepted for delivery. Shock testing is waived when ten successive lots have been tested and there has been no individual failures for shock test. Shock testing shall be resumed when production becomes discontinuous or at twelve monthly intervals, whichever is the shorter period. A single individual failure in any sample shall cause reversion to normal inspection.

2.4.3. Life Tests. The electrical life tests will be generally grouped together in Group F and will be performed on a sampling basis. The general requirements of these tests will be based on the procedure given in Appendix VI or as given in the Test Specification. In addition, selected tests may be required at intervals during life testing. Intermediate failure rates and the overall AQL will be stated in the Test Specification. These tests are destructive and valves will not be accepted for delivery except those which pass the stability life test.

2.5. Retests After Holding Period. At the end of the Holding Period all the valves in the Lot, excluding those used for the destructive Sampling Inspection Tests shall be tested for air leaks and open or short circuits between electrodes. A lot will be accepted if the number of inoperative valves as defined above does not exceed 0.5%. For other tests as detailed in the Test Specification the maximum allowable failure will be specified.

2.6. Sampling Inspection Procedure for Small Lot Sizes. DEF-131A allows the following minimum lot sizes for acceptance on one reject.

Insp. Level II			Insp. Level I			Insp. Level S-4			Insp. Level S-2		
AQL			AQL			AQL			AQL		
0.65%	1%	1.5%	1.5%	2.5%	4%	2.5%	4%	6.5%	4%	6.5%	10%
281	151	91	281	151	91	151	91	26	1201	151	26

Thus the smallest lot sizes for the usual CV4000 Specifications, when amended by the change of IA to S-4 and IC to S-2, would be 281.

For lot sizes between 151 and 500, where individual and combined AQL's are specified, only the combined AQL shall be used. Where no combined AQL is specified the individual AQL's shall be increased as follows:-

for Inspection Level II — 1% AQL
" " I - 2.5% AQL
" " S-4 - 4.0% AQL
" " S-2 - 6.5% AQL

For lot sizes between 91 and 150, the combined AQL's for electrical tests in Group B shall be increased to 1.5%, in Group C shall be increased to 4% and in other Groups, 2.5% AQL shall be increased to 4% and 6.5% increased to 10%.

/For lot

For lot sizes below 91, deferred acceptance can be applied over 4 or 5 consecutive lots, as follows:-

Group B	8 valves per week, 1 reject allowed over 4 weeks.
Group C	3 valves per week, 1 reject allowed over 4 weeks.
Group D	2 valves per week, 1 reject allowed over 4 weeks.
Group E	As for Group D
Group F (Life Tests)	4 valves per week. If no failures have occured at the end of the fourth week in any of the life test valves, accept the first lot and remove the valves from test. If no failures have occured at the end of the fifth week, accept the second lot, and so on, until the fourth lot has been accepted at the end of the eighth week. Continue acceptance if there is no more than one failure in any group of 16 individuals tested.

Alternatively, test three valves over a five week period.

(The first procedure gives a life test time of approximately 640 hours and the second 800 hours).

2.6.3. Production Rate Less than Fifty Valves Per Week. Since the test sampling procedures described above are not applicable to a rate of manufacture of less than fifty valves per week, the Test Specification or contract documents will indicate where 100% testing shall not be used and will specify the requirements for the destructive tests for such cases.

APPENDIX X

MECHANICAL TEST APPARATUS

GENERAL

This Appendix specifies certain apparatus necessary for the mechanical testing of electronic valves.

CONTENTS

1. Outline Drawings.

Drawing No.	Drawing Title
1	Deflection Cone for Miniature Valve Base Strain Test.
2	Shock Testing Machine.
3	Valveholder for Shock Tests.

2. Microphony Impact Tester.

3. Vibration Noise Tester.

DRAWING No. 1.

DEFLECTION CONE FOR MINIATURE VALVE BASE STRAIN TEST.

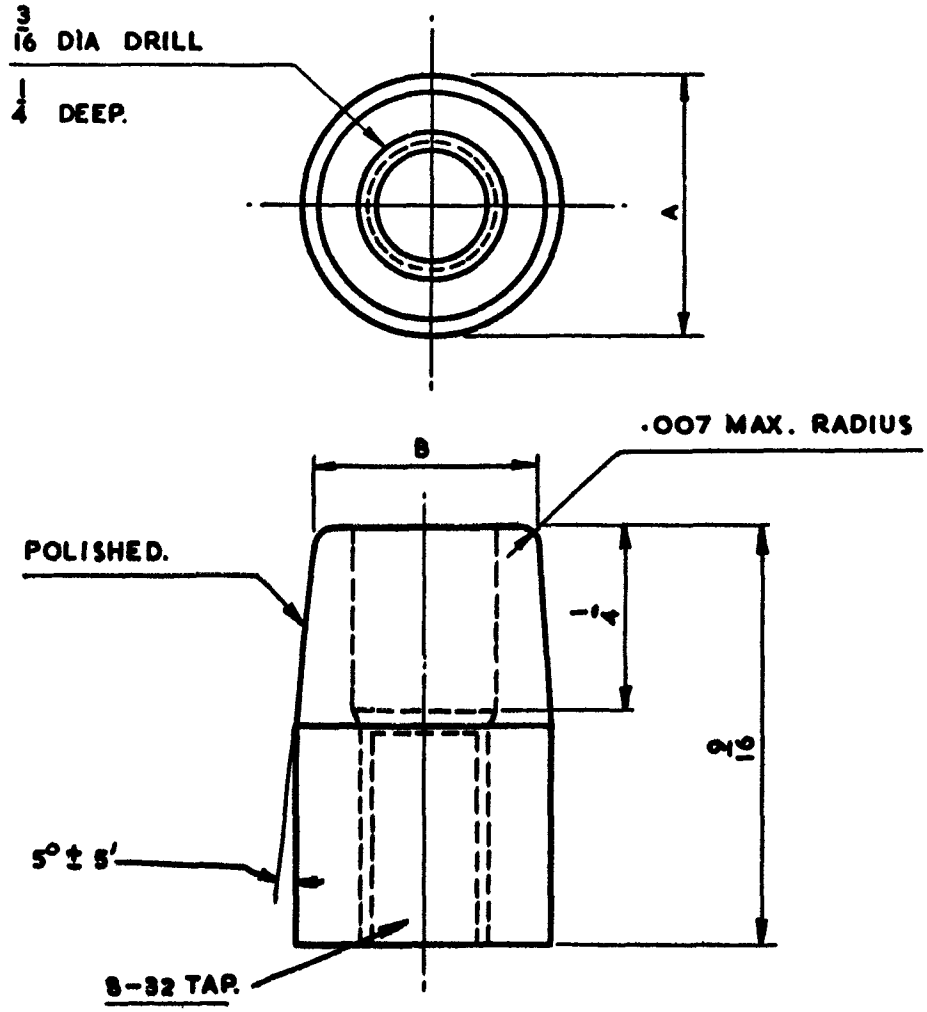

MAT[L] STAINLESS STEEL.

DEFLECTION CONE.	VALVE TYPE.	DIMENSION A.	DIMENSION B.
A	B7G	.375 ± .002 DIA.	.325 ± .002 DIA.
B	B9A	.468 ± .002 DIA.	.418 ± .002 DIA.

NOTE:- VARIATIONS ON FRACTIONAL DIMENSIONS SHALL BE, UNLESS OTHERWISE STATED, 1/4 OR LESS ± .008, OVER 1/4 ± .015

DIMENSIONS IN INCHES.

DRAWING No. 2

SHOCK TESTING MACHINE

ILLUSTRATIVE ONLY

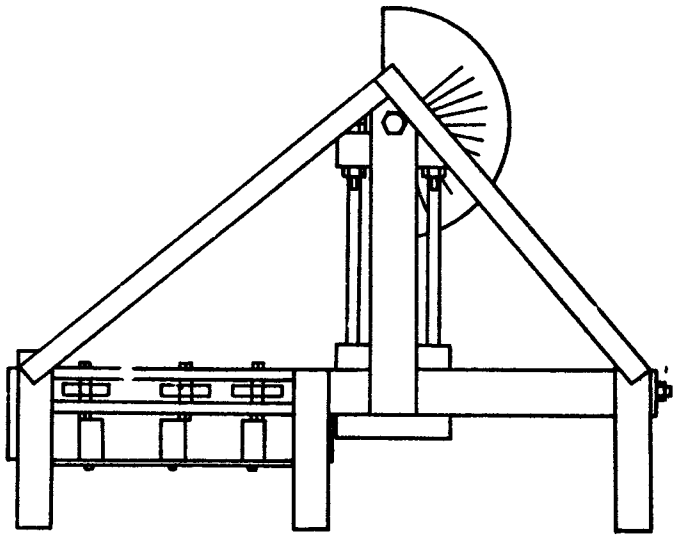

SIDE VIEW

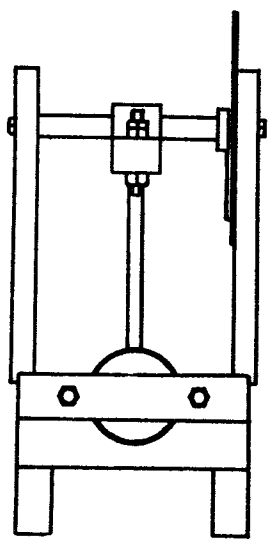

END VIEW

NOTE

FOR FURTHER INFORMATION APPLY TO : -

THE OFFICER-IN-CHARGE,

SERVICES VALVE TEST LABORATORY,

ADMIRALTY,

HASTE HILL,

HASLEMERE, SURREY.

DRAWING No. 3.

VALVE HOLDER FOR SHOCK TESTS

ILLUSTRATIVE ONLY

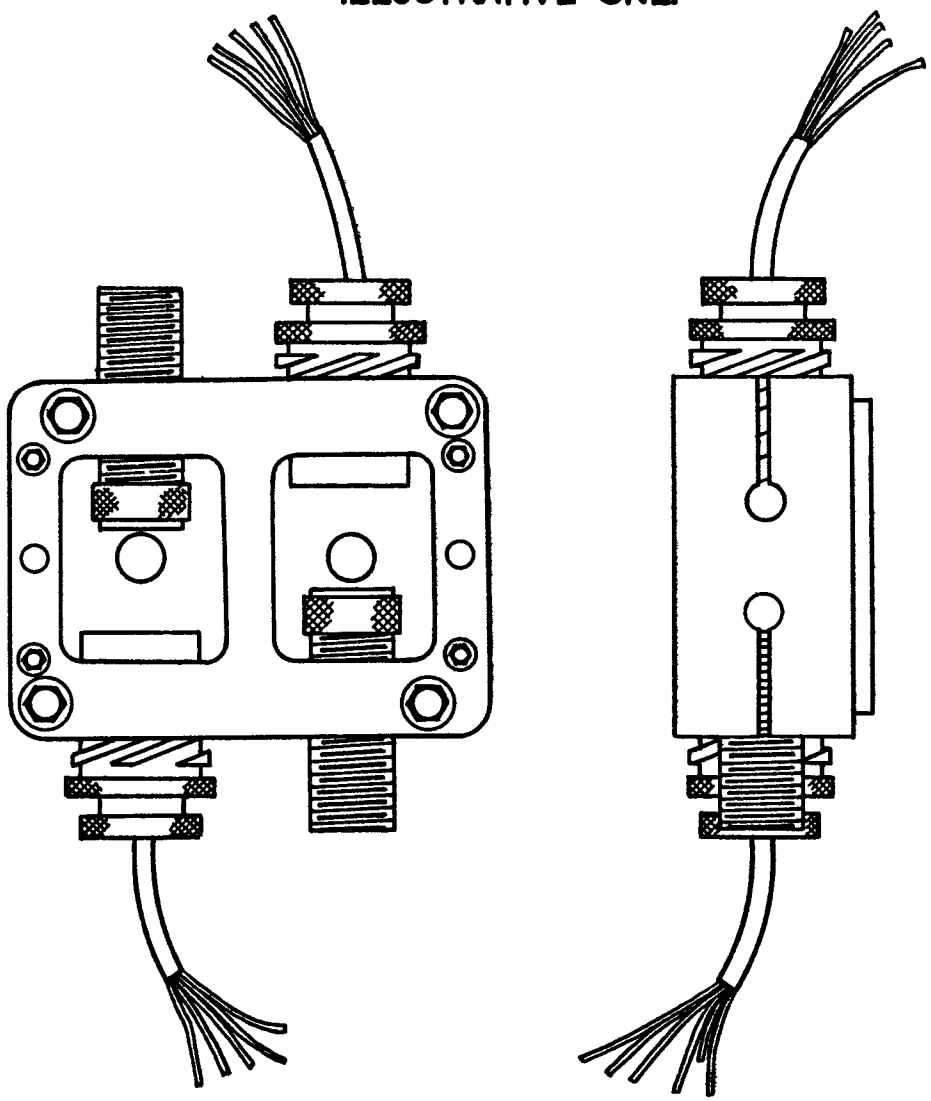

NOTE

THESE ILLUSTRATIONS HAVE BEEN EXTRACTED FROM DRAWING 184—JAN. FOR FULL DETAILS AND CONSTRUCTIONAL DRAWINGS APPLY TO THE TVC OFFICE.

2. MICROPHONY IMPACT TESTER

2.1 The Microphony Impact Tester is suitable for testing miniature and sub-miniature valves. It subjects the valve under test to an impact of 50g with a sensibly sine-wave distribution - see figure 2 below.

2.2 The Block schematic shows the arrangement of the equipment. It consists of a light hammer freely pivoted about a horizontal axis and is electro-magnetically released to strike a duralumin block upon which the valve under test is rigidly clamped. The block is resiliently mounted upon foamed neoprene of suitable mechanical characteristics and in order to eliminate high order frequencies from the acceleration impulse the impact is given to the block through a thin rubber plug fitted to the hammer head. The hammer and block are calibrated to give 50g on standard type equipment. The microphony transient voltage output from the valve is measured on a peak to peak indicator, see figure 1.

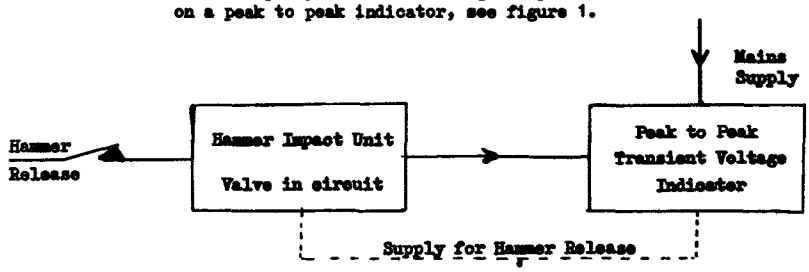

FIG. 1

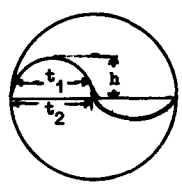

t_1 at $\frac{1}{2}h$ = 200/uS (approx)
t_2 at 0h = 350/uS (approx)
h = 50g

FIG. 2

2.3 The hammer with its rubber plug and the block with its rubber pad will be periodically returned to the design authority for check calibration. It is essential that the bearings of the hammer arm are regularly lubricated.

2.4 The operation of the peak to peak transient voltage amplifier/indicator is more fully described in Clause 4.2. of Appendix XII.

3. VIBRATION NOISE TESTING

3.1 The valve shall be vibrated in the specified directions at the required frequency. The required frequency and specified acceleration shall both be adjusted to an accuracy better than 10% of their stated values.

3.2. The waveform of the vibration shall be sensibly simusoidal with a total harmonic distortion of not more than 5% at any frequency within the range.

3.3. Where the swept frequency vibration test is specified, the rate of change of frequency shall not exceed one octave per minute from 25 c/s to 200 c/s and 100 c/s per minute between 200 c/s and 500 c/s and 250 c/s per minute between 500 c/s and 2.5 Kc/s.

Where approved high sensitivity recording equipment is being used the rate of sweep shall not be less than 15 seconds per octave up to 200 c/s and not greater than 45 seconds per octave above 200 c/s and up to 2.5 Kc/s.

The time of rise of the indicator to full-scale deflection shall not be greater than one fiftieth (1/50) of the sweep time per octave up to 200 c/s and not greater than one one hundred and fiftieth (1/150) of the sweep time per octave above 200 c/s and up to 2.5 Kc/s.

3.4. The acceleration shall be measured using a barium titanate accelerometer mounted rigidly adjacent to the valve and capable of monitoring acceleration during actual test. The accelerometer shall not possess a resonance below 20 Kc/s.

3.5. The accelerometer and its associated amplifier shall be calibrated at 50 c/s and at the lowest frequency to be used in the test.

3.6. The output from the accelerometer and its associated amplifier shall be constant for constant g to within $\pm$ 0.5 dB over the range 40 c/s to 2.5 Kc/s and within $\pm$ 2 dB at 25 c/s.

3.7. The valve under test shall be rigidly mounted on the vibration table by means of a clamp. The table shall be of approved construction giving a minimum of spurious vibrations or resonances in the specified frequency range.

JOINT SERVICE SPECIFICATION K1001

APPENDIX XI

ACCEPTANCE SAMPLING

GENERAL

Acceptance sampling is divided into two systems. One determines the acceptance of valves on a qualitative basis and tests are made on a go-no-go principle. This is called Acceptance Sampling by Attributes and the sampling plans and procedures for this system are given in Defence Specification DEF-131A. as implimented by Section 1 of this Appendix.

In the second system, measurements are made to determine where the characteristics lie with respect to the upper and lower specification limits, and also to determine the spread of these characteristics. This system is called Acceptance Sampling by Variables and the sampling plans are fully detailed in Section 2 of this Appendix.

Acceptance Sampling by Attributes shall be used when an inspection level and an A.Q.L. are acceptance inspection conditions in the Test Specification.

Acceptance Sampling by Variables shall be used when a variables inspection level, acceptance limit for sample dispersion, upper and lower limits for averages of samples are quoted, or as otherwise stated in the Test Specification.

SECTION I SAMPLING INSPECTION BY ATTRIBUTES

1 General

Unless otherwise specified by the Authority the statistical sampling procedures and tables used shall be those specified in DEF-131A.

1.1. Unit of Product

The unit of product is as defined by the detail specification.

1.2. Consecutive Lots

Consecutive lots are lots following in an uninterrupted succession submitted for acceptance when obtained from continuous production.

1.3. Continuous Production

Continuous production prevails when:-

(a) There has not been any change of design affecting Qualification Approval.

(b) There has not been any change in the place of manufacture.

(c) There has not been any break in production exceeding one month (or a longer period if approved by the Authority).

2./

2. Table of Cross-reference of Inspection Levels.

For Test Specifications issued prior to June 1966, the following cross-reference tables shall be used:-

K1001/App. XI, Sect.1 (for reference purposes)	DEF-131	DEF-131A
III	III	III
II	II	II
I	I	I
IA	IA	S-4
IB	IB	S-3
IC	IC	S-2
	L1, L2	S-1
	L3, L4	S-2
	L5, L6	S-3
	L7, L8	S-4
	Code Letter I	Code Letter H
	Code Letter O	Code Letter N
	All other Code Letters	Same Code Letter
	All A.Q.L.'s	Same A.Q.L.'s
	Code Letter and Sample Size	Sample size from same Code Letter

TABLE V SINGLE SAMPLING ONLY

Master Table for Reduced Inspection

Sample Size Code Letter	Sample Size	Acceptance Quality Levels																					
		0.24		0.4		0.65		1.0		1.5		2.5		4.0		6.5		10.0		15.0		25.0	
		Ac	Re	Ac	Re	Ac	Re	Ac	Re	Ac	Re	Ac	Re	Ac	Re	Ac	Re	Ac	Re	Ac	Re	Ac	Re
A, B C&D	2	B		B		B		B		0	1	B		B		B		B		1	2	1	2
E	2	B		B		B		B		0	1	B		B		1	2	1	2	2	3	3	4
F	3	B		B		B		0	1	A		B		1	2	1	2	1	2	2	3	3	4
G	5	B		B		0	1	A		B		1	2	1	2	2	3	3	4	3	4	5	6
H	7	B		0	1	A		B		1	2	1	2	2	3	3	4	3	4	5	6	7	8
I	10	0	1	A		B		1	2	1	2	2	3	2	3	3	4	4	5	6	7	9	10
J	15	A		B		1	2	1	2	2	3	2	3	3	4	4	5	6	7	8	9	12	13
K	22	B		1	2	1	2	2	3	2	3	3	4	4	5	5	6	8	9	11	12	14	15
L	30	1	2	1	2	2	3	2	3	3	4	4	5	5	6	7	8	11	12	12	13	16	17
M	45	1	2	2	3	2	3	3	4	4	5	5	6	7	8	10	11	13	14	15	16	20	21
N	60	2	3	2	3	3	4	4	5	5	6	6	7	9	10	12	13	15	16	18	19	24	25
O	90	2	3	3	4	3	5	5	6	6	7	9	10	11	12	14	15	18	19	23	24	A	
P	150	3	4	4	5	5	6	7	8	9	10	11	12	14	15	18	19	23	24	A		A	

Ac = Acceptance number

Re = Rejection number

A = Use next sampling plan above

B = Use next sampling plan below

SECTION 2. ACCEPTANCE SAMPLING BY VARIABLES

1. GENERAL

The following information on Acceptance Sampling by Variables has been extracted from various sources including "Control Chart Method of Controlling Quality during Production" American War Standard, April, 1942, "Quality Control Handbook" - J.M. Juran, and "Proposed Inspection Manual for Use in Conjunction with JAN-1A for the Acceptance Sampling of Reliable Tubes" - JETEC, March, 1952.

1.1. Purpose

This section of the Appendix establishes various methods and procedures for Inspection by Variables. It is intended for use in the determination of the acceptability of electronic valves supplied under Government contract.

2. GLOSSARY OF SYMBOLS AND TERMS

The following list of symbols, abbreviations and definitions will be found useful in the general appreciation of Sampling by Variables.

N — the number of valves in a lot

n — the number of valves in a sample

m — the number of sub-groups in a sample

(There are generally five valves per sub-group)

X — the observed value of a quality characteristic. Specific values are designated X_1 , X_2 - - - X_n .

$\bar{X}$ — the Average or Arithmetic Mean of n observed values.

$\bar{\bar{X}}$ — the average of the last 10 sample averages or Process Average.

$$\bar{\bar{X}} = \frac{\bar{X}_1 + \bar{X}_2 + - - - \bar{X}_{10}}{10}$$

x — the deviation of X from the average $\bar{X}$

i — the Class Interval between values of X.

R — the Range. The difference between maximum and minimum values of X in a sub-group.

$\bar{R}$ — the average value of the ranges R for m sub-groups in a sample.

$\bar{\bar{R}}$ — the average value of the ranges $\bar{R}$ for the last 10 samples.

s — the Standard Deviation for a sample of values X_1, X_2, - - - X_n about their mean value, $\bar{X}$

$$s = \sqrt{\frac{(X_1 - \bar{X})^2 + (X_2 - \bar{X})^2 + - - - - (X_n - \bar{X})^2}{n}}$$

and $$s' = s\sqrt{\frac{n}{n-1}}$$

where s' is the best estimate or σ , the Standard Deviation of the Universe.

Note: The Acceptance Limit for Dispersion may be estimated in other simpler ways. See sub-para. 3.7.1.

MEDIAN	the middle figure when results are tabulated according to ascending order of magnitude.
MODE	the value of the maximum of a frequency histogram.
DISPERSION	generally means Standard Deviation
MRSD	Maximum Rated Standard Deviation. This will be quoted on the Test Specification.
NORMAL DISTRIBUTION	an essentially uniform, symmetrical and uni-mode distribution.
SKEWNESS	defined as the degree to which the distribution is not symmetrical.
KURTOSIS	defined as the degree of "flatness" of the distribution.
ALD	Acceptance Limit for Sample Dispersion. The ALD shall be computed so that the probability of acceptance is 95% for a lot whose standard deviation is equal to the MRSD.
USLA	Upper Specification Limit for Averages of acceptable lots.
LSLA	Lower Specification Limit " " " " "
UAL	Upper Acceptance Limit for average of samples.
LAL	Lower " " " " " "
VIL	Variables Inspection Level. This is an index of the ability of a variables sampling plan to distinguish between good and bad lots.
a	a factor used in the computation of the ALD. It is a factor which converts sampling variations in terms of s into sampling variations in terms of range, and has been derived to give 95% assurance of acceptance if s is equal to the specified MRSD. See Table 1.
k	a factor used in the computation of Acceptance Limits for Sample Averages. It is a factor derived to ensure 95% acceptance of lots, the average of which is equal to the specification limit for averages of acceptable lots. The values of k quoted in Table 1 have been derived from

$$k = \frac{1.64}{n}$$

where 1.64 equals the single tail value equivalent to 5%.

3. PROCEDURE FOR ACCEPTANCE SAMPLING BY VARIABLES

The following simplified procedure has been proposed by the Joint Electron Tube Engineering Council and published in America on 13th March, 1952. This procedure may be required by CV specifications but is subject to change. Alternatively, other acceptance procedures may be used in agreement with the Approving and Inspection Authorities.

3.1. Variables Inspection Level

This shall be designated as an Acceptance Inspection condition on the Test Specification.

3.2. Sample Selection

Each sample shall be selected to represent fairly the quality of the lot. See also Section 1, para. 5.

3.3. Variables Sampling Plan

This plan is suitable for use where the distribution of the characteristics is essentially normal. Table 1 below gives details of sample sizes and multiplying factors for Normal and Reduced Inspection.

Table 1

NORMAL INSPECTION	LOT SIZE						REDUCED INSPECTION
	301-3200			Over 3200			
Variables Inspection Level	n	k	a	n	k	a	
V_1	15	0.42	3.17	25	0.33	2.98	V_1 & V_2
V_2	35	0.28	2.87	50	0.23	2.78	V_3
V_3	110	0.16	2.63	225	0.11	2.54	-

In this tsble the factors k and a have values as defined in para. 2 of this section, and they are used as follows:-

The Acceptance Limit for Sample Dispersion (ALD) is calculated from:-

$$ALD = a(MRSD)$$

The Acceptance Limits for Averages of Samples are determined from:-

$$UAL = USLA + k(MRSD)$$

$$LAL = LSLA - k(MRSD)$$

3.4. Normal Inspection

Sample sizes for Normal Inspection are given in Table 1

3.5. Reduced Inspection

Sample sizes for Reduced Inspection are given in Table 1. Reduced Inspection may be used if the following conditions are satisfied:-

(a) Each lot of the last 20 submitted under either Normal or Reduced Inspection shall have been acceptable;

(b) The Process Average and the Standard Deviation as calculated from samples selected from the last 20 lots, shall fall between the USLA and LSLA, and below the MRSD, respectively.

Normal Inspection shall replace Reduced Inspection whenever the above requirements are not satisfied.

3.6. Non-conforming Lots

A non-conforming lot shall be 100% reprocessed and/or retested by the manufacturer before re-submission to the Acceptance Sampling Test of Variables. The lot may be re-submitted for test by variables for a single non-conforming test item if this test is of such a nature that 100% retesting without reprocessing is sufficient. If the non-conforming test item is of such a nature to require reprocessing and retest, all characteristics of the lot which are specified for variables testing shall be re-inspected by variables.

If the values are considerably off-centre it may be necessary to test to tighter limits than those specified in order to move the average or Median within the limits for acceptance.

3.7. Operation of the Variables Sampling Plan where the Distribution of the Characteristics is Essentially Normal

3.7.1. Test for Lot Dispersion

Select and test a sample of size n as specified in Table 1. Divide the sample into random sub-groups of 5 valves each and determine the range R for each sub-group. Compute the average range $\bar{R}$ for the sample.

If the sample $\bar{R}$ is equal to or less than the ALD, accept the characteristic for dispersion. If $\bar{R}$ is greater than the ALD the lot shall be declared non-conforming with respect to dispersion. If an alternative routine method for determining Standard Deviation is used, this value of Standard Deviation shall be multiplied by 2.33, and the resulting value compared with the ALD.

3.7.2. Test for Lot Average

Using the same sample as in 3.7.1., compute the Average Value or Median Value of the characteristic. If the value of $\bar{X}$ is within, or on, the Acceptance Limits for Sample Averages, accept the characteristic for Lot Average. If the value is outside the acceptance limits, the lot shall be declared non-conforming with respect to the Lot Average.

3.8. Operation of the Variables Sampling Procedure where the Distribution of the Characteristics is Essentially Non-normal

Select the sample as in 3.7.1.

3.8.1. The MRSD need not be specified.

3.8.2. Compute the median value of the characteristic. If this value is on or between the USLA and the LSLA for the characteristic, accept the lot for the characteristic under consideration. If the value is outside the above limits, the lot shall be declared non-conforming for this characteristic.

3.9. Discrimination Values

The use of Variables Inspection Levels permits the specifying body to obtain various degrees of assurance that the specified lot parameters will be met. The discrimination of a Sampling Plan (i.e, the ability to distinguish between good and bad lots) is measured in terms of the number of Maximum Rated Standard Deviations between the process averages of lots which are acceptable 95% of the time and those acceptable 10% of the time. Table 2 shows how discrimination relates to Variables Inspection Level, lot size and type of inspection.

Table 2

NORMAL INSPECTION	Discrimination Values		REDUCED INSPECTION
Variables Inspection Level	LOT SIZE		Variables Inspection Level
	0-3200	Over 3200	
V_1	0.8	0.6	V_1 & V_2
V_2	0.5	0.4	V_3
V_3	0.3	0.2	-

JOINT SERVICE SPECIFICATION K1001

APPENDIX XII

MEASUREMENT OF VIBRATION NOISE, HUM, HISS AND MICROPHONY

1. GENERAL

This appendix describes amplifier-indicator systems suitable for measuring Vibration Noise, Hum, Hiss and microphony from valves.

The Noise, Hum and Hiss amplifier described in Clause 3, is basically a calibrated feedback amplifier system in which the valve under test forms the first stage. A calibration system is built in. For convenience, the test valve stage is in a small independent chassis unit, separate units being used for different valve types. The system can measure a wide range of amplitudes in the frequency range 50 c/s to 5 Kc/s.

The microphonic output from a valve subjected to impact in the equipment described in Appendix X, Section 2, shall be measured using an amplifier and peak to peak transient voltage indicator as described in Clause 4 of this Appendix.

2. MEASUREMENT OF VIBRATION NOISE, HUM AND HISS

2.1. Vibration Noise Measurement

The noise output from the valve under test shall be measured using an amplifier whose frequency response is 3 dB down on the mid-band gain at 30 c/s and 5.5 Kc/s, the response falling at the rate of approximately 6 dB per octave beyond these points. The amplifier described in Clause 3 below may be used.

2.2. Hum and Hiss Measurement

Hum shall be measured using the special feedback amplifier and indicator described in Clause 3 below.

Hum produced by the valve under test has two main components.

(a) Cathode Hum
(b) Grid Hum

These components are separately assessed by respectively short circuiting the grid resistor and capacitatively by-passing the cathode resistor. In addition, since the Hum components can be produced either by electro-magnetic or electrostatic coupling, each of the above measurements shall be performed by earthing each of the two heater connections in turn.

Hiss is measured under conditions which remove the Hum component by operating the heater on d.c. and at the same time short circuiting the grid resistor and by-passing the cathode resistor with a suitable capacitor.

3. FEEDBACK AMPLIFIER AND INDICATOR

This system is intended basically for the measurement of very low levels of hum and hiss but includes also an alternative condition in which the feedback is removed, making it suitable for normal levels of vibration noise. The amplifier is followed by a rectifier and moving coil type meter.

3.1. Amplifier Details

The Amplifier is intended primarily for the measurement of very low levels of Hum, Hiss and Vibration Noise but is also suitable for higher levels of audio frequency noise.

In the high sensitivity condition the amplifier shown in Figure 2 consists of V_2 and V_3, the valve under test, V_1, being arranged for convenience of operation, on a separate sub-chassis. The basic circuit arrangement for the valve under test is shown in Figure 1.

Overall feedback is applied in order that the readings referred to the input grid can be read directly and they will be unaffected by drift or by mutual conductance variations of individual valves under test.

The gain of the amplifier is adjustable in calibrated steps by means of S2 (Figure 2) which controls the feedback. Table 1 shows the sensitivities at various switch positions for one particular type of valve, namely CV4085. These sensitivities will not be applicable to other valve types but suitable circuit values will be shown in the appropriate valve specification.

For measurement of higher noise levels the output from the test chassis is injected into J1 (Figure 2), the maximum sensitivity then being 5 mV for full scale deflection.

The attenuator S3, which operates under both conditions shown above reduces the sensitivity by a factor of 10 or 100 according to the switch position.

3.2. Amplifier System Sensitivity

The figures shown in Table 1 represent the r.m.s. input voltage required from a sine wave source to give 0.4 full-scale deflection and these sensitivities will be satisfactory for the measurement of Hum and Hiss. For Vibration Noise a reduction of gain may be necessary.

TABLE 1

S2 POSITION	GAIN	R.M.S. INPUT
1	200,000	2 μV
2	100,000	4 μV
3	80,000	5 μV
4	40,000	10 μV
5	20,000	20 μV

3.3. Amplifier Frequency Response

The overall frequency response is selected according to the measurement being made. For low frequency Hum measurement, the high frequency Hiss component can be rejected by a simple low pass filter which is brought into circuit by S4 (Figure 2).

Two frequency characteristics are thus available, one for Hum and the other for Hiss measurement. During the latter measurement, introduction of a Hum component may be avoided if the heater of the test valve is operated on d.c. provided by an external accumulator and selected by S5 (Figure 2). A graph of the frequency response characteristic is shown in Figure 4.

3.4. Amplifier System Calibration

If close tolerance components are employed as indicated in the theoretical circuit diagrams and also as indicated in the specification for the test valve circuit, the overall gain in the high sensitivity condition should be within 5% of the indicated values as shown in Table 1.

The overall gain may be checked by means of the calibration input provided on the test valve sub-chassis. Application of a sinusoidal voltage of 0.5V r.m.s. at 1000 c.p.s. through 1 megohm to the test socket with S3 set to X1.0 and with full frequency response of the amplifier should give a full scale deflection of the meter in position 1 of Switch S2. The amplifier will read r.m.s., correctly but only for sine wave inputs, owing to the form of meter used. The use of this form of meter is desirable for the sake of robustness.

3.5. Amplifier Arrangement for Vibration Noise Measurement

The valve shall be operated at the specified frequency and acceleration whilst it is being held rigidly on the vibrating table with screened flexible leads making connection from the valve under test to the valveholder of the test valve sub-chassis operating under the specified circuit conditions. The output from the test valve chassis shall be connected through a short length of co-axial cable to the input Jack J1 on the main amplifier, the amplification at this point of the circuit being appropriately reduced. Since feed-back is removed when thus operating, re-calibration will be necessary with each individual valve tested using the injection socket of the test valve sub-chassis as before.

3.6. Amplifier Construction Details

The performance is critically dependent on the detailed layout of the sub-amplifier unit (Figure 3). A unit built closely to the design shown can be expected to give results in close agreement with those from the prototype, but it is recommended that a check be made with the equipment held at S.V.T.L. Haslemere.

The three basic circuits consist of:-

(a) Valve Test Circuit Unit 1. (Figure 1).
(b) Amplifier) and) Indicator) Unit 2 (Figure 2).

4. MICROPHONY TEST AMPLIFIER AND INDICATOR

This equipment consists of two main units:-

(a) Test Valve Unit.
(b) Peak to Peak Transient Voltage Indicator.

4.1. Test Valve Unit

This unit consists of a single stage with the valve to be tested connected as an amplifier. This circuit is mounted directly under the hammer unit in order to minimise lead length and also to allow easy modification of the circuit arrangement by inter-connection plugs for each valve type being tested. A suitable circuit will be given in the appropriate individual test specification.

4.2. Peak to Peak Transient Voltage Indicator

In addition to a single stage amplifier and indicator, this unit contains a small stabilised power supply feeding both the unit and the test valve unit.

The peak to peak indicator consists of a single stage Pentode amplifier coupled into a phase inverter, the outputs from which are rectified and thus generate two d.c. voltages proportional to the peak of the positive and negative half cycles respectively to the applied waveform. These outputs are added in a double cathode follower the output of which feeds direct to the meter. The circuit arrangement ensures that the meter reading remains as long as the hammer operating switch is depressed. A suitable circuit is shown in Figure 5.

FIG.1 VALVE TEST CIRCUIT

(BASIC ARRANGEMENT FOR PENTODE)

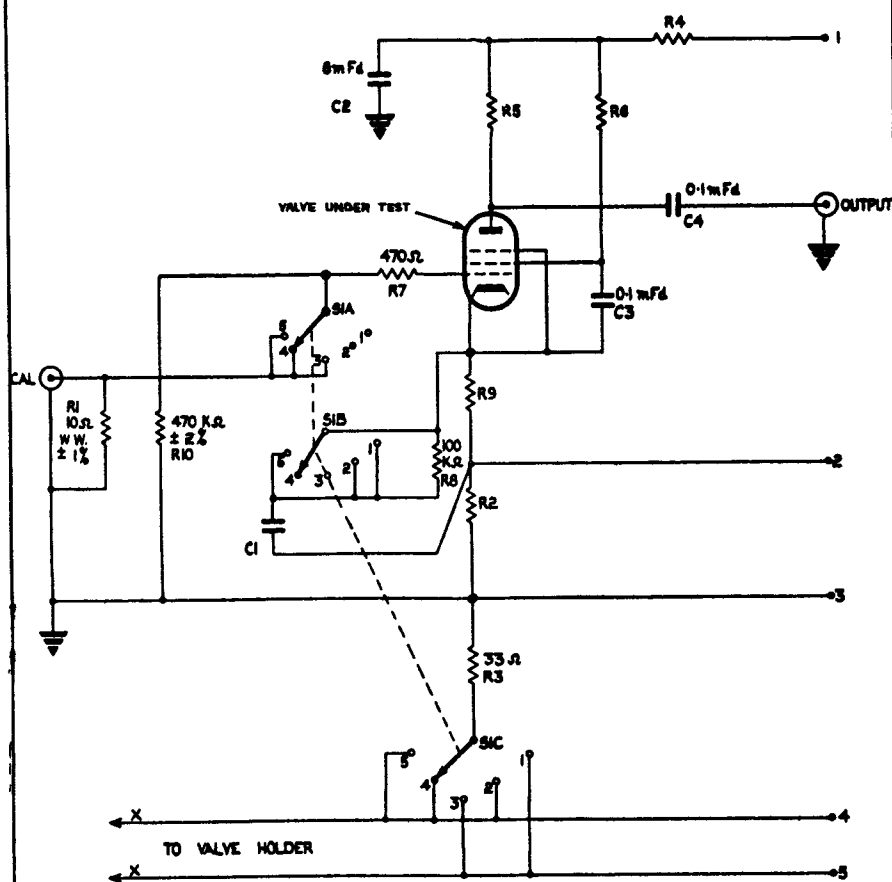

Positions 1 & 2 Grid Hum

Positions 3 & 4 Cathode Hum

R2 Feedback Res. W.W., ±1%
R4 H.T. Dropper Res.
R5 Anode Res. H.S. Close Tol.
R6 Screen Res., H.S. Close Tol.
R9 Cathode Bias Res., H.S. Close Tol.

Position 5 Hiss

The value of these resistors depends on the type of valve being tested.

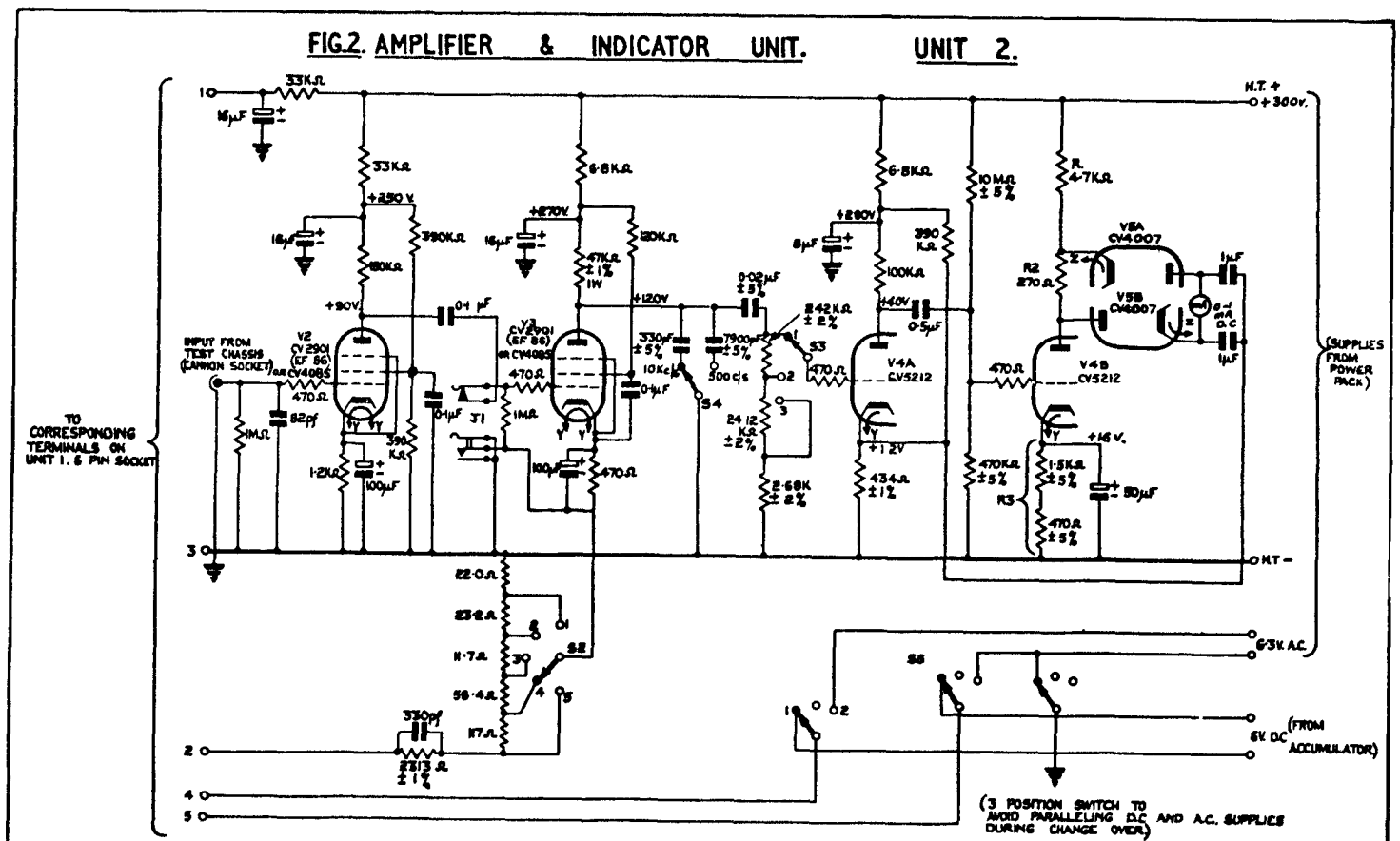
FIG.2. AMPLIFIER & INDICATOR UNIT. UNIT 2.
TO CORRESPONDING TERMINALS ON UNIT 1. 6 PIN SOCKET
INPUT FROM TEST CHASSIS (CANNON SOCKET)
V2 CV2901 (EF 86) OR CV4085
V3 CV2901 (EF 86) OR CV4085
V4A CV5212
V4B CV5212
V5A CV4007
V5B CV4007
H.T. + +300v.
H.T. -
(SUPPLIES FROM POWER PACK)
6·3v. A.C.
6v. D.C. (FROM ACCUMULATOR)
(3 POSITION SWITCH TO AVOID PARALLELING D.C. AND A.C. SUPPLIES DURING CHANGE OVER)
+290V
+270V
+250 V.
+120V
+90V
+12V
+16 V.
33K.Ω.
16μF
33K.Ω.
180K.Ω.
390K.Ω.
16μF
6·8K.Ω.
47K.Ω. ±1% 1W
120K.Ω.
16μF
8μF
6·8K.Ω.
390 K.Ω.
100K.Ω.
10 MΩ ±5%
R1 4·7K.Ω.
R2 270Ω.
R3
1μF
1μF
0·1 mA D.C.
0·5μF
0·02μF ±5%
8·42 K.Ω. ±2%
7900pF ±5%
500 c/s
24·12 K.Ω. ±2%
2·68K ±2%
434Ω. ±1%
470Ω.
470Ω.
470Ω.
470Ω.
470Ω.
470K.Ω. ±5%
1·5K.Ω. ±5%
470Ω. ±5%
50μF
0·1μF
330pF ±5%
10K.Ω.
0·1μF
1MΩ.
100μF
1·21K.Ω.
390 K.Ω.
82pf
1MΩ.
0·1μF
0·01 μF
22·0Ω.
23·2Ω.
11·7Ω.
56·4Ω.
17Ω.
330pf
2213Ω. ±1%
S1
S2
S3
S4
S5
S6

FIG. 3. WIRING & COMPONENT LAYOUT OF UNIT I.

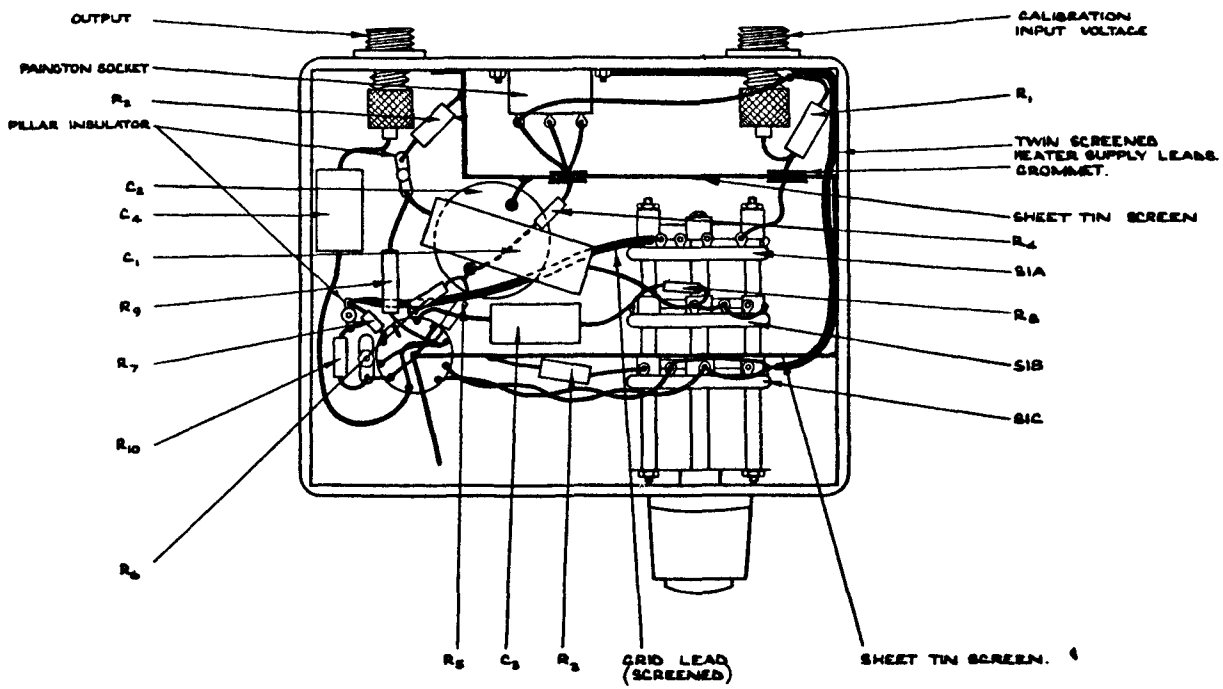

AMPLIFIER FREQUENCY RESPONSE

FIG. 4.

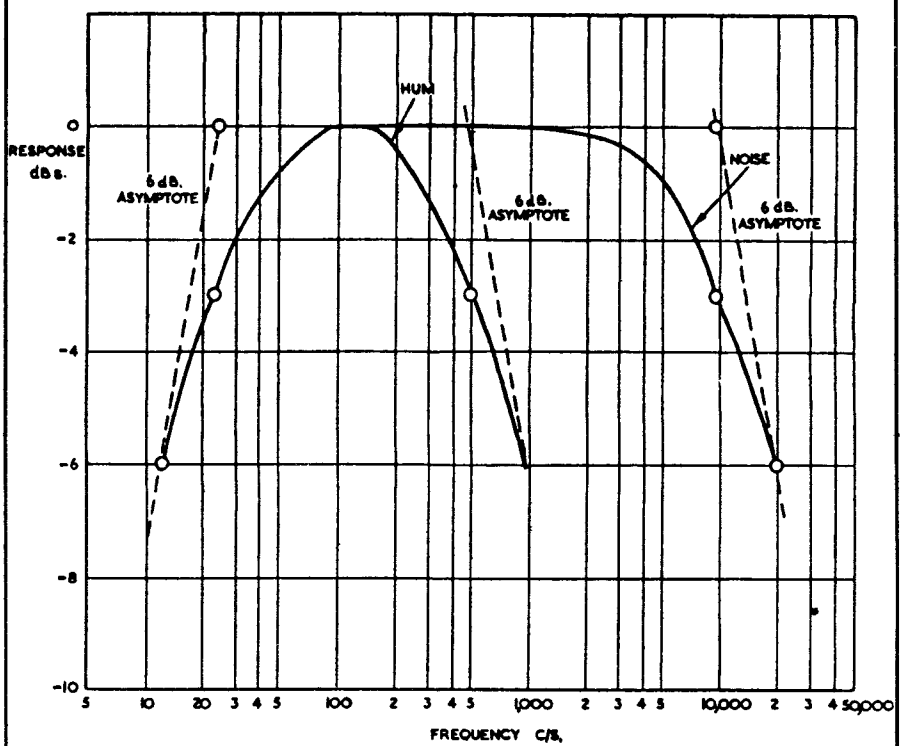

FIG. 5 PEAK TO PEAK TRANSIENT VOLTAGE INDICATOR

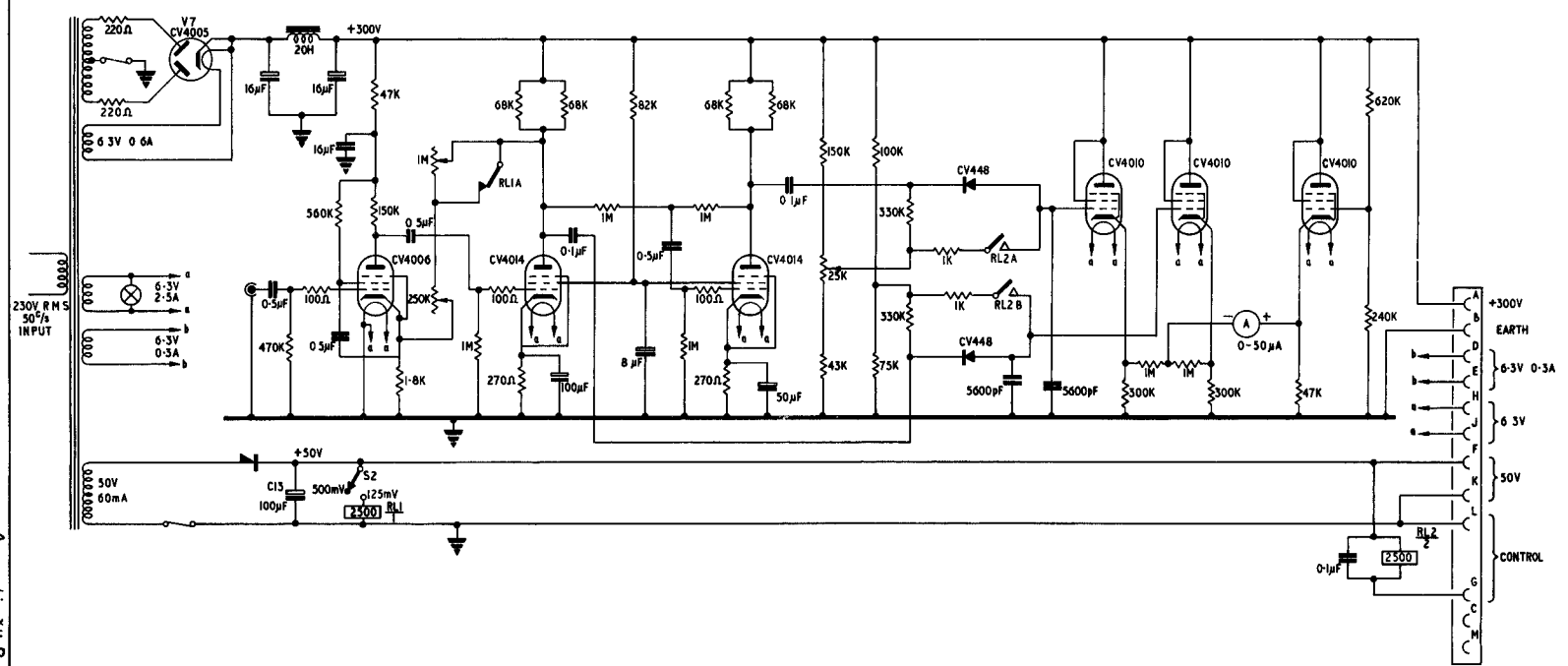

APPENDIX XIII

MEASUREMENT OF NOISE FACTOR

1. Definition of Noise Factor.

The noise factor F of an amplifier is defined numerically by the expression:

$$F = \frac{S_1/n_1}{S_2/n_2}$$

where S_1/n_1 is the available signal-to-noise power ratio at the amplifier input and S_2/n_2 is the available signal-to-noise power ratio at the amplifier output when the temperature of the source is standard i.e. 290°K.

The "term available" power implies the maximum power which can be obtained from a source.

The noise factor may also be expressed in decibel notation as:

$$F = 10 \log_{10} \frac{S_1/n_1}{S_2/n_2}$$

In present usage, noise factor, and noise figure are synonymous.

Noise Temperature T_F in degrees Kelvin and Noise Factor F are related by the expression:

$$T_F = (F - 1)\ 290$$

2. General

Unless otherwise specified, noise measurements are to be made by the dispersed signal source method. The source is usually a temperature limited diode. This noise source is satisfactory up to the frequency at which transit time and lead inductance effects become significant; with present diodes this is in the region of some hundreds of Mc/s. For higher frequencies, noise discharge tubes may be used. The specification will state the type of source to be used.

A general outline of the test equipment is shown in block diagram form in fig. 1.

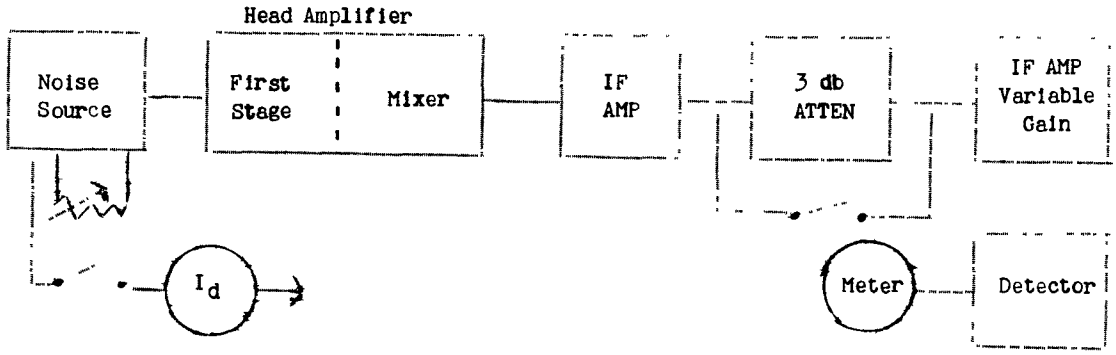

Fig. 1.

The valve to be measured for noise factor comprises the first stage of a receiving system which will be specified.

The overall noise factor of the system is given by:

$$F = F_1 + \frac{F_2 - 1}{G_1} + \frac{F_3 - 1}{G_1 G_2} + \text{-----} \frac{F_r - 1}{G_1 . G_2 . \text{------}\ G_{(r-1)}}$$

Where F_r = the numerical value of the noise factor of the rth stage when fed from a source impedance equal to the output impedance of the $(r - 1)^{th}$ stage

$G_{(r-1)}$ = the numerical value of the available power gain of the $(r - 1)^{th}$ stage.

Usually the gain of the first stage is made sufficiently high so that the noise arising from succeeding stages will be negligible. In addition the bandwidth of the first stage must be wider than that of all the following stages.

For certain systems, where this condition cannot be obtained it is usual to measure the overall noise factor of the system. In these cases, if it is desired to measure the noise factor of the valve itself, it is necessary to measure the gain G_1 of the first stage and the noise factor F_2 of the second stage and make corrections in accordance with the above equation.

The specification will state:

(a) the input coupling conditions and whether these conditions shall be adjusted for optimum power match or for optimum noise factor

(b) the frequency of measurement

(c) the bandwidth of the system

(d) the gain of the first stage when this is required to be specified.

3. Methods of Measurement.

The noise factor may be measured, when specified, by one of the methods described in the following paragraphs.

The measurement is made by comparing the noise output of the first stage of a receiving system with an equal amount of noise produced by the noise source i.e. the input to the receiver from the noise source is adjusted until it exactly doubles the noise output of the first stage. This is achieved by the use of an amplifier, detector and output indicating meter.

Either the law of the detector must be known so that an accurate doubling of noise input power can be obtained or, alternatively, some device must be used to eliminate the effect of this law.

In the methods described below, this has been done by the use of a calibrated attenuator, in method A and by the use of two similar noise sources and an output meter shunt in method B.

If a saturated noise diode is used as the noise source and the diode anode current is measured, the noise factor F of the system is calculated from the formula:

$$F = \frac{e}{2\,KT}\, I_d R$$

where e = electron charge (1.60×10^{-19} coulomb)

k = Boltzmann's constant (1.38×10^{-23} joule per degree)

T = temperature of the source resistor in ^{o}K

I_d = anode current of the noise diode in amperes

R = value of the source resistor in ohms.

For a source resistor temperature of $290^{o}K$, this formula reduces to:

(1) numerically, $F = 20\ I_d R$

(2) in db notation, $F = 10 \log_{10} (20\ I_d R)$

3.1 Method A

This method is shown in fig. 1. It uses a passive power halving attenuator as early in the system as is practicable where the signal level is small enough to avoid any errors due to circuit nonlinearities. Such an attenuator can be calibrated by standard methods external to the circuit. The attenuator must not affect the frequency response of the system and must be correctly matched into the amplifier.

The output indicating meter is required to indicate a standard reference reading at some arbitrary power level.

With the noise diode switched off, the output meter is set to the standard reference reading by adjustment of the gain of its auxiliary amplifier. The diode is then switched on and the attenuator is switched into circuit. The diode anode current is adjusted by control of the diode filament supply until the output meter is again set to the same mark. The noise factor is then calculated from the above formula.

3.2 Method B

This method is shown in fig. 2 and uses a calibrating unit and an output meter shunt. The calibrating unit consists of two saturated diodes, each with its own amplifying system with outputs connected to a common output. The noise outputs of the diodes must be considerably greater than the noise outputs of the amplifiers so that the latter have no effect on the calibration.

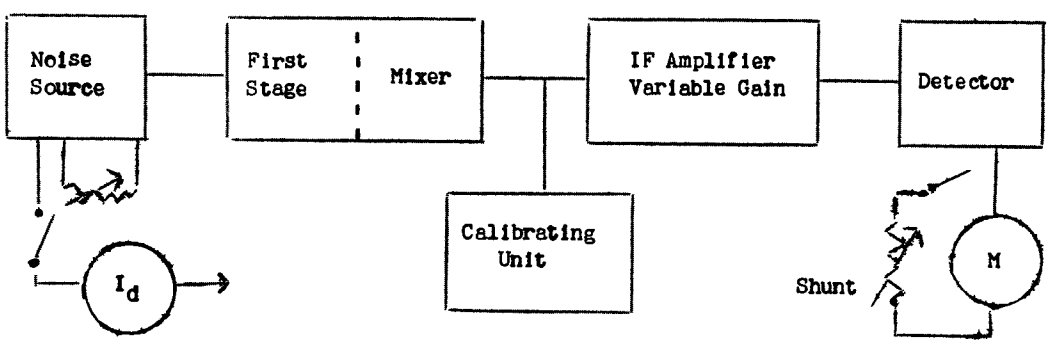

Fig. 2

With a typical valve in the test position, the gain of the receiver system is adjusted to give a suitable reading on the output meter. This reading becomes the standard reference reading.

3.2.1 Receiver calibration

The receiver is calibrated by feeding the calibrator unit into the IF amplifier with one of the calibrating noise sources operating and the gain of its associated amplifier is adjusted until the reading on the output meter is equal to the standard reference reading obtained with the valve under test. With the second calibrating noise source switched into circuit in place of the first, its associated amplifier is also adjusted to give the same standard reference reading. This results in the equalisation of the two calibration noise sources.

Both noise sources are then switched on together doubling the noise input to the receiver. The shunt across the output meter is adjusted until the deflection is exactly equal to the standard reference reading.

The receiver and shunt are now calibrated.

3.2.2 Valve test

The Calibrator unit is removed and the valve to be tested is connected into circuit and the meter shunt removed. The gain of the IF amplifier is adjusted to give the standard reference reading on the output meter. With the noise source switched on and the meter shunt connected in circuit, the noise source is adjusted to give the standard reference reading on the output meter. The anode current of the noise diode is measured and the noise factor of the amplifier calculated.

3.3 Precautions for Methods A and B

1. It is essential to stabilise both the noise diode anode voltage and filament voltage supplies against mains voltage fluctuations, and to take adequate precautions to eliminate, by suitable filtering, any radio frequency signals which may be present on the outputs from these supplies.

2. It is usually advisable to provide a well screened enclosure or room, for the measuring equipment and the operator, and to provide adequate radio frequency filtering for the mains power supply, where they enter the screened enclosure or room.

3. For absolute measurement it is essential to maintain the temperature of Noise Source Resistance at 290°K or to make correction for any difference from this temperature. Arrangements should be made to maintain the test amplifier at a constant temperature which should be recorded.

4. The noise generator must be designed to have an output impedance equal to that of the source used with the circuit under test.

The value of source resistance must be accurately known. This source resistance consists of a resistor shunted by a tuned circuit, the effect of which may not always be negligible. Therefore, it is necessary for absolute measurements, to be able to ascertain the dynamic impedance represented by this tuned circuit and thus calculate the resultant value of source resistance which will be the true value for noise factor measurements.

Frequent checks of the value of the source resistor should be made to eliminate errors due to its value altering with time due to resistor ageing, etc.

It is essential to provide the best possible coupling between the noise source resistor and the input terminals of the test amplifier to obtain minimum noise factor. This coupling is not necessarily the same as that for the best impedance match.

The actual noise factor of the tube or valve will be somewhat lower than the measured value due to various losses, such as those occurring in the matching transformer, etc.

5. It is essential to measure the noise diode anode current with the best possible accuracy and to make frequent checks of the accuracy against some standard.

3.4 Method C

The use of gas discharge noise sources at frequencies above several hundred megacycles - to be included.

APPENDIX XIV

MODULATOR DESIGN AND RATE OF RISE OF VOLTAGE IN MAGNETRON TESTING

1. THE MEASUREMENT OF RATE OF RISE OF VOLTAGE

The most convenient method of measurement of the instantaneous value of the rate of rise of voltage (as required by section 5.F.2.5.5.) is by means of a differentiating circuit, the amplitude of the output being measured on a cathode ray tube using a calibrated shift voltage. This avoids errors due to X-Y coupling and other defects in the C.R.T., the need for a linear time base with accurate time calibration, and the difficulty of accurate measurement of the slope of the resulting trace.

The most convenient type of differentiator is the CR circuit (Fig.1)

The type of waveform obtained is shown in Fig.2.

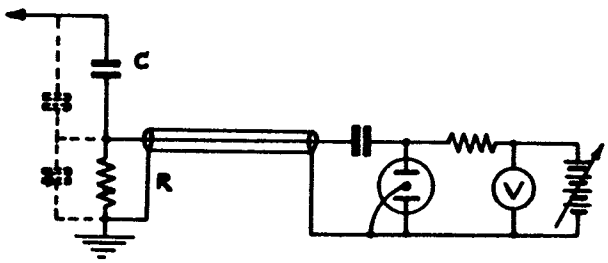

FIG. 1

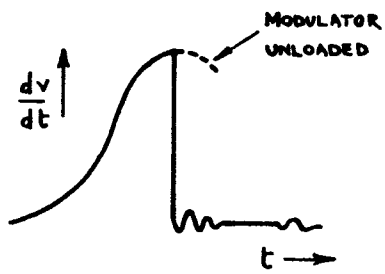

FIG. 2

Errors can arise due to the inductance of the resistor, stray capacitance across the resistor or the capacitor, and reflections in the cable (if any) connecting the C.R. circuit to the C.R.T.

Grade I Carbon Resistors Pattern CT3 of RCL 112 have been found suitable; the lowest wattage permitted by the conditions should be used. Errors due to the cable can be minimised by making R equal to the characteristic impedance of the cable.

It is an advantage to use a vacuum or oil-filled capacitor because the reduced bulk thus obtainable enables the stray capacitance across the resistor to be minimised.

The time constant of the stray capacitance with the resistor should not exceed about one tenth of the rise time of the pulse.

The differentiating capacitor should be screened to limit shunting stray capacitance from other conductors forming part of the high voltage circuit of the modulator.

The change in the rate of rise of the modulator due to connection or removal of the differentiator must be taken into account.

2. CORRELATION OF THE INSTANTANEOUS RATE OF RISE OF VOLTAGE WITH THE INSTANTANEOUS VOLTAGE.

To determine the instantaneous rate of rise at a particular voltage (as required by section 5.F.2.5.5) it is convenient to connect the output of the differentiator to one pair of plates of a C.R.T., with the voltage reduced with a potential divider, to the other pair. The type of trace is shown in figure 3.

FIG. 3

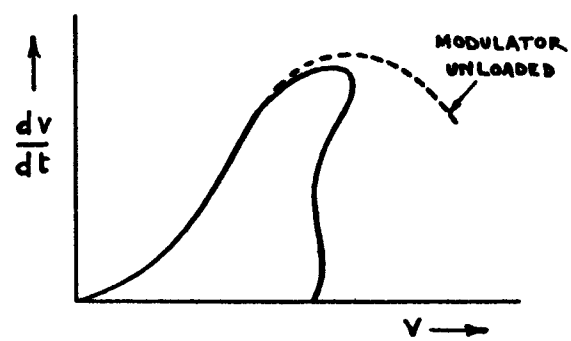

The measurements should be made using calibrated shift voltages.

The potential divider is required to pass the leading edge of the pulse without distortion; a capacitance divider with a suitably short connecting cable is indicated.

The total delay times of the X and Y paths must be made equal to a suitable degree allowing, in the case of very short rise times, for the transit time of the C.R.T.

3. THE DESIGN OF TEST MODULATORS HAVING DESIRED CHARACTERISTICS IN RESPECT OF RATE OF RISE OF VOLTAGE.

In network type modulators, the value of the rate of rise can be controlled by varying either the inductance in series with the discharge circuit or the capacitance shunted across the load. When it is permissible to neglect the effect of strays other than those which can be included in the total series inductance and the total shunt capacitance of the circuit so that the circuit becomes as shown in Fig. 4, the shape of the rate of rise/voltage characteristic is a function of $\sqrt{\frac{L}{C}} / Z_0$ as shown in Fig.5.

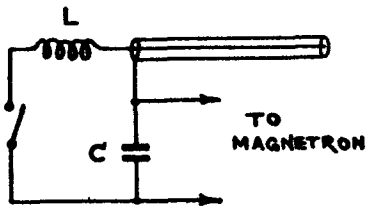

FIG. 4

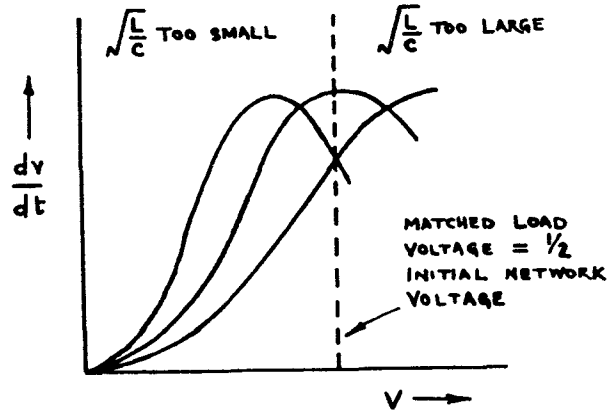

FIG. 5

The rate of rise/voltage trace may depart from the shapes shown in Fig.5 due to the effect of strays which have been neglected. In particular, excessive capacitances of the pulse forming networth to earth, together with too high a ratio $\frac{L_2}{L_1 + L_2}$ (Fig.6) can give rise to a superimposed oscillation, (Fig.7).

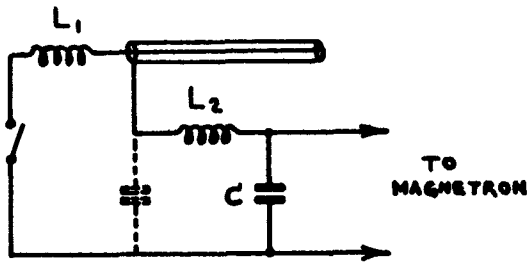

FIG. 6

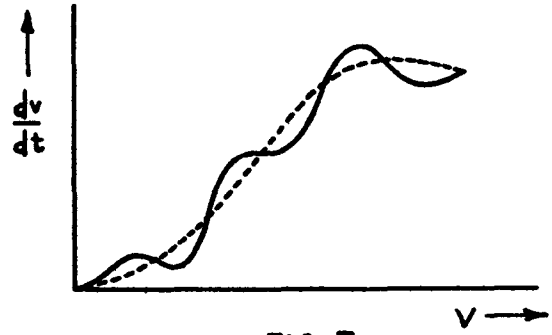

FIG. 7

Fig. 6

Fig.7

Similar effects can arise from excessive distributed capacitance to earth of the pulse-transformer windings or excessive strays at other points in the circuit.

JOINT SERVICE SPECIFICATION K1001

APPENDIX XV

CATHODE RAY TUBES:-

ENVELOPE FACE PLATE AND SCREEN QUALITY

1. SCOPE This Appendix describes defects which may be present in individual tubes.

2. GENERAL INSTRUCTIONS

Inspection is to be made with the unaided eye unless magnification is specified.

3. DEFINITIONS OF GENERAL DEFECTS

3.1 General

Blister - A bubble in the glass due to the inclusion of air having a maximum dimension in excess of that specified in paragraph 5.2 of this Appendix.

Bruise - Crushed or cracked surface, spot or area on glass resulting from an impact with another object.

Bubble - See Blister.

Bulls Eye Top - A thickening of the glass in the centre of the top of a bulb resulting in optical distortion.

Check or Crack - A fissure extending into or through the glass.

Chill Wrinkle - Rippled or wavy surface caused by non-uniform glass flow in the pressing operation.

Cluster - Two or more stones or knots when the minimum separation is not greater than 1/16 inch.

Cord - An attenuated transparent inclusion possessing optical or other properties differing from the parent glass.

Glass Knot - A small transparent area of incompletely assimilated glass having an irregular, knotty or tangled appearance; a transparent stone. The "size" of a knot refers to the maximum linear dimension in its most distinct contour. A "cluster" of knots is a group of two or more knots that are speced not more than 1/16 inch apart. A cluster is considered as one knot. The size of a cluster shall be considered as the maximum overall dimension of the group.

Lap - A fold in the surface of the glass.

Loading Mark - Imperfections in the outer surface glass of a bulb caused by lehr stands, pokers, etc.

Plunger Pull - See Suck Up.

Rouge or Rust - See Scale.

Run Down - This is caused by plastic glass running down into the dome of a blown bulb after release from the mould.

Scale - A small piece of metallic oxide or carbon embedded in the glass. Not to be confused with allowable slight blackening of seal area caused by reduced lead in the glass.

Scuff - Small scratches or abrasions in the surface of the glass.

Shear Mark - A scar in the glass caused by cutting with shears.

Stone - An opaque or white spot caused by undissolved or foreign material.

Suck Up - or Plunger Pull - A distortion or deviation from the intended shape, caused by the plastic glass following the plunger as it is withdrawn from the mould.

3.2. Screen and Face Plate Defects

Definitions

Bright spot - A small area or point source of light on the tube screen with an intensity (fluorescent or phosphorescent) at least twice the brightness of the surrounding area.

Colour - Unless otherwise stated, this refers to the colour observed with the screen activated as specified in paragraph 4.1 of this Appendix.

Colour Spot - A small area which is noticeably dis-coloured and which has fluorescent or phosphorescent intensity less than one-half or greater than one and one half times that of the surrounding area.

Combination Spots - Spots which appear to have combinations of the characteristics of dead, bright and colour spots shall be classified as the type they most resemble.

Dead Spot - A small area which emits practically no light. For example, holes and non-fluorescent or non-phosphorescent spots in the screen and opaque particles, open blisters and bruises in the face-plate glass.

Face Contour Variation - Variation in the inside or outside face surface contour, such as Bulls Eye Top or Suck Up.

Quality Area - The area specified as the minimum useful screen area.

Shaded or Mottled Areas - Minor gradation in colour or luminous intensity with respect to the overall screen background, such as may be caused by uneven screen distribution, water marks, loading marks or scum.

Surface Blemish - Inside or Outside surface defects such as Spot, Chill Wrinkle and Cord.

4. CLASSIFICATION OF GLASS DEFECTS

All face-plate defects shall be classified into one or the following groups:-

Dead Spot - Blister (except that clear buried or unbroken surface blisters which meet the requirements of paragraph 4.5 of this Appendix shall not be considered as defects), Bruise, Check, Scale.

Shaded or Mottled Area - Scum (de-vitrification) or Shear Mark.

Face Contour Variation - Bulls Eye Top, Chill Wrinkle (flow line), Loading Mark, Suck Up or Plunger Pull, Run Down.

Surface Blemish - Cord, Lap (inside surface).

Colour Spot - Bright spot or other colour spot.

NOTE: The criteria for Acceptance and Rejection will be published later.

JOINT SERVICE SPECIFICATION K1001

APPENDIX XVII

WITHDRAWAL OF QUALIFICATION APPROVAL AS A REQUIREMENT FOR SOME CV VALVES

1. Qualification Approval is deleted as a requirement for the valves listed below.

Never-the-less it is open to any Qualification Approval Authority to reinstate the requirement and to any firm to seek Qualification Approval in particular cases.

2. Marking

If any valves listed below, are supplied by a manufacturer who holds a valid Qualification or Type Approval Certificate the marking of K1001/4.1 should be used. Otherwise K1001/4.2.3 applies (that is, 4.1 excluding the Type Approval letter).

3. Type Approval Tests

Some of the specifications of the valves listed below contain tests which are quoted as Type Approval only. These tests are to be performed once only at the beginning of any contract at Inspection Level 1A and AQL.6.5 or as agreed with the Inspection Authority.

CV 6
8
9
12
13
15
16
18
19
20
22
24 - 27 inclusive
29 - 31 "
33
34
36 - 57 "
59 - 72 "
74 - 94 "
96 - 116 "
118 - 121 "
124 - 128 "
130 - 140 "
151 - 161 "
171 - 182 "
185 - 186 "
188 - 213 "
CV 215 - 216 inclusive
218 - 220 "
221 - 227 "
230 - 242 "
246 - 251 "
255 - 257 "
259 - 260 "
264
266 - 272 "
274
278 - 288 "
290
292
294 - 298 "
300 - 306 "
308
310
312
315 - 319 "
321 - 322 "
324 - 325 "
327 - 336 "
338 - 344 "
346 - 347 "
349 - 353 "
355 - 357 "

APPENDIX XVII

WITHDRAWAL OF QUALIFICATION APPROVAL AS A REQUIREMENT FOR SOME CV VALVES

1. Qualification Approval is deleted as a requirement for the valves listed below.

Never-the-less it is open to any Qualification Approval Authority to reinstate the requirement and to any firm to seek Qualification Approval in particular cases.

2. Marking

If any valves listed below, are supplied by a manufacturer who holds a valid Qualification or Type Approval Certificate the marking of K1001/4.1 should be used. Otherwise K1001/4.2.3 appl (that is, 4.1 excluding the Type Approval letter).

3. Type Approval Tests

Some of the specifications of the valves listed below contain tests which are quoted as Type Approval only. These tests are to be performed once only at the beginning of any contract a Inspection Leval 1A and AQL.6.5 or as agreed with the Inspection Authority.

CV 6
8
9
12
13
15
16
18
19
20
22
24 - 27 inclusive
29 - 31 "
33
34
36 - 57 "
59 - 72 "
74 - 94 "
96 - 116 "
118 - 121 "
124 - 128 "
130 - 140 "
151 - 161 "
171 - 182 "
185 - 186 "
188 - 213 "

CV 215 - 216 inclusive
218 - 220 "
221 - 227 "
230 - 242 "
246 - 251 "
255 - 257 "
259 - 260 "
264
266 - 272 "
274
278 - 288 "
290
292
294 - 298 "
300 - 306 "
308
310
312
315 - 319 "
321 - 322 "
324 - 325 "
327 - 336 "
338 - 344 "
346 - 347 "
349 - 353 "
355 - 357 "

CV 1251 - 1296 inclusive
1300 - 1346 "
1348 - 1349 "
1355 - 1356 "
1359
1363
1366 - 1374
1377
1379 - 1399
1400
1409 - 1410
1432
1472 - 1473
1487 - 1503 inclusive
1505 - 1506
1508
1510 - 1511
1514 - 1529 inclusive
1531 - 1534 "
1536
1540
1546 - 1599
1636 - 1733
1736
1738
1743
1758
1762
1790
1795
1832 - 1833
1856
1861
1862
1863

CV 1871 - 1872
1874 - 1875
1877
1879 - 1880
1883
1891
1893
1900
1911
1932
1934 - 1935
1937
1941
1943
1944
1947
1955
1959
1971
1985
1988
2101 - 2104 inclusive
2106 - 2108
2110
2124
2125
2127 - 2129 inclusive
2132 - 2137 "
2164
2172
2174
2184
2186
2192

CV 2208
2210
2212
2214
2215
2217
2218
2224
2225
2228
2238
2240
2241
2243
2254
2259
2270
2273
2280
2282
2286
2288
2300
2301
2319
2320
2322 - 2324
2331
2342
2343
2360
2361
2370
2377
2390
2399
2411
2416
2419
2447
2524
2742
2747
2748
2785
2791
2795
2810
2851
2868
2902
2983
3798

APPENDIX XVIII

MEASUREMENT OF VALVE CATHODE INTERFACE RESISTANCE

GENERAL

This Appendix describes a convenient low frequency method of measuring thermionic valve cathode interface resistance.

Section 1. THEORETICAL ANALYSIS

1.1. The measuring method outlined below gives a simple means of measuring the total effective resistance occurring in the cathode coating and cathode interface layer of triodes and pentodes.

1.2. Referring to Fig. 1, fundamentally the assumption is made that at constant grid current V_{g-k} is constant, so that a variation in cathode current δI_k produces a variation in cathode surface potential $\delta I_a \times r_{kt}$. Since at constant grid current V_{g-k} is constant, then

$$\delta I_k \times r_{kt} = \delta V_{g-e}$$

$$\therefore \quad r_{kt} = \frac{\delta V_{g-e}}{\delta I_k}$$

i.e, r_{kt} (the total coating and interface resistance) is equal to the slope of the V_g: I_k characteristic at constant grid current.

A more strict mathematical analysis of the system leads to the equation

$$\frac{\delta V_{g-e}}{\delta I_k} = r_{kt} + \frac{1}{1 + \mu'/\mu} \cdot \frac{1}{g_m}$$

where $\mu = \frac{\delta V_{a-k}}{\delta V_{g-k}}$, I_a being constant

and $\mu' = \frac{\delta V_{a-k}}{\delta V_{g-k}}$, I_g being constant

and $g_m = \frac{\delta I_k}{\delta V_{g-k}}$

As the valve is connected as a tricde, and as the grid current is maintained at a constant value, then $\delta I_k = \delta I_a$ and the expression becomes:

$$\frac{\delta V_{g-e}}{\delta I_a} = r_{kt} + \frac{1}{1 + \mu'/\mu} \cdot \frac{1}{g_m}$$

The error caused by the second term in the above expression is usually not greater than about 10 ohms, and if new valves can be assumed to have very low values of r_{kt}, the correction can be determined by measurement.

For the purpose of investigating changes in interface occurring during life, the correction can be ignored if this second term stays constant.

Section 2. PRACTICAL METHODS OF MEASURING INTERFACE RESISTANCE

2.1. A practical circuit for performing the measurements described in Section 1 above is given in Fig. 2.

2.2. The grid is returned through a 0.5 MΩ resistor to a variable positive voltage and the grid current is conveniently set to about 0.4mA. Since 0.5 MΩ is large compared with the grid-cathode diode-impedance, the grid current is held closely constant and the grid follows the cathode surface potential. The $I_a = I_k$ is adjusted by the V_a control to nominal and the anode voltage is modulated by the low impedance 0-10-50 v transformer in the anode lead. The modulation is increased to give a reading of 100 mV across the 100Ω resistor. If the valve voltmeter is switched into the grid circuit, δV_g will be indicated for a pre-set value of δI_a. The grid reading is therefore $\frac{K \delta V_g}{\delta I_a}$ where K is a constant calibration.

The instrument may be made direct reading in ohms.

By inserting a decade box in the cathode, the performance of the apparatus may be checked. With a new valve inserted and zero resistance inserted, a value of resistance is read. This has been found to be closely constant for all new valves of the same type measured at the same values of I_g and I_a.

This is termed the zero error and is subtracted from all subsequent measurements, the I_a and I_g always being the same.

2.3. The limitation of the method is that no indication is obtained of the capacitive component of interface, and no distinction can be drawn between true interface and the actual resistance of the cathode coating.

THEORETICAL CIRCUIT

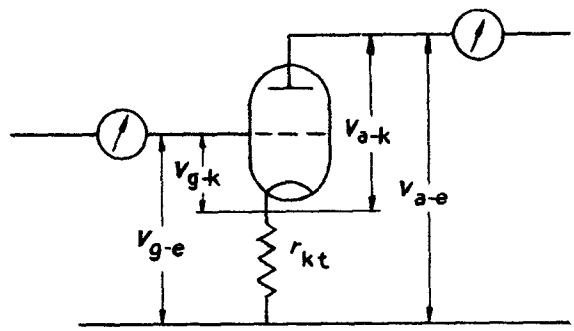

FIG. 1

PRACTICAL CIRCUIT
FOR MEASURING CATHODE INTERFACE RESISTANCE

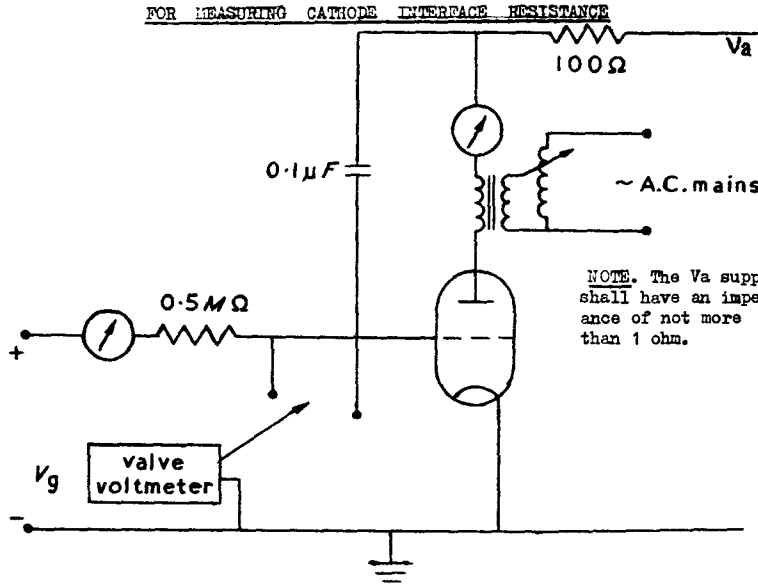

NOTE. The Va supply shall have an impedance of not more than 1 ohm.

FIG. 2

(222327)

JOINT SERVICE SPECIFICATION K.1001

APPENDIX XIX

INSPECTION PROCEDURE FOR GOLD PLATED PINS AND ACCESSORIES

When specified in the individual specification the following procedure shall apply:-

1. Samples, which may be electrical rejects from the lot under inspection, shall be subjected to the Climatic Tests specified in Section 10.

2. At the conclusion of the climatic cyclying the plated surfaces shall be examined and shall not show any evidence of corrosion or peeling, such as could cause unsatisfactory operation of equipment in which the valve may be used.

3. Unless otherwise specified an Inspection Level of IA and A.Q.L. of 0.65% shall apply. /The Inspection Level shall refer to the number of sample valves, and the Acceptance Number, (as a result of the above A.Q.L.) shall indicate the number of individual item rejections allowed e.g. pins/.

JOINT SERVICE SPECIFICATION K1001

APPENDIX XX

CODE OF PRACTICE RELATING TO JOINT SERVICE RADIOACTIVE VALVES
(Superseding T.V.C. Information Sheet No. 11)

Contents:

1. Explanatory Notes.

2. General Provisions Relating to Radioactive Valves for Joint Service Use.

3. Class 1 Valves. Procedures and Precautions for dealing with Radioactive Valves (Class 1) for Joint Service Use.

4. Class 2 Valves. Procedures and Precautions for dealing with Radioactive Valves (Class 2) for Joint Service Use.

5. Hazard Grade Valves. Procedures and Precautions for dealing with Radioactive Valves (Hazard Grade) for Joint Service Use.

Page 14 Illustrations of Marking Requirements for each Class of Radioactive Valve.

Annexe 1 Procedure for dealing with broken Class 2 Radioactive Valves.
ANNEXE 2 LIST OF UK MANUFACTURED TRI-SERVICE VALVES WHICH MAY BE RADIOACTIVE.
ANNEXE 3 LIST OF AMERICAN MANUFACTURED BRITISH JOINT SERVICE RADIOACTIVE VALVES SHOWING BRITISH CV NUMBERS AND AMERICAN TUBE TYPES.

1. Explanatory Notes

1.1 Introduction

This Code of Practice is designed as a guide to all concerned with Joint Service Radioactive Valves. The currently accepted view is that no quantity of radioactive material however small ought to be ignored: it is always possible that there will be circumstances in which its presence will be of some importance, even though these circumstances seldom arise.

In order to ensure the greatest practicable convenience to users, this Code divides Joint Service Radioactive Valves into three grades or classes:

(a) Class 1, which are subject to so few restrictions that for almost all purposes the presence of radioactive material may be disregarded.

(b) Class 2, which are subject to comparatively few restrictions, especially individual valves.

(c) Hazard Grade, which are subject to many restrictions which will inevitably embarrass the user.

It is expected that nearly all Service Valves will fall within Class 1.

An important feature is the need to be able to identify each grade of valve by its markings. This calls for correct action both in drawing up the specification and in manufacture. Mistakes made in these stages cannot easily be rectified.

1.2 The Radioactive Valve Problem

1.2.1 The hazard presented by radioactive material in valves depends not only upon its nature but upon many other factors including:

(a) the quantity in a valve.

(b) whether the valve is whole or has been broken.

(c) the degree of handling by personnel.

(d) the number of valves in one place.

The quantity of radioactive material in a single valve is usually very small and there seems no technical reason why it should ever become large. It is therefore misleading to speak of a radioactive valve as dangerous; but on the other hand, precautions are necessary where people continually handle valves or when valves get broken or when many valves are collected in one place. By imposing restrictions on the quantity and range of radioactive materials introduced into valves and by paying proper attention to marking and labelling, the general need for precautions can be reduced to a minimum. The Code of Practice follows this course and is governed very largely by the requirements of the various Regulations discussed below.

1.2.2 The Radioactive Substances Act 1960 (Ministry of Housing and Local Government)

The main purpose of this Act is to control the disposal of radioactive waste. To do this the Act requires that any person who keeps and uses radioactive material (as defined in the Act) is to be registered in respect of his premises by the Minister of Housing and Local Government and that no person shall accumulate or dispose of radioactive waste except in accordance with an authorisation granted by the Ministry. The Act does not apply to Crown premises but comparable controls to those exercised under the Act are extended to them by administrative means.

There are a number of Exemption Orders which have been made under the Act. These orders exempt the keeping and use of specified materials (usually of low activity) from registration, and exempt the accumulation and disposal of specified wastes from authorisation, either conditionally or unconditionally. Among them is the Electronic Valves Exemption Order which grants exemption from rwgistration for the keeping and use of most types of electronic valves. In some cases the exemption is unconditional; in others the exemption is granted subject to conditions which are specified in the Order. The Order also grants exemption from the authorisation requirements for the disposal of waste valves. The Order does not apply to premises used in connection with the manufacture or storage of valves by the manufacturer.

1.2.3 Regulation for the Safe Transport of Radioactive Materials

These Regulations of the International Atomic Energy Agency, to which all the principal nations belong, cover all forms of transport and will form the basis for all national Regulations. Whatever the situation at the moment, we can be confident that in the reasonably near future, the regulations of all transport undertakings of all countries will be framed so as to comply with (or at least not to conflict with) these Regulations. These Regulations provide conditional exemption for electronic valves containing specified radioactive materials below specified limits.

1.2.4 The Factories Act 1961 (Ministry of Labour)

Under this Act, a Statutory Instrument, the Ionising Radiations (Sealed Sources) Regulations 1961 governs work in factory premises (but not other premises). Radioactive Valves are Sealed Sources under these Regulations. However, there is conditional exemption for feeble sources.

1.3 Broad Outline of the Code of Practice

This Code of Practice is based on the assumption that the intrinsic risk can always be made small. Broadly speaking it treats valves as feeble sealed sources of relatively fragile construction. It divides them into three classes, of ascending intrinsic risk, and deals with each class separately, paying special attention to identification and labelling. The most generally convenient class is Class 1, for which precautions and procedures are at their simplest. The Code does not deal with the manufacture of radioactive valves because the hazards then involved are different from those confronting the user and do not arise mainly from the finished article.

The Code treats each of the three classes separately as regards procedures and precautions for all the following circumstances:

1 Inspection

2 Transport

3 Storage

4 Building and repair of equipment

5 Normal Service use (in apparatus and equipment)

6 Breakage

7 Fire

8 Disposal as waste

9 Disposal as surplus to requirements.

1.4 Regulations

This Code of Practice is designed to facilitate compliance with the principal Acts and Statutory Regulations dealing with radioactive materials viz.

(a) Radioactive Substances Act 1960, and its Exemption Orders.

(b) Factories Act 1961 and its Statutory Regulations.

(c) International Atomic Energy Agency Regulations for the Safe Transport of Radioactive Materials.

2. General Provisions Relating to Radioactive Valves for Joint Service Use

2.1 This Code of Practice applies in respect of every Joint Service Radioactive Valve from the moment it is offered for inspection for acceptance to the moment the Service or other Government Department concerned rids itself of the Valve.

2.2 This Code of Practice does not apply in respect of Valves in the course of manufacture, or while valves are in the manufacturer's hands, except insofar as the valve specification embodies certain provisions of the Code, namely, one or more of the following clauses:-

3.1, 3.2(a) and (b), 4.1, 4.2(a) and (b), 5.1, 5.2(a), (b) and (c).

2.3 Responsibility for ensuring compliance with the detailed terms of this Code of Practice rests with the Responsible Authority in the Establishment or Unit concerned; except that the contractor originally supplying the valve has the duty of supplying proper identification and labelling in the first place.

2.4 The Responsible Authority has the specific duty of ensuring that the proper persons under his control receive adequate information about the significance of the markings associated with the various grades of Valve.

2.5 Each Government Department concerned should have available for deployment on reasonable notice, a monitoring team able to assess the degree of contamination resulting from fire or accident involving Radioactive Valves; and able to supervise decontamination measures.

Note: In many cases such teams are already in existence for other purposes and could perform this extra function on the few occasions it would be required.

2.6 Radium shall not be incorporated into Joint Service Valves.

2.7 Class 1 valves are preferred to Class 2 valves; and Class 2 valves preferred to Hazard Grade valves. A list of approved radionuclides is included in Table 1.

2.8 Hazard Grade valves should never be specified nor their use permitted unless it can be shown that in a given case, the technical advantage clearly outweighs the numerous disadvantages.

2.9 Joint Service Radioactive Valves made prior to the date of this code which are variously identified by an orange band or the trefoil symbol or the words "Radioactive Hazard" shall be deemed to be Class 2 valves for the purposes of this Code unless it is known that their radioactive content would bring them into Hazard Grade.

2.10 When radioactive material is to be incorporated into any valve whatever, the radioactive substances and quantities must be declared by the manufacturer to the Qualification Approval Authority at the time of submitting samples for Qualification Approval. The Q.A. Authority will insert this information on the Q.A. Certificate.

In those instances where Qualification Approval is not required, e.g. where the requirement has been withdrawn or no published C.V. Specification exists, the manufacturer/supplier must inform the Ministry of Aviation, T.V.C. Office of the radioactive substances and quantities used and the Class to which each belongs.

2.11 The Qualification Approval Authority concerned will supply to other Specification and Qualification Approval Authorities, T.V.C. Office and to the Inspectorate, details of the radioactive content of valves and the Class to which each belongs.

2.12 Where a particular C.V. specification is or may be met either by a non-radioactive valve or by a radioactive valve, that C.V. specification shall be endorsed. "This Valve may be Radioactive".

3. Procedures and Precautions for dealing with Radioactive Valves (Class 1) for Joint Service Use

3.1 Definition

A Radioactive Valve (Class 1) for Joint Service Use is one into whose manufacture a small quantity of one or more of the radionuclides listed in Table 1 has deliberately been introduced, up to the maximum that will satisfy the requirements of Table 1, modified if necessary as shown in Note 1.

Table 1

Column 1	Column 2	Column 3
Radionuclide	Permitted Quantity per valve in microcuries	Permitted Radiation Dose Rate in millirads in air per hour at surface of valve averaged over any one square centimetre
Hydrogen 3 (Tritium)	150.0	0.03
Krypton 85	10.0	0.03
Carbon 14	1.0	0.03
Chlorine 36	1.0	0.03
Cobalt 60	0.1	0.03
Nickel 63	0.1	0.03
Caesium 137	0.1	0.03
Thorium (any isotope)	0.1	0.03
Thallium 204	0.1	0.03
Uranium (any isotope)	0.1	0.03

Note 1: More than one of the radionuclides listed in Table 1 may be used provided the sum of the amounts expressed as fractions of the permitted quantities in column 2 does not exceed unity.

Note 2: In practice either column 2 or column 3 may provide the limiting factor.

3.2 Identification

(a) Each Class 1 valve must be marked with the "Theta" marking illustrated in Figure 1 (page 14), as part of the normal marking requirements in Specification K1001. Provided the correct proportions are preserved, the size of the symbol may be at the manufacturer's discretion, subject to a minimum overall dimension of 0.1 inch.

(b) Similar identification must appear on the individual cartons and upon bulk packs. The "Theta" mark shall be prominent.

(c) The significance of this special marking must be made known to persons responsible for the following functions:

(i) Inspection for acceptance.

(ii) Storage in bulk.

(iii) Transport (as items not already built-in to equipment).

(iv) Disposal as waste of more than ten Class 1 valves on any one occasion.

(v) Decision as to whether surplus electronic valves can be offered for sale to the general public.

3.3 Inspection

(a) Routine inspection of Class 1 valves calls for no precautions, either personal or administrative, beyond those in use for electronic valves in general.

(b) If more than 10 such valves get broken in any one inspection bay during any one week, monitoring of the area shall be arranged to assess within three days of the last breakage, the extent of the radioactive contamination. Any subsequent necessary decontamination should be arranged.

(c) If none of the valves broken contained any radioactive material except tritium, (b) above need not be implemented.

3.4 Transport

(a) Parcels of Class 1 valves may be transported in any convenient manner and without disclosing to the carrier that there is radioactive material present, subject to the conditions specified below:

(i) The package must be strong enough to maintain its integrity under all the conditions likely to prevail during the journey, including such mishandling and minor accidents as are commonly met with in connection with transport.

(ii) No valve shall be closer than one centimetre to the outer surface of the package; nor shall valves be more closely packed than one centimetre centre to centre, except that this provision need not apply if the only radionuclide is tritium.

(iii) The package must contain only Class 1 valves and not more than 1,000.

(iv) The package shall not bear on it any indication that the contents are radioactive (the "theta" mark is held not to give such indication).

(b) Class 1 valves may be carried by road in Crown vehicle manned solely by Crown servants without regard to any of the restrictions listed in (a) above provided:

(i) The destination is a Crown Establishment

(ii) The entire journey is undertaken in the same vehicle (except in case of accident or breakdown)

(iii) The package is marked "Keep away from photographic film and X-ray film".

(iv) The driver is told in advance what to do in case of damage to his load (broadly speaking, he should salvage as much as possible).

(v) Reasonable precautions are taken against theft and fire.

3.5 Storage

Provided the store keeper is told the significance of the identification, there are no storage restrictions on Class 1 valves beyond those customary for electronic valves in general.

3.6 Building or Repair of Equipment

Class 1 valves should be treated in exactly the same way as ordinary electronic valves.

3.7 Normal Service Use (in apparatus and equipment)

Class 1 valves should be treated in exactly the same way as ordinary electronic valves.

3.8 Breakage

(a) There must be no deliberate breakage of large numbers of Class 1 valves.

(b) Suitable instructions should be issued to persons responsible for holding or disposing of stocks of Class 1 valves.

(c) Occasional accidental breakage calls for no action beyond that customary for dealing with broken electronic valves. The procedure of Appendix 1 does not apply.

3.9 Fire

(a) No special action need be taken until the fire has been extinguished. If the fire involved large numbers of Class 1 valves e.g. a fire at a storage depot, the site (having been roped off) should be monitored to determine the degree of contamination and suitable further action should be taken if necessary.

(b) If in such a case the stocks of valves are declared useless, the Ministry of Housing & Local Government should be consulted before disposal is put in hand (see 3.10 below).

3.10 Disposal as Waste

Perons who, knowing the significance of the identification mark, are faced with the problem of disposing of more than 100 Class 1 valves as waste must first seek advice from the Radiochemical Inspectorate, Ministry of Housing & Local Government (WHItehall 4300, Extn. 556). Quantities of less than this may be disposed of with other refuse destined to be collected in the ordinary way by the Local Authority.

3.11 Disposal as Surplus to Requirements

Class 1 valves must not be disposed of by sale to the public or in any other way which is likely to result in their falling into the hands of members of the public.

4. Procedures and Precautions for dealing with Radioactive Valves (Class 2) for Joint Service Use

Special Note If on any premises within the United Kingdom a stock of more than 10 Class 2 valves is held, the valves not being built-in to equipment, the Ministry of Housing & Local Government must be informed.

4.1 Definition

A Radioactive Valve (Class 2) for Joint Service Use is one into whose manufacture a small quantity of one or more of the radionuclides listed in Table 2 has deliberately been introduced, up to the maximum that will satisfy the req uirements of Table 2, modified if necessary as shown in Note 1.

Table 2

Column 1	Column 2	Column 3
Radionuclide	Permitted Quantity per Valve in microcuries	Permitted Radiation Dose Rate in millirads in air per hour at surface of valve averaged over any one square centimetre
Krypton 85	100	0.2
Carbon 14	10	0.2
Chlorine 36	10	0.2
Cobalt 60	1	0.2
Nickel 63	1	0.2
Caesium 137	1	0.2
Thorium (any isotope)	1	0.2
Thallium 204	1	0.2
Uranium (any isotope)	1	0.2

Note 1: More than one substance listed in Table 2 may be incorporated provided the sum of the amounts expressed as fractions of the permitted quantities in Column 2 does not exceed unity.

Note 2: In practice either column 2 or column 3 may provide the limiting factor.

4.2 Identification

(a) Each Class 2 valve must be marked with the trefoil symbol together with the words "Class 2". See Figure 2 (page 14).

(b) Similar identification must appear on individual cartons and upon bulk packs containing a number of such valves. The trefoil symbol shall be black on a yellow background, generally in accord with BS 3510, Fig. 1 with the word "Class 2" and nothing else.

(c) The significance of the markings must be made known to persons responsible for the following functions:

(i) Inspection for acceptance.

(ii) Storage in bulk.

(iii) Transport of valves not already built-in to equipment.

(iv) Disposal as waste of any Class 2 valve on any occasion.

(v) Decision as to whether surplus electronic valves can be offered for sale to general public.

4.3 Inspection

(a) Inspectors should not spend more than 40 hours in any period of four weeks on the inspection of Glass 2 valves unless either:

(i) they are classified workers.

or

(ii) their work does not involve bringing their eyes nearer to a valve than 12 inches.

or

(iii) it can be demonstrated that the dose rate at or near the surface of the valves in question is less than 0.03 millirads in air per hour.

(b) Stocks of Glass 2 valves should not be held in the inspection bay.

(c) In the event of breakage of a valve the procedure given on page 15 should be used.

(d) If more than one valve is broken in any one inspection bay during any one week, monitoring of the area shall be arranged to assess within three days of the last breakage, the extent of the radioactive contamination. Any subsequent necessary decontamination should be arranged.

4.4 Transport

(a) Parcels of Glass 2 valves may be transported in any convenient manner without disclosing to the carrier that there is radioactive material present, subject to the conditions specified below:

(i) The package must be strong enough to maintain its integrity under all the conditions likely to prevail during the journey, including such mishandling and minor accidents as are commonly met with in connection with transport.

(ii) The consignor must verify, by the use of monitoring instruments, that the dose rate at the surface of the package, as presented for transport, does not exceed 0.5 millirads in air per hour. He must keep the record of this verification for six months.

(iii) The package shall not bear on it any indication that the contents are radioactive but shall bear the marking "Class 2".

(iv) The package must contain only Class 2 valves and not more than 250.

Note 1: Condition (ii) above will call for careful attention to spacing of the valves within the package. The requirement is in reality much more stringent than that of 3.4 (a) (ii).

Note 2: When the package is placed in store (see 4.5) the trefoil symbol on it must be in plain view.

(b) Transport of Glass 2 valves in Crown vehicles is subject to all the above conditions.

(c) If the conditions of (a) above cannot be met, then Glass 2 valves must be carried as "White Label" class of the International Atomic Energy Agency Regulations for the Safe Transport of Radioactive Materials.

4.5 Storage

(a) Stocks of Glass 2 valves must be segregated from other stores (except other radioactive electronic valves) and in particular must be kept at least six feet distant from photographic or X-ray film.

(b) The storekeeper must be warned that no person should remain in that portion of the store for longer than is necessary to complete his business there.

(c) If small numbers of Class 2 valves (fewer than 10) are found to be broken in store, the procedure to be adopted is that laid down on Page 15.

(d) If many Class 2 valves are broken in store e.g. through fire or accident, the area should be roped off. Monitoring of the area shall be arranged to assess, within three days, the extent of radioactive contamination. Any subsequent necessary decontamination should be arranged. The Radiochemical Inspectorate Ministry of Housing & Local Government (WHItehall 4300, Extn. 556) should be consulted before any disposal action is taken.

4.6 Building or Repair of Equipment

(a) Provided Class 2 valves remain unbroken they may be handled in exactly the same way as ordinary electronic valves.

(b) If a Class 2 valve becomes broken the procedure of Appendix 1 should be used.

(c) If more than one Class 2 valve is broken in any one shop during any one week, monitoring of the area shall be arranged to assess within three days of the last incident, the extent of radioactive contamination. Any subsequent necessary decontamination should be arranged.

4.7 Normal Service Use (in apparatus and equipment)

Class 2 valves should be treated in exactly the same way as ordinary electronic valves.

4.8 Breakage

(a) There must be no deliberate breakage of Class 2 valves.

(b) In the case of accidental breakage of one or more Class 2 valves, the immediate action is that outlined on page 15.

(c) Broken Class 2 valves must only be disposed of in the manner indicated in 4.10 below.

4.9 Fire

(a) No special action need to be taken until the fire has been extinguished. If stocks of Class 2 valves have been involved in the fire, the site (having been roped off) should be monitored within three days to determine the degree of contamination and suitable further action should be taken if necessary, as decided by the appropriate Departmental Authority.

(b) Disposal of Class 2 valves as waste after a fire must be in the manner indicated in 4.10 below.

4.10 Disposal as Waste

(a) In any one week, at any given premises, no more than 10 Class 2 valves whether broken or not, may be disposed of (e.g. in the dustbin) with other refuse destined to be collected in the ordinary way by the Local Authority.

(b) Broken Class 2 valves must be disposed of on the day the breakage occurred unless more than 10 are involved.

(c) If it is found impossible to dispose of waste Class 2 valves in accordance with paragraphs (a) and (b) above, either because of the number of valves or because of the inadequacy of the available non-radioactive waste in which to disperse them, the Radiochemical Inspectorate, Ministry of Housing & Local Government (WHItehall 4300, Extn. 556) should first be consulted.

(d) If the disposal is necessarily delayed for reasons such as those mentioned in paragraph (c) above, up to five (5) broken Class 2 valves may be placed in a press-in lid container, marked "Broken Class 2 Valves". (See Page).

(e) Class 2 valves must not be disposed of by burial on the premises.

(f) If more than 10 Class 2 valves have to be disposed of on any one occasion, the Radio Chemical Inspectorate Ministry of Housing & Local Government (WHItehall 4300, Extn. 556) should first be consulted.

4.11 <u>Disposal as Surplus to Requirements</u>

Class 2 valves must <u>not</u> be disposed of by sale or in any other way which is likely to result in their falling into the hands of members of the public.

5. Procedures and Precautions for dealing with Radioactive Valves (Hazard Grade) for Joint Service Use

5.1 Definition

A Radioactive Valve (Hazard Grade) is one into whose manufacture there has been introduced a quantity of radioactive material which, by reason of its nature or amount, causes the valve to lie outside the provisions for Class 1 and Class 2 valves.

5.2 Identification (See Figure 3 (page 14))

(a) Each Hazard Grade valve must bear imprinted on it:

(i) The standard trefoil symbol, black on yellow background, generally in accord with BS 3510 Fig. 1.

(ii) The word CAUTION in black lettering.

(iii) The symbol for the isotope used e.g. Sr 90.

(iv) The quantity in microcuries e.g. 5 (or 5 μC if space allows).

Note: (iii) and (iv) should be combined in one expression e.g. 5 Sr 90 (or 5 μC Sr 90).

It is to be understood that so long as the correct proportions are maintained, the size of the trefoil is at the discretion of the manufacturer, subject to a minimum overall diameter of 0.3 inch.

(b) Similar identification must appear on the immediate wrapping (if any) of the valves.

(c) Cartons or boxes containing one or more Hazard Grade valves must be marked in accordance with BS 3510 Fig. 1 and must carry in bold lettering the inscription: Radioactive - handle only as instructed.

5.3 Statutory Rules and Orders

(a) The Radioactive Substances (Electronic Valves) Exemption Order does not apply.

The Ministry of Housing & Local Government must be notified of all Hazard Grade valves held on premises.

(b) Factories Act 1961, Ionising Radiations (Sealed Sources) Regulations 1961.

Hazard Grade valves must be presumed to be sealed sources within the meaning of the Regulations unless the contrary can be proved.

In premises governed by the Factories Act, the Regulations must be complied with in detail. In other premises the spirit of the Regulations ought to be observed, but the appropriate Departmental Authority should stand in the place of the District Inspector of Factories. This applies particularly to Inspection and the Building and Repair of Equipment. There is a likelihood that personnel will have to be classified workers.

5.4 Transport

The Regulations for the Safe Transport of Radioactive Materials, issued by the International Atomic Energy Agency must be complied with. Part B of these regulations details the preferred method. These Regulations may be purchased from H.M.S.O.

5.5 Storage

Hazard Grade valves must be kept in stores set apart for radioactive materials.

5.6 Normal Service Use (in apparatus and equipment)

If necessary, personnel must be told not to approach nearer than a specified distance. The appropriate Departmental Authority will give a ruling.

5.7 Fire

No special action should be taken until the fire has been extinguished. Within three days afterwards a monitoring survey should be carried out and appropriate action taken, as decided by the appropriate Departmental Authority. Meanwhile the site should be placed out of bounds.

5.8 Disposal as Surplus to Requirements

Hazard Grade valves surplus to requirements may only be disposed of by returning them to the manufacturer or by treating them as waste, in the latter case, approval to the disposal must be obtained from the Radiochemical Inspectorate Ministry of Housing & Local Government (WHItehall 4300, Extn. 556).

5.9 Breakage

Specific instructions, prepared in advance by a competent person, must be available.

Figure 1

'Theta' Marking for Class 1 Radioactive Valves

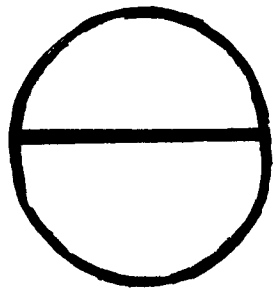

Minimum overall dimension
= 0.1 inch.

Figure 2

Marking for Class 2 Radioactive Valves

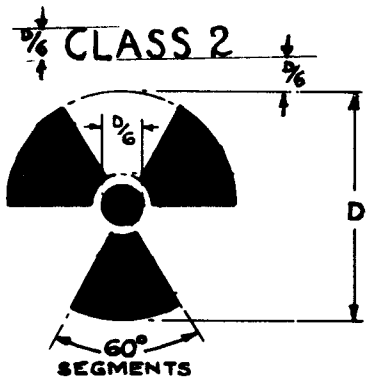

Figure 3

Marking for Hazard Grade Radioactive Valves

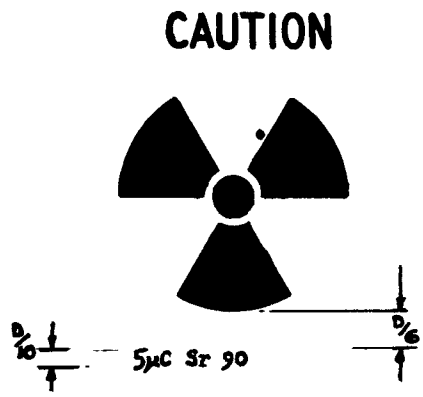

Size of Imprinting

(Figures 2 and 3)

(a) VALVES

Dimension 'D' to be not less than half the diameter of bulb or envelope.

(b) PACKAGES

Where smallest side dimension (Y) or smallest end dimension (Z) of package is:-

Below 2 inches then 'D'=Y/2 or Z/2

From 2 to 6 inches then 'D' = Y/3 or Z/3

Above 6 inches then 'D' = Y/4 or Z/4 (maximum 6 inches).

Annexe 1.

Procedures for dealing with Broken Class 2 Radioactive Valves

1. The procedures detailed below apply when a single radioactive valve Class 2 has been accidentally broken.

The same procedures will apply if more than one valve is broken in the same accident provided the number is not large.

(a) Do not eat drink or smoke in the contaminated area.

(b) Using a damp cloth, adequate to protect the hands, brush the remnants carefully on to a piece of cardboard or stiff paper and place the whole lot (cloth, debris and card or paper) straight into a dustbin already containing ordinary waste material. If this last procedure cannot be followed, the whole lot may be placed in a tin (2 lb. size would be suitable) with a press-in lid. The container should be labelled "Broken Class 2 valves" and placed in a safe place pending disposal which should be as prompt as possible (see Provision 4.10).

(c) Using a second damp cloth, wipe across the contaminated area until it is visibly clean, folding the cloth in half after each stroke keeping the clean side out at all times. Avoid rubbing particles into the surface being cleaned. When the process is complete, add this cloth to the other radioactive waste.

(d) Wash the hands very thoroughly.

Note: Any cuts or abrasions caused by the breakage or sustained during the clean-up process should at once be washed clean and then treated in the normal manner.

Annexe 2

LIST OF U.K. MANUFACTURED JOINT SERVICE VALVES WHICH MAY BE RADIOACTIVE

CV No.	Manufacturer	Radionuclide	Quantity per Valve (μ C)	Radioactive Class
CV188	Mullard	Hydrogen 3		1
CV216	"	"		1
CV431	"	"		1
CV449	"	"		1
CV460	E.E.V.	Nickel 63		1
CV461	"	"		1
CV462	"	"		1
CV463	"	"		1
CV1070	Mullard	Hydrogen 3		1
CV1832	"	"		1
CV1833	"	"		1
CV1992	"	"		1
CV2225	"	"		1
CV2236	"	"		1
CV2248	Ferranti	Hydrogen 3	< 150	1
CV2249	"	"	< 150	1
CV2250	"	"	< 150	1
CV2251	"	"	< 150	1
CV2252	"	"	< 150	1
CV2255	Mullard	"		1
CV2271	"	"		1
CV2274	E.E.V.	Nickel 63		1
CV2308	"	"		1
CV2309	"	"		1
CV2325	Mullard	Hydrogen 3		1
CV2374	Ferranti	Hydrogen 3	< 150	1
CV2375	"	"	< 150	1
CV2434	Mullard	"		1
CV2482	Nore Electric	Hydrogen 3	92	1
CV2483	" "	"	92	1
CV2573	Mullard	"		1
CV3987	"	"		1
CV4020	"	"		1
CV4028	"	"		1
CV4048	Mullard	"		1
	E.E.V.	Uranium Oxide (U_3O_8)		1
CV4054	E.E.V.	" "		1
	Mullard	Hydrogen 3		1
CV4066	"	"		1
CV4080	"	"		1

CV No.	Manufacturer	Radionuclide	Quantity per Valve (μ C)	Radioactive Class
CV4100	Mullard	Hydrogen 3		1
CV4101	"	"		1
CV4104	"	"		1
CV4516	"	"		1
CV5122	"	"		1
CV5132	"	"		1
CV5173	"	"		1
CV5229	Ferranti	"	<150	1
CV5278	Mullard	"		1
CV5285	E.E.V.	Uranium OxideU308		1
CV5312	Ferranti	Hydrogen 3	<150	1
CV5384	Hivac	"		1
CV5820	Mullard	"		1
CV6028	Nore Electric	"		1
CV6070	E.E.V.	Nickel 63		1
CV6086	Nore Electric	Hydrogen 3		1
CV6089	" "	"		1
CV6110	" "	"		1
CV6129	M.O.V.	"	3200	HAZARD GRADE
CV8063	Mullard	"		1
CV8105	Ferranti	"	<150	1
CV8292	Mullard	"		1
CV8380	Ferranti	"	<150	1
CV8462	Mullard	"		1
CV8482	"	"		1
CV8572	"	"		1
CV8670	M.O.V.	Thorium	0.003	1
CV8671	"	"	0.003	1
CV8679	Mullard	Hydrogen 3		1
CV8906	"	"		1
CV8958	M.O.V.	Thorium	0.003	1

Annexe 3

LIST OF AMERICAN MANUFACTURED BRITISH JOINT SERVICE RADIOACTIVE VALVES

SHOWING BRITISH CV NUMBERS AND AMERICAN TUBE TYPES

(Note: The information in Columns 3, 4 and 5 below is extracted from SSC.347)

Column 1	Column 2	Column 3	Column 4	Column 5
CV Number	American Type	Manufacturer	Isotope	Isotope Quantity per Tube (Microcuries)
508	1B49	West	Ra 226	2.0
539	1B23	Bomac	Co 60	0.15
539	1B23	Cent	Co 60	0.5 to 1.0
576	1B26	Bomac	Co 60	0.15
577	1B36	Bomac	Co.60	0.25
713	1B27	Bomac	Co 60	0.15
725	1B24	West	Ra 226	2.0
761	1B22	Bomac	Co 60	0.25
-	BL-63			
1793	724B	Bomac	Co 60	0.15
1832	0A2	Ray	Co 60	0.0067
1833	0B2	Ray	Co 60	0.0067
2573	5651	Ray	Co 60	0.0067
2615	313C	WE	Ra 226	0.01
2626	346A	-	-	-
-	346B	WE	Ra 226	1.0
2826	1B63A	Bomac	Co 60	0.15
"	1B63A	Microwave	Co 60	0.5
"	1B63A	Syl	Co 60	1.0
2914	1B40	Bomac	Co 60	0.2
"	1B40	Syl	Co 60	1.0
3539	6024/ATR387	Bomac	Co 60	0.45
3548	1B24A	Bomac	Co 60	0.15
"	1B24A	Microwave	Co 60	0.5
"	1B24A	Syl	Co 60	1.0
"	1B24A	West	Ra 226	2.0
3549	1B38	Bomac	Co 60	0.9
3550	1B41	Bomac	Co 60	0.25
"	1B41	West	Ra 226	2.0
3628	1B35A	Bomac	Co 60	0.4
"	1B35A	Syl	Co 60	1.0
-	5791	-	-	-

Column 1 CV Number	Column 2 American Type	Column 3 Manufacturer	Column 4 Isotope	Column 5 Isotope Quantity per Tube (Microcuries)
-	5791/X6007	Syl	Co 60	1.0
-	446	AE	Co 14	1.0
3745	1B58	-	-	-
-	GL-1B58	GE	Co 60	0.475
3877	1B56	Bomac	Co 60	0.45
3897	5787	Ray	Co 60	0.0067
3906	6117	Bomac	Co 60	0.45
"	6117	Microwave	Co 60	0.5
"	6117	Syl	Co 60	1.0
3933	5783	Ray	Co 60	0.0067
3960	5783WA	Ray	Co 60	0.0067
4020	0A2WA	Hy	Ni 63	0.01-0.05
"	0A2WA	Ray	Co 60	0.0067
4028	0B2WA	Hy	Ni 63	0.01-0.05
"	0B2WA	Ray	Co 60	
5062	5841			
5113	5787WA			
5186	5651WA	Ch	Ra 226	0.045-0.055
"	5651WA	Ray	Co 60	0.0067

SERVICES LIST OF PREFERRED VALVES

NOTICE

For Design and Production Authorities (Issue 2)

1. This list of Preferred Electronic Valves has been prepared under the authority of the Joint Services Technical Valve Committee to guide design and production authorities in their choice of valves. Valves for use in Service equipments must be selected from this list wherever possible.

For a valve to be Preferred it must:

(a) Be the best of its kind technically having due regard to the N.A.T.O. Priority List.

(b) Have a CV Specification.

(c) Be Type Approved.

(d) Have been in production.

2. When any electronic equipment is under development for any of the Services or when consideration is being given to the purchase of any proprietary equipment containing electronic items the proposed valve complement must be submitted to the Technical Valve Committee for approval. If a submission includes any valves not appearing in this List of Preferred Valves the proposal to use them must be supported by sound technical reasons.

3. Design and production authorities concerned with the introduction of new equipments are advised to submit their proposals, particularly when non-preferred valves are concerned, at the earliest possible stage in the development of the equipment so that advice may be given and/or difficulties of valve supply reduced.

Designers are asked to bear in mind that the use of non-preferred valves may lead to difficulties in supply during the Service life of the equipment.

4. Submissions for approval should be addressed to:-

The Secretary, Technical Valve Committee,
Ministry of Aviation,
Castlewood House,
77-91 New Oxford Street, W.C.1.

Government Establishments will submit valve lists through their valve officers; designers with firms will normally submit valve lists through the appropriate design authority.

5. Guidance Valves

Guidance valves consist of the following categories:-

(a) Those expected to become Preferred when they fulfil the criteria for Preferred given above.

(b) Some N.A.T.O. Preferred Types having United Kingdom production sources but not included in the United Kingdom Preferred List.

(c) Types which are sometimes necessary to meet special requirements, but which for reasons of manufacturing complexity, expense, etc, are not included in the Preferred List.

(d) Certain CV4000 valves not yet in production.

(e) All B7G, B9A Flying Lead Valves due to possible production difficulties.

/Designers

Designers wishing to use these valves should consult the Approving Authority.

6. Valve Tolerances

It must not be assumed that the characteristics of Service Valves are identical with those of the commercial prototype.

Equipment must be designed to accept, as replacements, any valves meeting the Service Test Specification concerned both in respect of dimensions and electrical tolerances. Should this appear impossible, the Service contract or design authority should be consulted at the earliest moment and a design must not proceed until the future supplies of suitable valves have been assured by the Service.

7. Codes of Practice

Designers of equipment for Service use are advised to follow the recommendations given in the British Standards Institution Code of Practice:-

CP 1005 Code of Practice on the use of Electronic Valves.

Semi-conductor Devices Designers are advised to consult the Booklet;

"The Use of Semi-conductor Devices"

published by the Electronic Valve and Semi-conductor Manufacturers' Association which is available from any of the Semi-conductor manufacturers and the Secretary of the Technical Valve Committee.

8. Consideration should always be given to the overall economy of spares affected by adopting the minimum number of different types in any application.

Secretary
Technical Valve Committee

JULY, 1961.

Preferred and Guidance Valves

List of Pinned and Flying Lead Equivalents

Pinned Valve	Flying Lead Valve	Basic Type
CV4003	CV4034	CV491
CV4004	CV4035	CV492
CV4005	CV4001	CV493
CV4007	CV4049	6AL5
CV4009		CV454
CV4010	CV4050	CV850
CV4012	CV4037	CV453
CV4014	CV4002	CV138
CV4015	CV4084	CV131
CV4018		CV797
CV4020		CV1832
CV4024	CV4033	CV455
CV4028		CV1833.
-		-
CV4031	CV4076	CV858
CV4039		CV2129
CV4043	CV4045	CV2136
CV4044	CV4036	CV2235
CV4048	CV4054	-
CV4055	CV4056	CV2127
CV4057	CV4042	CV371
CV4058		CV133
CV4060		
	CV4061	CV2289 approx.
CV4062	CV4065	CV2179
CV4064	*CV4083 approx. (No g3 diode)	CV2209
CV4068	CV4069	CV2212
CV4070		CV417
CV4071	CV4072	CV404
CV4079	CV4038	-
CV4080		75C1
	CV4081	
CV4082		CV2231 approx.
CV4085	CV4086	CV2901

*Current NOT Preferred or Guidance.

JM

TECHNICAL VALVE COMMITTEE

T.V.C. INFORMATION SHEET NO. 5.

INTRODUCTION OF:-

(A) SPECIFICATION ISSUE NUMBER ON TYPE APPROVAL CERTIFICATES

(B) REPRINT LETTER TO FOLLOW ISSUE NUMBER ON CV SPECIFICATIONS

To clarify the validity of CV Valve Type Approval Certificates on re-issue/reprinting of the corresponding CV Specification, it has been agreed to introduce the following actions forthwith:-

1. The form of heading for future CV Valve Type Approval Certificates will be revised to:-

"CERTIFICATE OF JOINT SERVICE TYPE APPROVAL
OF ELECTRONIC VALVES TO SPECIFICATION ISSUE NO.....
FOR VALVE TYPE NO. CV.....".

2. When a CV Specification is reprinted with changes which do NOT affect Type Approval, then the Specification Issue Number will remain the same but the suffix "Reprint A", or "Reprint B" etc. as appropriate, will follow the unchanged Issue Number.

3. When a CV Specification is reprinted with changes which DO affect Type Approval, then the Specification Issue Number will be changed.

4. Decision as to whether Type Approval is affected by any proposed changes lies with the Valve Type Approving Authority after consultation with the Valve Specification Authority if this is different.

5. In future Production Contracts the Specification Title should include the Issue Number and Reprint Letter. If a Specification is re-issued or reprinted whilst a Contract is running the Issue Number and Reprint Letter quoted on the Contract will continue to apply unless the Contract is amended.

G. P. Ogilvie
for Secretary
Technical Valve Committee

April, 1959.

Z.19037.

RADIO COMPONENTS
STANDARDIZATION
COMMITTEE
INFORMATION SHEET No. 41

TECHNICAL VALVE
COMMITTEE
INFORMATION SHEET No. 15

Obtaining Qualification Approval to Foreign Specifications

A N.A.T.O. Standardization Agreement (STANAG 4093), Mutual Acceptance of Qualification Approvals for Electronic Parts, allows for the obtaining, by a U.K. manufacturer, of Qualification Approval to a military specification of another country, within the N.A.T.O. group, which has ratified the STANAG. It also allows for the listing on the foreign Qualified Products List (QPL) of approved products.

The approval is obtained through the R.C.S.C. or T.V.C. (as appropriate) and the U.K. National Co-ordinating Activity (N.C.A.).

A document has been prepared, under the title "Mutual Acceptance of Qualification Approval for Electronic Parts - N.A.T.O. STANAG 4093 - Implementation in the U.K.", which gives an interpretation of the STANAG and details of the procedure to be followed for obtaining Qualification Approval to the foreign specifications.

The document is obtainable from the Secretary, R.C.S.C., or T.V.C. (as appropriate) Castlewood House, 77-91, New Oxford Street, London, W.C.1

G.E. MILLER
Secretary, R.C.S.C.

C.M. GOODCHILD (Miss)
Secretary T.V.C.

September, 1965

N.222118

CATHODE RAY TUBE

SCREEN CODE

First Letter Colour of Flash	Second Letter Colour of Afterglow	Third Letter Length of Afterglow
B = Blue	B = Blue	L – 5 secs. upwards
G = Green	G = Green	M – 1 sec. to 5 sec.
Y = Yellow	Y = Yellow	S – 0.1 sec. to 1 sec.
R = Red	R = Red	N – 1 millisec. to 0.1 sec.
O = Orange	O = Orange	K – less than 1 millisec.
W = White	W = White	
U – Ultra Violet		

This code will in due course be replaced by an amended Code in which the first two letters are unchanged and the third will be replaced by a number selected according to the following table. The afterglow is defined as the time taken from the cessation of excitation for the brightness to decay from a level of one equivalent Foot Candle to one per cent of that value.

T A B L E

Symbol	Length of Afterglow		Description
	Min.	Max.	
1	–	10 us	Killed. (K)
2	10 us	100 us	Ultra short (US)
3	100 us	1000 us	Very short (VS)
4	1 ms	10 ms	Short (S)
5	10 ms	100 ms	Medium short (MS)
6	100 ms	1000 ms	Medium (M)
7	1 s	10 s	Medium long. (ML)
8	10 s	100 s	Long. (L)
9	100 s	–	Very long. (VL)

e.g. The blue photographic screen BBK will become BB1 and the double layer afterglow BYL will become BY8.

Z.5765.R.

OPERATING CONDITIONS WITH VARYING ANODE VOLTAGE

Some valve specifications contain a maximum anode voltage rating for Ia = 0 in addition to the normal maximum operating anode voltage. The BVA has agreed that the logical intermediate ratings may be used when the valve is normally operating under R.C. coupled conditions.

The formula for obtaining these ratings is:-

$$Ia(i) = 4Pa \frac{\left[Va(b) - Va(i) \right]}{\left[Va(b) \right]^2} \quad A$$

Where

Ia(i) is the maximum anode current for a given intermediate anode voltage Va(i).

Va(i) (volts) is intermediate between Va(b) and the normal Va maximum.

Va(b) (volts) is the maximum value of anode voltage when Ia = 0.

Pa (watts) is the maximum anode dissipation.

TVC Office
April, 1953

Z.4552.R.

MOUNTING POSITION FOR VALVES IN THE SERVICES LIST OF PREFERRED VALVES

The following information will eventually be included on individual test specifications as and when these are revised. Should details on any type not be available from either source reference should be made to the Specification Authority.

Valve Type	Mounting Position
CV273	Any
CV337	Vertical
CV354	Any
CV370	Any
CV372	Any
CV389	Any
CV391	Any position provided requirements for air cooling are observed for Wa in excess of 16W.
CV420	Any
CV428	Any
CV468	Any
CV808	Any
CV1530	Any
CV2115	Any
CV2130	Vertical, base up or down
CV2131	Vertical, base up or down
CV2132	Any
CV2133	Any
CV2134	Any
CV2171	Any
CV2213	Any
CV2270	Any

SERVICES LIST OF PREFERRED VALVES

VALVE BASE PIN NUMBERING

VIEWS FROM UNDERSIDE OF BASE

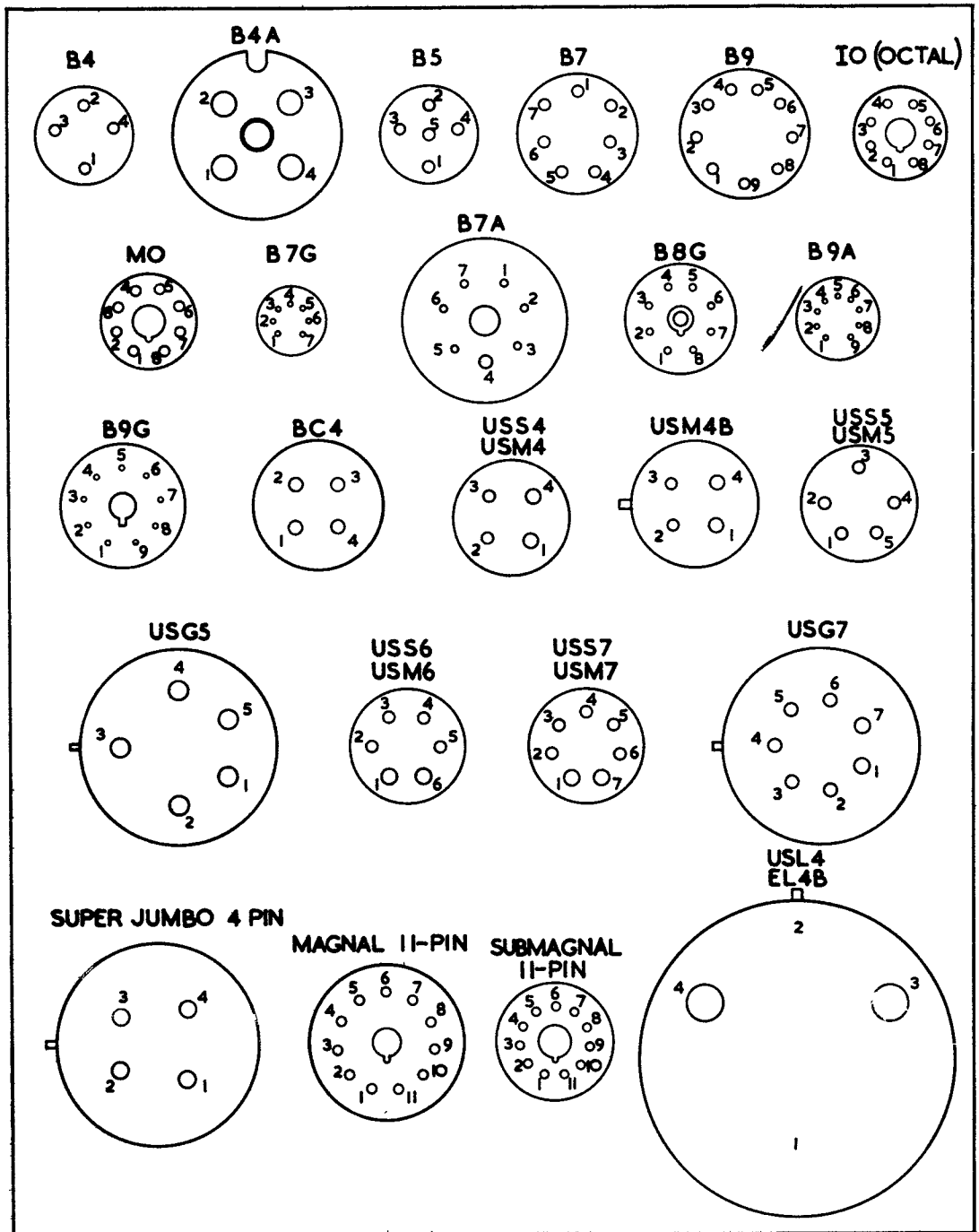

JAN. 1950

S.L.P.V.

Z.21781

SERVICES LIST OF PREFERRED VALVES

VALVE BASE PIN NUMBERING

VIEWS FROM UNDERSIDE OF BASE.

T4
U.S. JUMBO

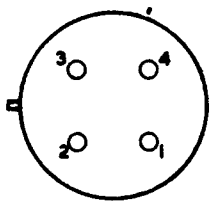

CL3

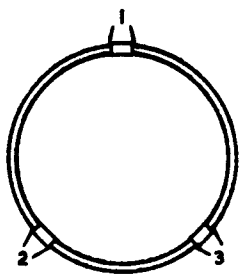

CL6

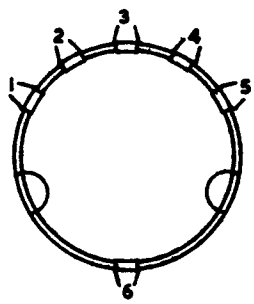

CL7

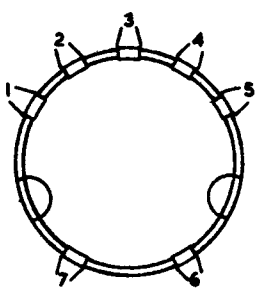

B12D

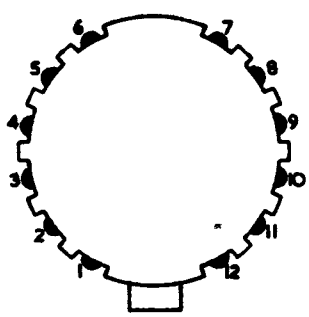

B12B

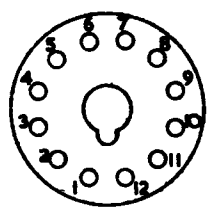

EM8

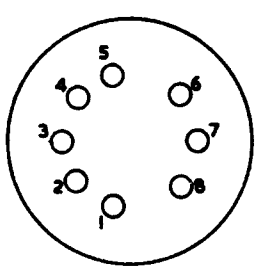

B15A3

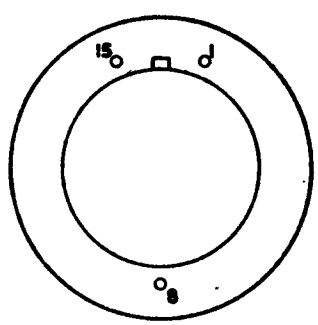

S.L.P.V.

JAN 1950

FUNCTIONAL CLASSIFICATION OF SERVICE PREFERRED, GUIDANCE AND CURRENT VALVES

A.L.1. d/d. Jan. 1963. Incorporated. M.S.K.

1. This publication is designed to provide a means of choosing a suitable valve for a given use by:-

(a) Listing the valves according to type,

(b) Showing the relation of each type to others in the same class.

2. It is emphasised that valves must be chosen, if possible, from the Services List of Preferred Valves. The Availability Classification (Preferred or otherwise) shown herein should be checked with the Preferred List before design work begins.

3. The latest issue of the specification should be consulted to confirm the technical information given.

January, 1963

(163443)

DEFINITIONS OF AVAILABILITY CLASSIFICATIONS

4.1. PREFERRED TYPES

Types which are the best of their kind technically, provided

(a) A C.V. Specification exists

(b) Qualification Approval has been given

(c) There is an assurance of continued production.

4.2. GUIDANCE TYPES

(a) Types expected to become Preferred when they fulfil the criteria for Preferred given above.

(b) Some N.A.T.O. Preferred Types having U.K. production sources but not included in the U.K. Preferred List.

(c) Types which are sometimes necessary to meet special requirements, but which for reasons of manufacturing complexity, expense etc., are not included in the Preferred List.

(d) Certain CV.4000 valves not yet in production.

(e) All B7G, B9A Flying Lead Valves due to possible production difficulties.

4.3. CURRENT TYPES

Valves which may be available to designers of new equipment in addition to those in the Preferred List.

	Page
Cathode Ray Tubes	4
Coaxial Line Oscillators	34
Decade Scaling Tubes	41
Decade Selectors	41
Diodes	6
Diodes, Double	6
Diodes, Damping	6
Diodes, Noise Sources	26
Double Diodes	6
Double Tetrodes	20
Double Triodes	24
Gas Switches	36
Heptodes	25
Ignitrons	41
Indicators, Power (Standing Wave)	39
Indicators, Tuning	41
Indicators, Voltage	41
Klystrons	34
Local Oscillators	34
Magnetrons	32
Mercury Arc Rectifiers	41
Miscellaneous	41
Modulators, Hydrogen Thyratrons	31
Noise Sources, Diodes	26
Noise Sources, Discharge Tubes	26
Monitor Diodes	41
Pentodes (Va < 500V)	11
Pentodes (Va > 500V)	17
Photocells and Photomultiplier Tubes	30
Power Limiting Gas Cells	38
Pulsed Attenuators	38
Rectifier List	7
Chart	10

	Page
Rectifiers, Mercury Arc	41
Relay Valve, Cold Cathode	39
Spark Gaps	40
Stabilisers, Corona	29
Stabilisers, Series	41
Stabilisers, Shunt	41
Stabilisers, Voltage	28
T.B. Cells	37
T.R. Cells	36
Pre-T.R. Cells	37
Tetrodes and Pentodes (Va ⩽ 500)	11
Tetrodes and Pentodes (Va > 500V)	17
Tetrodes and Triodes (Gas Filled)	27
Tetrodes, Double	20
Thyratrons, Inert Gas Filled	27
Thyratron Hydrogen Modulators	31
Travelling Wave Amplifiers	35
Trigger Tubes	41
Triggered Spark Gap	41
Triode Heptodes	25
Triodes (Va< 500V)	21
Triodes (Va >500V)	23
Triodes, Double	24
Triodes, Inert Gas Filled	27
Triode Hydrogen Modulators	31
Tuning Indicators	41
Voltage Indicators	41
Voltage Reference Tubes	28
Voltage Stabilisers	28
V.M. Tubes and Coaxial Line Oscillators	34
Voltage Tuned Oscillators	35
C.R.T. Screen Colour Code	42

CATHODE RAY TUBES

(Arranged in ascending order of nominal bulb diameter)

CV No.	Availability Classn.	Nom. Bulb Dia. (ins.)	Defln.	Focus	Max. Final Anode Voltage (kV)	Mean Plate Sensitivity X (mm/V)	Mean Plate Sensitivity Y (mm/V)	Screen Type (See Page 42)	Min. Useful Screen Area (mm)	Base	Remarks
2302	P	1	ES	ES	1.0	95/Va3	110/Va3	GG5	24 dia	B8G	
389	C	)						) GGN	)		
2211	C	) 1½	ES	ES	4.0	0.10	0.093	) BBN	) 35 dia.	B9G	PDA
2272	C	)						) BY8	)		
6050	C	2¼	M	M	25	-	-	GG5	46 dia.	B9A/D	
6095	C	2½	ES	ES	0.7	510/Va3	867/Va3	GG5-6	55 dia.	B9G	
2175	C	2½	ES	ES	1.0	128/Va2	196/Va2	GG5	61 dia.	B9G	
2431	G	2½	ES	ES	0.8	110/Va3	175/Va3	GG2	61 dia.	B9G	
3946	G	3	ES	ES	2.75	0.363	0.529	GGN	70 dia.	B12A	
420	P	)						) 008	)		
2230	P	) 3½	M	ES	8.0	-	-	) BB1	) 80 dia.	B8G	
2244	P	)						) YY7	)		
2292	C	4	ES	ES	3.0	290/Va3	390/Va3	YYN	-	B12G	Compass Tube
2193	P	4	ES	ES	4.0	750/Va3	650/Va3	GGN28	90X55	*	Double beam *11 Contact Clip Type
2185	C	4½	ES	ES	4.0	630/Va3	950/Va3	GGN	85 dia.	*	*11 Contact Clip Type

Contd. over

CATHODE RAY TUBES (Continued)

CV No.	Availability Classn.	Nom. Bulb Dia. (ins.)	Defln.	Focus	Max. Final Anode Voltage (kV)	Mean Plate Sensitivity X (mm/V)	Mean Plate Sensitivity Y (mm/V)	Screen Type (See Page 42)	Min. Useful Screen Area (mm)	Base	Remarks
2464	C	5	M	ES	8.0	-	-	YY7	109 dia.	B12A	
2469	C	5	M	ES	8.0	-	-	Willemite	105 dia.	B12A	
2191	C	5¼	ES	ES	5.0	0.30	0.35	GGN	124 dia	B14A	PDA
5035	G	5¼	ES	ES	6.6	0.75	0.93	GG4	108 dia.	B14A	PDA
3954	C	5¼	ES	ES	4.4	-	-	-	124 dia.	B12/37	
5125	G	5¼	ES	ES	-	800/Va3	900/Va3	GGN	125 dia.	B12/37	
6109	C	6 (Rect)	ES	ES	6.0	1000/Va3	1270/Va3	BY8	125 x 35	B12F	
2498	P	6 (Rect)	ES	ES	6.0	925/Va3	1000/Va3	BY8	125 x 35	B14A	
2352								GG4			
307	P	6	M	ES	8.0	-	-	BBN	135 dia	B80	
2435	P	6	M	ES	8.0	-	-	GG4	135 dia.	B80	
1530	P	6	M	ES	8.0	-	-	YYM	135 dia.	B80	
2415	P	6	M	ES	8.0	-	-	009	135 dia.	B80	
5119	G	6	M	M	12.5	-	-	GG5	-	B12A	Concave Face
2904	C	7	M	M	.18	-	-	009	165 dia.	B80	
464	C	9	M	ES	9.0	-	-	OOL	190 dia.	B80	
2463	G	9	M	M	15.5	-	-	009	200 dia.	B12A	
2447	P	12	M	M	9.0	-	-	BB1	250 dia.	B12A	
429	P	12	M	M	15.5	-	-	009	250 dia.	B12A	
2314	P	12	M	M	15.5	-	-	BY8	250 dia.	B12A	
2388	C	20	M	M	15.5	-	-	009	480 dia	B12A	

DIODES AND DOUBLE DIODES

CV.No.	Availability Classn.	Cathode	Heater (V)	Heater (A)	Max. P.I.V. (V)	Max.Mean Ia (mA)	Max.Peak Ia. (mA)	Max. Vh-k (V)	Base	Remarks
4007	P	IH	6.3	0.3	360	10	60	360	B7G	Double Diode
4049	G	IH	6.3	0.3	360	10	60	360	B7G/F	Double Diode
2318	C	IH	6.3	1.6	1600	100	600	250	B9G	Diode

DAMPING DIODES

(In order of Short Pulse P.I.V.)

CV No.	Availability Classn.	Short Pulse P.I.V. Max. (kV)	Fault P.I.V. Max. (kV)	Short Pulse Peak Ia.Max. (A)	Internal Resistance Nominal (ohms)	Internal Resistance Measured at (A)	Anode Dissipation (W)	Base	Remarks
265	C	4.0	5.5	15	36	12	5	B8G	
2264	C	6.5	9	26	29	26	15	B4A	
490	C	27	35	10*	105	8	32	GES	*1A as Rectifier) Also listed
2160	P	40	-	30*	600	0.3	130	GES	*1.1A as Rectifier) as a Rectifier

RECTIFIERS

(Arranged in ascending order of C.V. Number)

C.V. No.	Availability Classn.	Type	Heater		Max. No Load P.I.V. (kV)	Max. Mean d.c. Current (mA)	Max. Peak Current (A)	Base	Remarks
			Vh (V)	Ih (A)					
482	C	DH, HW, HV	4	12	65	2500*	-	G.E.S.	*Min. total emission, Max. Mean Pa = 100W.
490	C	IH, HW, HV	4	4	20*	350	1	G.E.S.	*P.I.V. = 27 kV under tp = 2 μS conditions. Also listed under Damping Diodes.
717	C	DH, FW	5	2	3.05	275	0.7	B80	C.Res. = 4 μF at 50 c/s.
1504	C	DH, HW	16.5	15.25	63	200	1.2	Medium E.S.	Max. Pa. = 400W.
1835	P	DH, HW Gas Filled.	2.5	5	10	250	1	USM4B	
2115	P	DH, HW, HV	1.25	0.2	33*	2.2	0.0187	B80	*Max. Working P.I.V.
2125	C	DH, HW, Gas Filled.	2.5	5	2*	500	2	B4	*Max. Working P.I.V.

(Contd. over)

RECTIFIERS (Continued)

C.V. No.	Availability Classn.	Type	Heater Vh (V)	Heater Ih (A)	Max.No. Load P.I.V. (kV)	Max. Mean d.c. Current (mA)	Max. Peak Current (A)	Base	Remarks
2160	P	DH, HW, HV	4	12	40*	300	1.1	G.E.S.	*Max. Working P.I.V. Max. Pa. = 130 W. (Also listed under Damping Diodes)
2180	C	IH, HW	2.5	1.7	23	30	0.18	B8G	C.Res. = 0.5 μF. (0.1 μF for 1600 c/s).
2399	C	DH, HW, gas filled.	4	11	13	1250	6	G.E.S.	
2518	P	DH, HW, gas filled.	5	7	10	1250	5	B4F	
4001 4005	C	IH, FW, HV	6.3	0.6	1.375	75	0.23	B7G/F B7G	C.Res. = 8 to 32 μF. at 50 c/s input.
4036 4044	G P	IH, HW	6.3	1.15	1.8	300	0.9	B9A/F B9A	C.Res. = 16 μF at 50 c/s input

(Contd. over)

RECTIFIER (Continued)

C.V. No.	Availability Classn.	Type	Heater Vh (V)	Heater Ih (A)	Max. No. Load P.I.V. (kV)	Max. Mean d.c. Current (mA)	Max. Peak Current (A)	Base	Remarks
4061	P	DH, HW, HV	1.4	0.15	15*	2	0.012	None	C.Res. = 0.005 µF at 50 c/s input and 0.001 µF at 20 Kc/s, Tp = 5 µS. *Flyback circuits. Max. P.I.V. = 10 kV in switched circuits.
4071 4072	)) G	IH, HW, HV	4	1.5	16.5	50	0.3	)B80)Special	C.Res. 0.25 µF. at 50 c/s input.
4075	G	IH, HW, HV	6.3	0.265	30*	4	0.3	B80	*Max. Working P.I.V.
4116	C	IH, HW, HV	4	1.5	17.5	50	0.3	B80	C.Res. = 0.25 µF at 50 c/s input.
6025	C	IH, HW, HV	6.3	3.6	18* 20†	260* -	2* 13†	B4A	*Rectifier Ratings. †Overswing Diode.
6092	C	IH, HW, HV	6.3	2	18	100	0.6*	Medium E.S.	*Rectifier Ratings. Inverse Diode Applications, Max. Ia pulse = 7.5A and 14A under Fault Conditions.
6119	C	IH, HW, HV	4	4.8	25	150	0.9	G.E.S.	Also suitable for Inverse diode applications.

RECTIFIER CHART

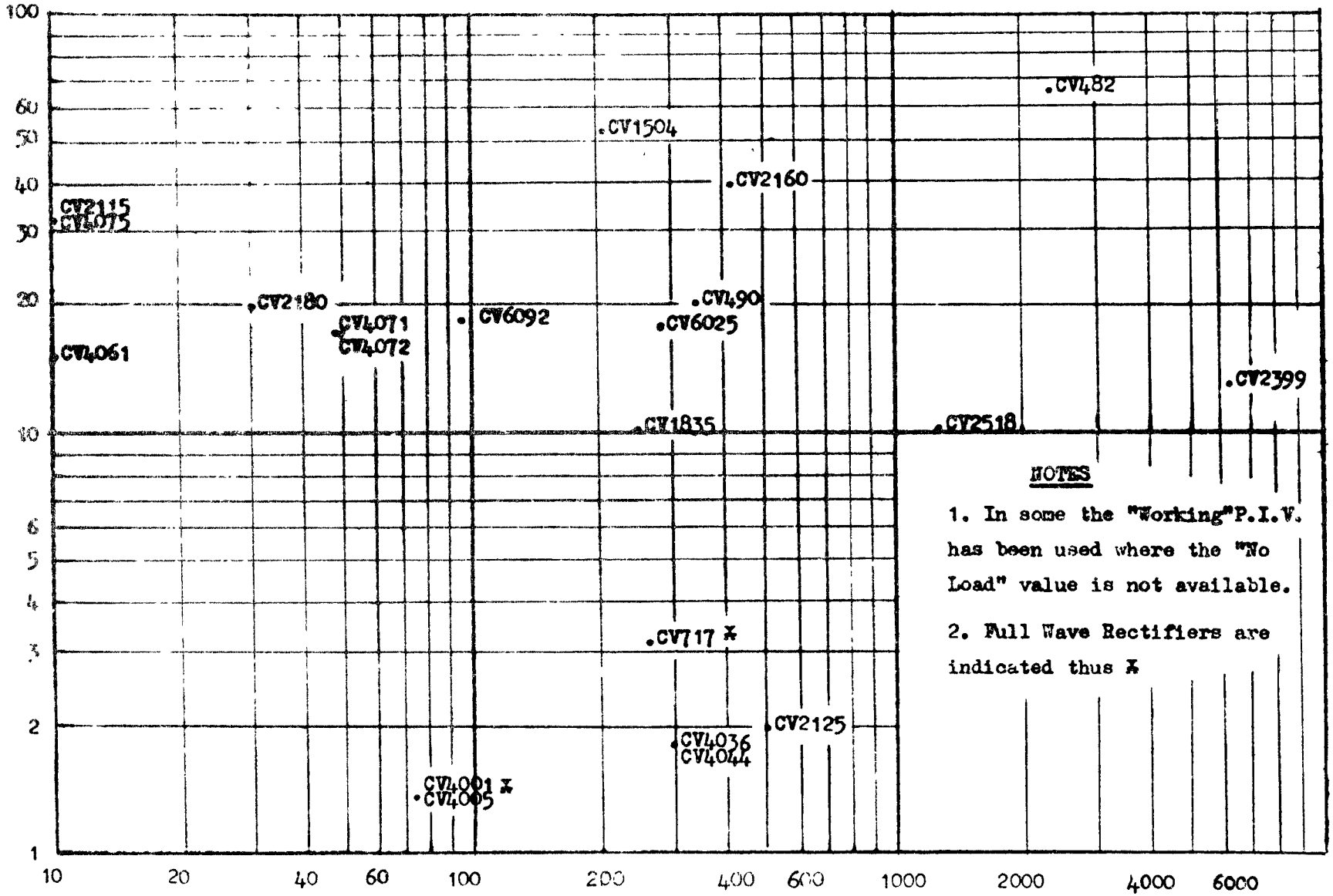

NOTES

1. In some the "Working" P.I.V. has been used where the "No Load" value is not available.
2. Full Wave Rectifiers are indicated thus X

May 1963

TETRODES and PENTODES (LOW ANODE VOLTAGE 500V)

(In ascendin order of Heater Voltage and then Mutual Conductance)

C.V. No.	Availability Classn.	Cathode	Heater		Max. Pa (W)	Max. Va (V)	Max. Pg2 (W)	Max. Vg2 (V)	gM (mA/V)	Ra (MΩ)	Max. Vh-k (V)	Max. Freq. (Mc/s)	Base	Remarks
			VH (V)	Ih (A)										
4092	P	DH	1.25	0.020	-	100	-	100	0.65	-	-	-	B5G/F	Sub-miniature, Audio Output. Beam Tetrode.
2371	C	DH	1.25	0.025	-	100	-	100	0.95	1.6	-	-	B5A/F	Sub-miniature.
4093	P	DH	1.25	0.020	-	100	-	100	1.1	1.0	-	-	B5G/F	Sub-miniature. H.F. Beam Tetrode, Sharp Cut-off.
4096	C	DH	1.25	0.020	-	100	-	100	1.1	1.0	-	-	B5G/F	Sub-miniature HF. Beam Tetrode, Sharp Cut-off.
2240	C	DH	1.25 2.5	0.33 0.165	3	150	1.1	135	1.85	-	-	100	B7G	R.F. Beam Power Amplifier Transmitting.

(contd. over)

TETRODES and PENTODES (LOW ANODE VOLTAGE < 500V) (continued)

C.V. No.	Availability Classn.	Cathode	Heater		Max. Pa (W)	Max. Va (V)	Max. Pg2 (W)	Max. Vg2 (V)	gM (mA/V)	Ra (MΩ)	Max. Vh-k (V)	Max Freq. (Mc/s)	Base	Remarks
			Vh (V)	Ih (A)										
4094	P	DH	1.25	0.1	-	100	-	100	2.0	-	-	-	B5G/F	Sub-miniature R.F. Beam Tetrode, Sharp Cut-off.
4095	C	DH	1.25	0.1	-	100	-	100	2.0	-	-	-	B5G/F	Sub-miniature R.F. Beam Tetrode, Sharp Cut-off.
2299	C	DH	1.25	0.2	2.2	165	0.8	165	2.5	-	-	200	B8D/F	Sub-miniature Output Pentode.
2390	C	DH	1.4 2.8	0.2 0.1	2.2	165	1.0	150	2.0	0.1	-	-	B7G	Power Amplifier Pentode.
4097	C	DH	2.5 5.0	0.46 0.23	5.0	150	2.0	150	4.3	-	-	100	B9A	R.F. Beam Tetrode Power Amplifier.

(contd. over)

TETRODES and PENTODES (LOW ANODE VOLTAGE <500V) (continued)

C.V. No.	Availability Classn.	Cathode	Heater		Max. Pa (W)	Max. Va (V)	Max. Pg2 (W)	Max. Vg2 (V)	gM (mA/V)	Ra (MΩ)	Max. Vh-k (V)	Max. Freq. (Mc/s)	Base	Remarks
			Vh (V)	Ih (A)										
4039	P	IH	6.0	0.75	12	300	2.0	250	7	-	100	-	B9A	V.H.F. Power Amplifier Pentode.
2901	P	IH	6.3	0.2	1	300	0.2	200	1.85	2.5	100	-	B9A	)Low noise, low
4085	G	IH	6.3	0.2	1	300	0.2	200	1.85	2.5	100	-	B9A	) microphony
4086	G	IH	6.3	0.2	1	300	0.2	200	1.85	2.5	100	-	B9A/F	) Amplifier) Pentode.
4015	) C	IH	6.3	0.2	3	300	0.7	300	2.45	-	150	-	)B7G	)Variable H.F.
4084	)												)B7G/F	) Pentode.
3928	P	IH	6.3	0.15	0.55	165	0.45	155	3.2	-	200	-	B8D/F	Sub-miniature Pentode.
4011	P)	IH	6.3	0.175	1.65	200	0.55	155	3.2	-	100	-	)B7G	)
4098	G)												)B7G/F	)R.F. Pentode.

(contd. over)

TETRODES and PENTODES (LOW ANODE VOLTAGE <500V) (continued)

C.V. No.	Availability Classn.	Cathode	Heater Vh (V)	Heater Ih (A)	Max. Pa (W)	Max. Va (V)	Max. Pg2 (W)	Max. Vg2 (V)	gM (mA/V)	Ra (MΩ)	Max. Vh-k (V)	Max. Freq. (Mc/s)	Base	Remarks
4064	C	IH	6.3	0.35	3.0	300	1.5	300	4.0	0.1	150	-	B7G	H.F. Pentode with limiting diode.
4083	C	IH	6.3	0.35	3.0	300	1.5	300	4.0	0.1	150	-	B7G/F	H.F. Pentode without limiting diode.
4043	P	IH	6.3	0.45	13.2	350	2.1	310	4.1	-	90	-	B9A	Beam Tetrode.
4045	G	IH	6.3	0.45	13.2	350	2.1	310	4.1	-	90	-	B9A/F	Beam Tetrode.
4029	P	IH	6.3	0.45	3.7	165	0.4	155	4.2	-	200	-	B8D/F	Sub-miniature Power Amplifier Pentode.
4009	P	IH	6.3	0.3	3.3	330	0.7	135	4.4	1.0	150	-	B7G	Variable μ H.F. Pentode.
477	P	IH	6.3	0.15	0.75	165	0.35	155	4.5	0.175	200	-	B8D/F	Variable μ Pentode.
2721	C	IH	6.3	1.05	8.8	330	5.0	330	4.6	-	110	-	B9A	L.F. Pentode.

(contd. over)

TETRODES and PENTODES (LOW ANODE VOLTAGE < 500V) (Continued)

C.V. No.	Availability Classn.	Cathode	Heater Vh (V)	Heater Ih (A)	Max. Pa (W)	Max. Va (V)	Max Pg2 (W)	Max. Vg2 (V)	gM (mA/V)	Ra (MΩ)	Max. Vh-k (V)	Max. Freq. (Mc/s)	Base	Remarks
2432	C	IH	6.3	0.15	0.8	165	0.35	155	5.0	0.175	200	-	B8D/F	Sub-miniature, Sharp Cut-off, Pentode.
3929	P	IH	6.3	0.15	0.8	165	0.35	155	5.0	0.175	200	-	B8D/F	Sub-miniature, Sharp Cut-off, Pentode.
4010	P	IH	6.3	0.175	1.65	200	0.55	155	5.0	0.34	130	400	B7G	Sharp Cut-off R.F. Pentode.
4050	G	IH											B7G/F	
4002	G	IH	6.3	0.3	3.0	300	0.9	300	7.5	-	150	-	B7G/F	H.F. Pentode.
4014	P	IH											B7G	
4062	P	IH	6.3	0.64	9.0	300	3.0	300	9.5	0.023	250	-	(B7G	Low Impedance Pentode.
4065	G				12.0*	300*			12.0*	835 x 10^{-6}*			(B7G/F	*Anode and Screen Strapped as a Triode.

(contd. over)

TETRODES and PENTODES (LOW ANODE VOLTAGE <500V) (Continued)

C.V. No.	Availability Classn.	Cathode	Heater Vh (V)	Heater Ih (A)	Max. Pa (W)	Max. Va (V)	Max. Pg2 (W)	Max. Vg2 (V)	gM (mA/V)	Ra (MΩ)	Max. Vh-k (V)	Max. Freq. (Mc/s)	Base	Remarks
4055 4056	P G	IH	6.3	0.75	12.0 *12.5	300 300*	2.5	300	11.0 13.0*	-	-	-	B9A B9A/F	Video Output Pentode. *Anode and Screen strapped as a Triode.
2975	P	IH	6.3	0.76	13.0	330	2.2	330	13.3	-	100	-	B9A	Audio Output Pentode.
3998	P	IH	6.3	0.3	3.0	210	0.9	175	16.5	-	60	-	B9A	Wideband Amp. Pentode.
2276	C	IH	6.3	0.3	2.0	500	0.8	300	19.0	-	-	-	B9A	Single Stage Electron Multiplier.
1928	C	IH	12.6	0.15	3.3	330	0.7	330	4.0	1.5	-	-	B7G	Variable R.F. Pentode.

(contd. over)

TETRODES and PENTODES (HIGH ANODE VOLTAGE < 500V)

(In ascending order of Maximum Anode Dissipation)

C.V. No.	Availability Classn.	Max. Pa (W)	Max. Va (kV)	Max. Ia (A)	Max. Pg2 (W)	Max. Vg2 (kV)	gM (mA/V)	Max. Freq. (Mc/s)	Cathode	Heater Vh (V)	Heater Ih (A)	Base	Remarks
4040 4041	C	3.5	0.6	-	0.7	0.6	8.3	-	IH	6.3	0.3	B7G B7G/F	Pulse Tetrode.
2231	C	12.0	0.6	-	3.0	0.6	8.5	-	IH	6.3	1.2	B9A	Pulse Modulator
2659	C	15.0	3.5	-	3.0	0.85	5.2	-	IH	6.3	1.7	B8O	Pulse Modulator Beam Tetrode.
4082	P	15.0	6.0	7.5*	3.5	0.8	-	-	IH	6.3	1.32	B8O	Pulse Modulator Tetrode. *Pulse Current
4106	G	15.0	4.0	7.5*	3.5	0.85	-	-	IH	6.3	1.3	B8O	Pulse Modulator Beam Tetrode *Pulse Current
3523	P	20.0	0.6	0.14	0.25	0.25	-	-	IH	6.3	1.25	B8O	V.H.F. Beam Power Amplifier
391										6.3	0.9		
499	C	25	0.6	0.12	4.5	0.3	6.0	60	IH	19.0	0.3	B8G	Beam Power Amplifier
2220										12.0	0.47		

(Contd. over)

TETRODES and PENTODES (HIGH ANODE VOLTAGE > 500V) (Continued)

(In ascending order of maximum Anode Dissipation)

C.V. No.	Availability Classn.	Max. Pa (W)	Max. Va (kV)	Max. Ia (A)	Max. Pg2 (W)	Max. Vg2 (kV)	gM (mA/V)	Max. Freq. (Mc/s)	Cathode	Heater Vh (V)	Heater Ih (A)	Base	Remarks
428 2465	C	25	0.6	0.12	3.0	0.3	6.0	60	IH	6.3	0.9	B8G B8G/F	CV391 but with anode top cap.
4060	P	28	0.8	-	5.0	0.3	12.5	-	IH	6.3	0.9	B8O	Beam Tetrode.
5220	G	35	0.6	-	6.0	0.6	-	-	IH	6.3	1.6	B8O	Beam Power Output Pentode.
2752 2416	C P	60		-	8.0	1.5	-	-	IH	26.0	2.15	Special	Pulse Amplifier Tetrode.
1905	P	65	3.0	0.15	10	0.4	4.0	150	DH	6.0	3.5	B7A	Transmitting Tetrode
6045	G	90	0.8	-	10	0.3	31	-	IH	26.0	1.3	B7A	Beam Tetrode.
2130	P	125	3.0	0.225	20	0.6	2.45	120	DH	5.0	6.5	B5F	V.H.F. Transmitting Power Tetrode.
2519	P	150	1.25	0.25	2.0	0.3	-	500*	IH	6.0	2.6	Special	R.F. Power Tetrode. *1000 Mc/s at half rating.
2131	P	250	4.0	0.35	35	0.6	4.0	75	DH	5.0	14.1	B5F	Transmitting Tetrode.

(Contd. over)

TETRODES and PENTODES (HIGH ANODE VOLTAGE > 500V) (Contd.)

C.V. No.	Availability Classn.	Max. Pa (W)	Max. Va (kV)	Max. Ia (A)	Max. Pg2 (W)	Max. Vg2 (kV)	gM (mA/V)	Max. Freq. (Mc/s)	Cathode	Heater Vh (V)	Heater Ih (A)	Base	Remarks
2487	G	250*	2.0*	0.25	12	0.4*	-	500	IH	6.0	2.6	Special	R.F. Power Tetrode. *Class AB Conditions.
3879	C	400	4.0	0.35	35	0.8	-	-	DH	5.0	14.1	B5E	Transmitting Tetrode. Forced Air Cooling.
445	C	3500	6.0	2.5	-	1.5	6.0	30	DH	9.0	30	-	
2324	C	3550	7.5	-	200	-	7	30	DH	5.0	64	-	Transmitting Tetrode Air Cooled.

DOUBLE TETRODES

(Arranged in ascending order of Anode Dissipation (each anode))

C.V. No.	Availability Classn.	Max. Pa (W)	Max. Va (V)	Max. Pg2 (W)	Max. Vg2 (V)	Max. Mean Ik (mA)	Max. Freq.	Heater				Base	Remarks
								Parallel		Series			
								Vh (V)	Ih (A)	Vh (V)	Ih (A)		
2466	P	3	250	3	200	50	500	6.3	0.6	12.6	0.3	B9A	R.F. Power Beam Tetrode.
2798	P	5	300	1	200	50	225	6.3	0.84	12.6	0.42	B9A	R.F. Power Beam Tetrode
2799	P	10	600	0.5	250	55	600	6.3	1.3	12.6	0.65	B7A	R.F. Power Beam Tetrode.
2295	P	15	5000	3	850	-	-	6.3	2.25	12.6	1.125	B7A	Transmitting Modulator Beam Tetrode
2797	P	20	600	3.5	250	120	500	6.3	1.8	12.6	0.9	B7A	R.F. Power Beam Tetrode.

TRIODES (LOW ANODE VOLTAGE < 500V)

(Arranged in ascending order of Heater Voltage and then Mutual Conductance)

C.V. No.	Availability Classn.	Cathode	Heater Vh (V)	Heater Ih (A)	Max. Pa (W)	Max. Va (V)	Max. Ik (mA)	gM (mA/V)	Ra (kΩ)	μ	Max. Freq. (Mc/s)	Base	Remarks
451	C	DH	1.25	0.025	-	9	-	70μ A/V	14.3	1	-	-	)Sub-miniature
495	C	DH	1.25	0.013	-	25	0.25	80μ A/V	27.5	2.2	-	-	) Electrometer
2202	C	DH	1.25	0.015	-	15	-	80μ A/V	25	2	-	-	) Triode.
2269	C	DH	1.25	0.013	-	25	0.25	80μ A/V	27.5	2.2	-	-	)
2275	P	DH	1.25	0.2	2.6	170	22	3.75	4	14	-	B8D/F	Sub-miniature U.H.F. Triode.
4058	P	IH	6.3	0.15	3.8	330	21	2.2	7.7	17	150	B7G	R.F. Power Triode.
3930	P	IH	6.3	0.15	0.9	165	22	5.8	-	27	-	B8D/F	Sub-miniature Triode Oscillator.
273	P	IH	6.3	0.4	10	350	50	6.0	5	30	3000	-	)Disc Sealed Triode.
354	C	IH	6.3	0.4	10	350	50	6.5	10.8	70	2000	-	)
4070	C	IH	6.3	0.3	3.0	275	17	8.5	-	100	250	B7G	Ground Grid Triode.
397	C	IH	6.3	1.0	20	400	120	12.0	2.33	28	-	-	Disc Sealed Triode.
4038	G	) IH	6.3	0.95	15	300	120	12.0	0.38	4.5	-	)B9A/F	)Low Impedance
4079	P	)										)B9A	) Triode.

(contd. over)

TRIODES (LOW ANODE VOLTAGE <500V) (Continued)

C.V. No.	Availability Classn.	Cathode	Heater Vh (V)	Heater Ih (A)	Max. Pa (W)	Max. Va (V)	Max. Ik (mA)	gM (mA/V)	Ra (kΩ)	μ	Max. Freq. (Mc/s)	Base	Remarks
4081 4107	G	IH	6.3	0.37	-	200	20	14.0	4.15	52	-	)B7G/F)B7G	)Low Noise R.F.) Triode.
4105	G	IH	6.3	0.37	2.5	200	20	14.0	-	50	-	B9A	U.H.F. Low Noise Grounded Grid Triode.
5242	C	IH	6.3	0.3	2.5	250	20	14.0	-	-	-	B9A	Low Noise R.F. Grounded Cathode Triode.
5112	C	IH	6.3	0.45	7.0	350	45	47	1.0	-	-	B8G	Triode.
2397	P	IH	6.3	0.5	10	400 1000**	40	-	-	65	5200* 7000ƒ	-	Disc Sealed Transmitting Triode. *Oscillator or Amplifier ƒFrequency Multiplier **Pulsed Va.

TRIODES (HIGH ANODE VOLTAGE 500V)

(Arranged in ascending order of Max. Anode Dissipation)

C.V. No.	Availability Classn.	Max. Pa (kW)	Max. Va d.c. (kV)	Max. Va Pulse (kV)	gM (mA/V)	μ	Max. Freq. Mc/s	Cathode	Base	Remarks
2516	C	.1*	1	-	25	-	2460*	IH	-	*P out 12W at 2460 Mc/s.
436	C	.45	1	6	30	80	1000	IH	-	Disc Seal Triode, Air Cooled.
2245	C	1	3	-	13	19	120	DH	-	V.H.F. Triode Air Cooled.
2163	C	1.5	-	11	50	45	-	IH	-	Disc Seal, Triode.
570	C	5	10	-	5.8	26	-	DH	-	Water Cooled.
2323	C	8	8.5	-	10	28	100	DH	-	Air Cooled.
2159	C	12	15	-	-	45	20	DH	-	Air Cooled.
2322	C	15	12	-	23	45	50	DH	-	Air Cooled.
1734	C	15	12	-	-	23	22	DH	-	Water Cooled.
446	C	20	13	-	23	35	30	DH	-	Single Ended Triode, Water Cooled.

DOUBLE TRIODES

(Arranged in ascending order of Anode Dissipation (each anode))

C.V. No.	Availability Classn.	Cathode	Heater				Max. Pa (W)	Max. Va (V)	gM (mA/V)	Ra (kΩ)	μ	Max. Freq. (Mc/s)	Base	Remarks
			Parallel		Series									
			VH (V)	Ih (A)	Vh (V)	Ih (A)								
3986	G	IH	6.3	0.3	-	-	0.7	165	5.4	-	35	-	B8D/F	Sub-miniature.
4051	G	IH	6.3	0.6	12.6	0.3	1.0	300	1.3	23.85	31	-	B9A/F	For D.C. Amplifier Applications.
4004	P	IH	6.3	0.3	12.6	0.15	1.1	330	1.6	62.5	100	-	B9A	High Impedance
4035	G	IH	6.3	0.3	12.6	0.15	1.1	330	1.6	62.5	100	-	B9A/F	Double Triode.
4031	C	IH	6.3	0.45	-	-	1.6	330	5.6	6.8	38	250	B7G	
4076	C	IH	6.3	0.45	-	-	1.6	330	5.6	6.8	38	250	B7G/F	
4108	G	IH	6.3	0.335	-	-	1.65	100	12.5	-	33	-	B9A	
4109	G	IH	6.3	0.335	-	-	1.65	100	12.5	-	33	-	B9A/F	
4110	C	IH	6.3	0.335	-	-	1.65	100	12.5	-	33	-	B9A	Low Noise.
4111	C	IH	6.3	0.335	-	-	1.65	100	12.5	-	33	-	B9A/F	Low Noise.
2492	C	IH	6.3	0.3	-	-	1.9	250	12.5	-	33	-	B9A	Low Noise.
2493	C	IH	6.3	0.3	-	-	1.9	250	12.5	-	33	-	B9A	Low Noise.
5212	G	IH	6.3	0.3	12.6	0.15	2.8	380	5.5	10.9	60	-	B9A	
4024	C	IH	6.3	0.3	12.6	0.15	2.8	380	5.5	10.9	60	-	B9A	
4033	C	IH	6.3	0.3	12.6	0.15	2.8	380	5.5	10.9	60	-	B9A/F	
4003	P	IH	6.3	0.3	12.6	0.15	3.0	330	2.2	7.7	17	-	B9A	Low Impedance
4034	G	IH	6.3	0.3	12.6	0.15	3.0	330	2.2	7.7	17	-	B9A/F	Double Triode.

(contd. over)

DOUBLE TRIODES (Continued)

C.V. No.	Availability Classn.	Cathode	Heater				Max. Pa (W)	Max. Va (V)	gM (mA/V)	Ra (kΩ)	μ	Max. Freq. (Mc/s)	Base	Remarks
			Parallel		Series									
			Vh (V)	Ih (A)	Vh (V)	Ih (A)								
6091	C	IH	6.3	0.4	12.6	0.2	3.5	500	6.2	10.0	62	-	B9A	Separate Cathodes.
4068	P	)											)B9A	
4069	G	)IH	6.3	0.6	12.6	0.3	5.0	300	2.3	-	32	-	)B9A/F	
5008	G	IH	6.3	2.5	-	-	13.0	250	7.0	-	2	-	Large Wafer Octal*	*With metal sleeve.

HEPTODES and TRIODE HEPTODES

C.V. No.	Availability Classn.	Type	Heater		Max. Va (V)	Max. Pa (W)	Max. Vg2+g4 (V)	Max. Pg2+g4 (W)	Conversion Conductance (μA/V)	Base	Remarks
			Vh (V)	Ih (A)							
2128	P	Triode-Heptode	6.3	0.3	330 275	1.9 0.9	140 -	1.1 -	2,400 3,700*	B9A	*Va = 100V, Ia = 13.5 mA for triode.
4012	P	Heptode	6.3	0.3	330	1.1	110	1.1	470	B7G	Max. Ik = 15.5 mA.
4037	G	Heptode	6.3	0.3	330	1.1	110	1.1	470	B7G/F	Max. Ik = 15.5 mA.

NOISE SOURCES (DISCHARGE TUBES)

C.V. No.	Availability Classn.	Nominal Useful Feq. Range (Mc/s)	Nominal Available Noise Power (db)	Max. Operating Current (mA)	Remarks
1881	P	3000 to 12000	15.5	250	
2479	C	7000 to 40000	15.25	50	

NOISE SOURCES (DIODES)

C.V. No.	Availability Classn.	Max. Freq. Range (Mc/s)	Mean Saturated Ia (mA)	Measured at Vf (V)	Max. V for Saturation (V)	Max. Pa. (W)	Base	Remarks
2171	P)	500	5.0	3.7	40	2	) B7G	
2417	C)		*20.0	*4.4	*200		) B7G/F	*Reduced Life (300 hrs.)
2341	P	1000	87.5	3.0	200	10*	-	Coaxial Diode, *Dissipation 40W with forced air cooling.
~~2361~~								
2398	C	500	45.0	5.6	200	3.5	B9A/F	

INERT GAS FILLED TRIODES AND TETRODES

(In ascending order of Mean Anode Current)

C.V. No.	Availability Classn.	Cathode	Heater Vh (V)	Heater Ih (A)	Mean Ia(A)	Max. Peak Ia (A)	Max. Peak Va (kV)	Max P.I.V. (kV)	Base	Class	Remarks
1949	G	IH	6.3	0.25	0.025*	0.11	0.35	0.35	B7G	Triode	Thyratron *Max d.c. Ia
1992	C	Cold	-	-	0.025	0.1	0.235*	-	B8O	Triode	* Vg = oV
2296	C	Cold	-	-	0.04to 0.1	0.25	0.38	0.35	B8O	Triode	
2349	C	Cold	-	-	0.05	0.25	0.4	0.35	B7G	Tetrode	For stroboscopic service
4018	P	IH	6.3	0.6	0.1	0.5	0.65	1.3	B7G	Tetrode	For relay rectifier and modulator serviee.
2210	P	DH	2.5	12	3.2	40	1.5	1.5	B4D	Triode	Thyratron
2215	P	DH	2.5	21	6.4	80	1.5	1.5	B4D	Triode	

COLD CATHODE GAS FILLED VOLTAGE STABILISERS

(Arranged in ascending order of mean operating voltage)

C.V. No.	Availability Classn.	Maintaining Voltage (Mean) (V)	Max. Striking Voltage (V)	Anode Current Min. (mA)	Anode Current Max. (mA)	Regulation at Ia.min. to Ia.max. (V)	Base	Remarks
2208	C	50	90	0.1	0.5	5	-	Sub miniature
2266	C	60*	85	0.05	0.65	3†	-	Sub miniature * Ia = 0.5 mA. † Ia = 0.3 to 0.5mA
2213	P	60*	85	0.3	1.0	3†	-	Sub miniature * Ia = 0.5 mA. † Ia = 0.3 to 0.5mA.
4030	C	75	115	5.0	60	6.5	B8C/F	
4080	P	78	110	2.0	60	8	B7G	
6004	C	85	104	0.5	1.0	1	-	Sub miniature
4066	P	85	125	0.5	3.5	3	-	Sub miniature
4048	P	85	115	1.0	10.0	4	B7G	
4054	G	85	115	1.0	10.0	4	B7G/F	
3897	G	95	125*	5.0	25.0	5	B8D/F	* 175V in darkness
4052	C	108	133	2.0	15.0	3	B7G/F	
422	C	108	120*	5.0	45.0	5	B8G	*With Priming Anode at 150V through 0.1 M ohm
4028	P	133	210	5.0	30.0	4	B7G	
4053	C	150	180	2.0	15.0	4.5	B7G/F	
4020	P	150	225	5.0	30.0	5	B7G	
4100	G	150	165	5.0	30.0	10	B7G	
1832	C	150	180	5.0	30.0	6	B7G	
395	C	150	170*	5.0	45.0	5	B8G	*With Priming Anode at 200V through 0.1 M ohm.
4047	C	304	400	2.0	4.0	1	B7G/F	

CORONA STABILISER VALVES

C.V. No.	Availability Classn.	Operating Voltage (V)	Min. Stable Current (μA)	Max. Stable Current (μA)	Regulation (250-275μA) (V)	Base	Remarks
2456	C	350	5	300	1.0	B7G	
2457	C	400	5	300	1.0	B7G	
2458	C	600	10	300	1.5	B7G	
2459	C	800	15	400	2.0	B7G	
2460	C	1000	20	400	2.5	B7G	
2461	C	1200	20	500	3.0	B7G	
2462	C	1400	20	500	3.5	B7G	
6065	C	1600	20	600	4.5	B7G	
6066	C	1800	20	600	5.5	B7G	
6067	C	2000	20	600	6.5	B7G	

PHOTOMULTIPLIERS and PHOTOCELLS

(In order of C.V. No.)

C.V. No.	Availability Classn.	Type	Max. Va (V)	Minimum Sensitivity (μA/Lumen)	Measured at Va (V)	Measured at Light Flux (L)	Base	Remarks
337	P	Nine Stage Electron Multiplier	1100	7.5	100	0.1	Sub-magnal 11 pin Small Shell	Max. Ia = 2.5 mA.
2132	P	Caesium Antimony. Vacuum	110	30 27.5	100 50	0.04 0.04	B7G	Max. Ik = 5 μA.
2133	P	Caesium on Oxidised Silver. Gas filled.	100	72 10	90 25	0.02 0.02	B7G	Max. Ik = 2 μA
2134	P	Caesium on Oxidised Silver. Vacuum	110	13.5 11	100 25	0.02 0.02	B7G.	Max. Ik = 10 μA.
2270	C	Caesium Antimony. Gas filled	100	75 21	90 25	0.02 0.02	B7G	Max. Ik = 2.5 μA.
2316	C	Eleven Stage Electron Multiplier.	1920*	20	300	0.01	EMI, Pressed Glass Base †	*Max. inter-stage Voltage = 200V. † Drg. No. 6260 D.21
2428	C	Caesium Antimony Vacuum	150	2.5	108	0.1 μA	B9G	Max. Ik = 0.2 μA

HYDROGEN THYRATRON MODULATORS

(Arranged in ascending order of Max. Peak Anode Voltage)

C.V. No.	Availability Classn.	Ratings		Conditions for Ratings			Min. Trigger Pulse Volt (V)	Vgdc (-V)	Base	Remarks
		Max. Peak Va (kV)	Max. Peak Ia (A)	Rate of Rise of Current (A/μS)	Max. tp (μS)	p.r.f. (p.p.s.)				
6007	P	3.0	35	750	5.0	2800	-	-	Medium 4 pin	With top cap
3629	G	3.0	35	750	5.0	-	175	-	Medium 4 pin	
6015	C	8.0	90	1500	-	---	-	-	-	Flying lead, tetrode
1787	P	8.0	90	1000	0.5	3000	175	200	B4D	With top cap (CT3)
6051	G	16.0	325	2500	-	-	-	10	B4M - Super Jumbo	Low Jitter short recovery tetrode.
6022	G	16.0	325	1500	2.0	1000	200	-	Super B4M Jumbo	
2520	P	16.0	325	1500	1.0	1000	200	200	B4D	With top cap (CT3)
2418	C	18.0	700	5000	5.0	2500	500	100	Special	With top cap
6118	C	As CV 2418 with reservoir requiring 22VA nom.								
3518	C	25.0	1000	5000	-	5000	700	-	Special	With top cap (CT3)
3521	G	25.0	500	2500	2.0	500	-	-	Special	With top cap
6026	G	25.0	200	7500	5.0	1500	1000	110	Special	

MAGNETRONS

(In ascending order of Nominal Frequency and Mean Input Power)

C.V. No.	Availability Classn.	Nominal Frequency (Mc/s)	Max. Mean Input Power (W)	Max. Pulse Length (μ S)	Typical Operating Conditions					Remarks
					Min. Peak P.out.(kW)	Max. Peak Va. (kV)	Peak Ia (A)	Duty Cycle	tp (μ S)	
1916	P	2800	1200	2.5	400	28	40	-	2	
3611	G	2800	1200	2.5	400	30	70	0.001*	2.5*	*maximum
3958	~~G~~ C	3000	1300	2.5	400	32.5	70	0.001*	2.5*	*maximum
1495	C	3010)								
1496	C	3030)								
1497	C	3050)								
1498	C	3070)	500	-	200	21.5	22.5	0.001	0.5	
1499	C	3090)								
1500	C	3110)								
5011	G	3200	1300	2.5	400	32.5	70	0.001*	2.5*	*maximum
6072	C	8800	60	6.0	0.017	0.8	0.11	0.5*	4.0	*maximum
6108	C	8800	82.5	2.5	16	6*	5.5*	0.0025*	2.5*	*maximum
5134	G	9150	230	3.4	40	-	15.5	0.0011	3.4	
370	C	9240	82.5	2.5	17.5	6	5.5*	0.0025	2.5	Packaged * maximum
2473	P	9240	750	6.0	225	-	27.5	0.001	0.5	
2421	C	9375	6	5.0	18	1.15	0.15	-	0.5)	Packaged
2420	C	9375	60	-	5.0	1.1	0.1	-	-)	
5135	G	9375	80	2.5	18	8*	8*	0.0025*	2.5*	Packaged * maximum
3676	P	9375	82.5	2.5	14	6*	5.5*	0.0025*	2.5*	*maximum
2313	G	9375	150	-	50	14	12	-	0.6	
5018	G	9375	240	5	70	16*	15*	-	5.0	*maximum

MAGNETRONES (Continued)

C.V. No.	Availability Classn.	Nominal Frequency (Mc/s)	Max. Mean Input Power (W)	Max. Pulse Length (μS)	Typical Operating Conditions					Remarks
					Min. Peak P.out.(kW)	Max. Peak Va. (kV)	Peak Ia (A)	Duty Cycle	tp (μS)	
2284	P	9375	750	6	225	-	27.5	-	-	
6034	C	9545	360*	1	100	17	20	0.001	0.25	) *tp=½μS
6035	C	9600	360*	1	100	17	20	0.001	0.25	)Packaged *tp=½μS
2412	P	9642	635	6	225	-	10	0.0004	0.2	) *tp = 0.75 μS
6036	C	9655	360*	1	100	17	20	0.001	0.25	) *tp = μS
2350	C	35000	140000*	0.25	6	-	10	0.0004	0.2	Packaged *peak

VELOCITY MODULATED TUBES

KLYSTRONS

(Arranged in ascending order of Minimum Frequency)

C.V. No.	Availability Classn.	Operating Frequency Range (Mc/s)	Min. R.F. Power Output (mW)	Max. Resonator Voltage (V)	Max. Resonator Dissipation (W)	Reflector Voltage Range (-V)	Base	Remarks
2116	C	1800-4500	100	250	8	55-350	B7G	
6071	P	2700-4100	100	350	16	500*	Pee Wee 4	*Maximum
6001	C	3450-3550	30	2200	24	150-375	B8O	For waveguide WG. No. 22
2187	C	3600-4200	1000	1100	-	140-260	-	
2346	P	8000-10000	30	300	12	75-250	B7G	For waveguide WG. No. 16
6003	P	8500-9000	30	400	18	140-255	Special	
2494	C	8500-9600	8	350	-	0-500	-	
2304	C	9000-10000	30	400	20	215-415	B8O	Waveguide output for UG. 40/U coupler

COAXIAL LINE OSCILLATORS

(Arranged in ascending order of Minimum Tuning Range)

C.V. No.	Availability Classn.	Tuning Range		Min. Power Output (mW)	Resonator Voltage Range (V)	Anode Voltage Range (V)	Max. Screen Voltage (V)	Max. Mean Power Output (W)	Base	Remarks
		Min. (cms)	Max. (cms)							
485	C	6.17*	6.55*	250	209-231	219-251	209	15	B7G	*4580 to 4860 Mc/s
2422	C	6.2	6.8	300	303-321	313-341	75-350	25*	B7G	*Anode + Resonator
2190	C	7.14	11.11	350	250*	214-338	368	18	B7G	*At 9 cms.
2189	C	7.4	7.5	350	240-270	300	400	18	B7G	
2221	C	7.5	11.5	500	295-335	150-420	400	15	B7G	

(Arranged in ascending order of Minimum Operating Frequency)

C.V. No.	Availability Classn.	Operating Frequency Range (Mc/s)	Min. Power Output (mW)	Delay Line Voltage Range (kV)	Max. Delay Line Diss. (W)	Max. Va (V)	Max. Ia (mA)	Max. -Vg (V)	Base	Remarks
2381	G	2400-4500	20	0.15-1.17	60	200	30	100	B7D	50 Ω output connector.
6023	G	2400-4500	20	0.15-1.17	60	200	30	100	B7D	50 Ω output connector.
6076	C	4000-7500	20	0.15-1.17	-	300	3	200	Special 6 pin	50 Ω output socket.
2393	G	7000-11500	20	0.3-1.5	50	300	10	250	A7-13	50 Ω output connector.
6024	G	7000-11500	20	0.3-1.5	50	300	10	250	A7-13	50 Ω output connector.
6112	C	26500-40000	10	0.68-3.0	-	700	2	450	Flying Lead	Output connector via No. 22 Waveguide

TRAVELLING WAVE AMPLIFIERS

(Arranged in ascending order of Minimum Operating Frequency)

C.V. No.	Availability Classn.	Operating Frequency Range (Mc/s)	Max. Collector		Max. Helix		Min.Sat. Power Output (mW)	Min. Gain (dB)	N.F. (dB)	Base	Remarks
			Volt (kV)	Current (mA)	Volt (kV)	Current (μA)					
6106	C	1200-1400	0.6	0.250	0.4	20	2	25	7.5	B80	
2499	C	2500-4100	0.55	5	0.475	500	50	28	21.5	B9A	
6090	C	2500-4100	0.8	0.6	0.6	50	3	38	10	Special 9 pin	
6085	C	2500-4100	3	20	2.7	1500	500	20	30	B80	
6117	C	2700-3250	3	25	2.5	1600	-	19	-156*	B80	*dB/c/s
6098	C	4100-7000	0.8	0.4	0.65	25	3.5*	37	10	B80	*4.5mW (4.5 to 6.5k Mc/s)
6087	C	7000-11500	1.7	0.6	1.6	100	3	20	24	Special 7 pin	
6096	C	7000-11500	2.8	10	2.8	2000	100	-	-	Special 7 pin	

GAS SWITCHES

T.R. CELLS

(Arranged in ascending order of Min. Frequency)

C.V. No.	Availability Classn.	Operating Frequency Range (Mc/s)	Max. Peak Power (kW)	Remarks
2285	C	2500-4100	2500*	*Minimum. For Polarisation-twist T.R. systems.
713	G	2700-3400	50*	*Nominal
2378	C	2727-3158	5	For No. WG 10. waveguide.
1297	C	2925-3075	500	For use in tunable cavity resonator
293	C	2925-3075	500	
497	C	2935-3060	500	For 3½" x 1⅝" waveguide.
2429	G	3288-3324	0.3	For use in either No. WG.10 or 11 waveguide.
			500*	*When used in conjunction with CV 2430 Pre-TR.Sw.
2826	G	8490-9578	4*	*Minimum
2307	C	8500-9050	200	Broad-band.
2312	P	8500-9300	250	Twin-primer, Broad-band.
2480	G	8500-10,000	200	Broad-band.
2359	C	8950-9600	10	Broad-band passive protection cell.
2306	C	9000-9600	200	Broad-band
2311	P	9180-10000	250	Twin-primer, Broad-band.
2330	C	34000-36000	20*	Tunable *Nominal

GAS SWITCHES (Contd.)

PRE T.R. CELLS

(Arranged in ascending order of Min. Frequency)

C.V. No.	Availability Classn.	Operating Frequency Range (Mc/s)	Max. Peak Power (kW)	Max. Mean Power (kW)	Remarks
6028	G	2000-4000	2500	3	
6110	C	2000-4000	6000	12	
2482	C	2500-12000	500	0.5	
6086	C	2500-12000	250	0.25	
2157	C	2727-3158	-	2000*	*Switched R.F. Power
2430	G	3288-3324	500	0.5	

T.B. (A.T.R.) CELLS

(Arranged in ascending order of Min. Frequency)

C.V. No.	Availability Classn.	Operating Frequency Range (Mc/s)	Min. Transmitter Peak Power (kW)	Remarks
3877	G	2660-2940	20	
2309	C	8500-9050	5	Broad Band
3628	G	9000-9600	4*	*Max. 250 kW
463	C	9020-9140	5	Broad Band
2308	C	9050-9060	5	Broad Band
462	C	9180-9300	5	Broad Band
461	C	9315-9435	5	Broad Band
6070	G	9315-9435	200	Broad Band
2274	C	9500-9700	5	Broad Band
577	G	23760-24240	4	Broad Band

GAS SWITCHES (Contd.)

POWER LIMITING GAS CELLS

C.V. No.	Availability Classn.	Operating Frequency Range (Mc/s)	Max. Peak Power (kW)	Remarks
2484	C	7000-11500	100	
6006	C	7000-11500	100	
6073	P	7000-11500	100	

PULSED ATTENUATORS

C.V. No.	Availability Classn.	Operating Frequency Range (Mc/s)	Max. Peak Power (W)	Remarks
6089	C	2500-4000	100*	*Excitation
2379	C	2755-2915	3	
2483	C	8000-12000	80*	*Excitation

GAS FILLED POWER (STANDING WAVE) INDICATOR TUBES

C.V. No.	Availability Classn.	Frequency Band	Peak Powers Measured (KW)	Remarks
263	C	S and X 2,800 to 10,000 Mc/s	1 max.	
359	C	S	200 to 400	
360	C	S	450 to 800	

COLD CATHODE GAS FILLED RELAY VALVES

C.V. No.	Availability Classn.	Main Gap Breakdown Voltage (V)	Control Gap (Trigger) Breakdown Voltage (V)	Max. Peak Cathode Current (mA)	Max. Mean Cathode Current (mA)	Max. Trigger Current for Reliable Operation (μA)	Remarks
413	C	150	70*	50	30	5	*Anode Floating
2174	C	230	75*	50	30	10	*Anode Floating Va = 200 Vdc.
2236	C	285	146*	10	2.5	10	*Va = 260 Vdc.
2255	C	170	-	10	2.5	4	
2486	C	220	68	-	1.0	-	Subminiature F/L
6016	C	275	70-85	40	5.0	-	B7G

PROTECTIVE SPARK GAPS

(Arranged in ascending order of Max. Breakdown Voltage)

C.V. No.	Availability Classn.	Max. Breakdown Voltage (kV)	Max. Mean Ia (mA)	Max. Peak Ia (A)	Base	Remarks
2248	P	1	2	50*	None	*Approximately Sine waveform pulse, 40 μ S duration at half amplitude.
2249	P	1.25	2	50*	None	*Approximately sine waveform pulse, 40 μ S duration at half amplitude.
2250	P	1.5	2	50*	None	*Approximately sine waveform pulse, 40 μ S duration at half amplitude.
2251	P	1.75	2	50*	None	*Approximately sine waveform pulse, 40 μ S duration at half amplitude.
2252	F	2	2	50*	None	*Approximately sine waveform pulse, 40 μ S duration at half amplitude.
233	C	5.5	2	50*	B80	*Voltage pulse 1μ S duration and between 50 and 1500 p.p.s.
402	C	8	2	50*	B80	*Voltage pulse1 μ S duration and between 50 and 1500 p.p.s.

MISCELLANEOUS

(See Specifications for details)

Class of Valve	Availability Classification		
	Preferred Types	Guidance Types	Current Types
Decade Scaling Tubes	-	CV6044, CV6100	CV5143
Decade Selector Tubes	CV2325	-	CV6103
Ignitrons	-	-	CV1742, CV3710
Mercury Arc Rectifiers (Hg Pool Cathode)	-	-	CV3710
Monitor Diodes	-	-	CV6005, CV6107
Series Stabilisers	CV4062	CV4065	-
Shunt Stabilisers (Triode)	-	-	CV6097
Tuning Indicators	-	-	CV394, CV2747
Trigger Tubes	-	CV2434	CV2224
Triggered Sparks Gaps	-	-	CV6008
Voltage Indicators	-	CV6094	-

May, 1963

CATHODE RAY TUBE

SCREEN CODE

First Letter Colour of Flash	Second Letter Colour of Afterglow	Third Letter Length of Afterglow
B = Blue	B = Blue	L - 5 secs upwards
G = Green	G = Green	M - 1 sec. to 5 sec.
Y = Yellow	Y = Yellow	S - 0.1 sec. to 1. sec.
R = Red	R = Red	N - 1 millisec. to 0.1 sec.
O = Orange	O = Orange	K - less than 1 millisec.
W = White	W = White	
U - Ultra Violet		

This code will in due course be replaced by an amended Code in which the first two letters are unchanged and the third will be replaced by a number selected according to the following table. The afterglow is defined as the time taken from the cessation of excitation for the brightness to decay from a level of one equivalent Foot Candle to one per cent of that value.

T A B L E

Symbol	Length of Afterglow		Description
	Min.	Max.	
1	-	10 µs	Killed. (K)
2	10 µs	100 µs	Ultra short (US)
3	100 µs	1000 µs	Very short (VS)
4	1 ms	10 ms	Short (S)
5	10 ms	100 ms	Medium short (MS)
6	100 ms	1000 ms	Medium (M)
7	1 s	10 s	Medium long (ML)
8	10 s	100 s	Long (L)
9	100 s	-	Very long (VL)

e.g. The blue photographic screen BBK will become BB1 and the double layer afterglow BYL will become BY8.